SIEMENS NIXDORF

SCENIC Mobile

Operating Manual

Mobile 500 Mobile 700

Mobile 500 / Mobile 700

Dieses Handbuch wurde auf Recycling-Papier gedruckt.
This manual has been printed on recycled paper.
Ce manuel est imprimé sur du papier recyclé.
Este manual ha sido impreso sobre papel reciclado.
Questo manuale è stato stampato su carta da riciclaggio.
Denna handbok är tryckt på recyclingpapper.
Dit handboek werd op recycling-papier gedrukt.

Herausgegeben von/Published by
Siemens Nixdorf Informationssysteme AG
D-33094 Paderborn
D-81730 München

Bestell-Nr./Order No.: ***A26391-K75-Z100-4-7619***
Printed in the Federal Republic of Germany
AG 996 9/96

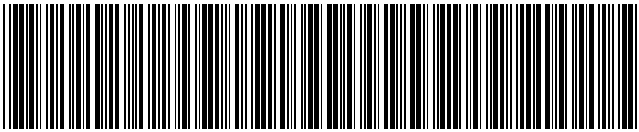

A26391-K75-Z100-1-7619

Is there ...

any technical problem or other question you need clarified?

Please contact:

- one of our IT Service Shops
- your sales partner
- your sales office

The addresses of our IT Service Shops can be found in the guarantee coupon booklet.

... anything you want to tell us about this manual?

Please send us your comments quoting the order number of the manual.

Siemens Nixdorf Informationssysteme AG
User Documentation Department,
BS2000 OS ID4 Otto-Hahn-Ring 6
D-81730 München
Fax: +49 89 636 40443

Mobile 500 Mobile 700

Operating Manual

Introduction

Important notes

Preparation for use and operation

Settings in BIOS Setup

Property and data protection

Troubleshooting and tips

System expansions

Connecting external devices

Technical data

Index

February 1997 edition

Your training needs?

The Siemens Nixdorf Training Centers offer you a wide range of training courses in information technology and on IT products and other subjects - onsite near to your workplace or offsite at one of our training centers.

Contact us for information on consulting, course schedules and selfstudy material - Either fax (which is the fastest way):
Fax: +49 89 636 42945

Or write to:

Siemens Nixdorf Informationssysteme AG
Training Center, Beratungsservice D-81730
München

VESA and DPMS are trademarks of Video Electronics Standards Association.

Intel is a registered trademark, Pentium is trademark of Intel Corporation, USA.

Microsoft, MS, MS-DOS, Windows and Windows NT are registered trademarks of Microsoft Corporation.

OS/2 and PS/2 is a registered trademark of International Business Machines, Inc.
All other trademarks referenced are trademarks or registered trademarks of their respective owners, whose protected rights are acknowledged.

Copyright © Siemens Nixdorf Informationssysteme AG 1997.

All rights, including rights of translation, reproduction by printing, copying or similar methods, even of parts are reserved.

Offenders will be liable for damages.
All rights, including rights created by patent grant or registration of a utility model or design, are reserved.
Delivery subject to availability. Right of technical modification reserved.

Contents

Introduction **1**
Notational conventions 2

Important notes **3**
Safety 3
Notes on installing and removing boards 7
Manufacturer's notes 7
Energy saving 7
Disposal and recycling 8
CE certificate 8
RFI suppression 8
FCC Class B Compliance Statement 9
Important notice concerning power cord selection 10
For the United States and Canada 10
Optimum battery capacity 11
On the move with the notebook 12
Cleaning the notebook 13

Preparation for use and operation **15**
Unpacking and checking the delivery 15
Choosing where to set up your notebook 16
Preparing the notebook for use 16
Switching on the notebook 18
Switching off the notebook 19
Displays and input devices 20
Displays 20
Touchpad and touchpad buttons 23
Keyboard 24
Key combination 27
Floppy disk drive 30
Removing the floppy disk drive 30
Installing the floppy disk drive 31
Working with floppy disks 32
Drives in the left slot 33
Installing a drive 33
Removing a drive 35
Operating the CD-ROM drive 35
Operating the MOD drive 38
PC cards (PCMCIA cards) 40
Zoomed video port 41

Installing a PC card 41
Removing a PC card 42
Microphone and loudspeaker 42
Using power-management features 43
Long Life mode 43
Doze mode 43
Standby mode 44
Suspend mode 45
Display 46
Hard disk's power-management feature 47
Loudspeaker 47
Volume adjustment 48
Changing display settings 48
Switching between normal and reverse video 48
Switching between internal and external display 48
Setting the display contrast 49
Setting the display brightness 49
The battery 50
Charging, caring for and maintaining the battery 50
Learning cycle for batteries under Windows 95 54
Inserting and removing batteries 55

Settings in BIOS Setup 59
Starting BIOS Setup 60
Operating BIOS Setup 61
Main menu - Making system settings 62
System Time/System Date 62
Diskette A: - Floppy disk drive 63
IDE Adapter 0 Master/IDE Adapter 0 Slave - hard disk drive 63
Display Device Selection 66
PS/2 Mouse 66
Video System - External monitor type 67
Boot Options - System startup options 67
System Memory - Main memory 68
Extended Memory 68
Advanced menu - Making advanced system settings 69
Integrated Peripherals - Ports and controllers 70
PCI Devices - PCI configuration 75
Memory Cache - Cache 78
Plug & Play O/S - Plug&Play functionality 79
Reset Configuration Data 80
Large Disk Access Mode - Hard disk access 80
Security menu - Setting up the security features 81
Supervisor is/User Password is - Password display 81

Set Supervisor Password 81
Set User Password 82
Password on boot - Password query during system startup 82
Diskette access - Access privilege for disk drive 82
Power menu - Setting energy saving functions 83
APM - Enabling the APM Interface 84
PM Control - Effectiveness of the energy saving functions 84
Power Savings - Extent of energy saving functions 84
Standby Timeout - Standby mode 84
Suspend Timeout - Suspend mode 85
Hard Disk Timeout - Hard disk energy saving functions 85
Video Timeout - Display energy saving functions 85
Hardware Dozemode 86
Battery Low Suspend - Suspend mode for low battery capacity 86
Suspend Mode 86
Resume On Modem Ring - Switching on for modem ring 87
Resume On Time - Switching on at a fixed time 87
Resume Time - Setting the switch-on time 87
Docking menu - Configuring the MobiDock 88
Diskette B: - Setting the external floppy disk drive 88
IDE Adapter 1 Master/IDE Adapter 1 Slave - Setting external hard disk drives 89
Boot Hard Disk - Specifying hard disk for system load 89
Integrated IDE Adapter -Setting IDE disk drives controller of the MobiDock .. 89
SCSI Controller - Setting the SCSI controller of the MobiDock 89
Docking Station Password is - Password display 90
Set Docking Station Password -Setting the Docking Station Password 90
Boot menu - Defining boot sequence 91
Exit - Exiting BIOS Setup 92
Save Changes & Exit 92
Exit Without Saving Changes 92
Get Default Values 92
Load Previous Values 92
Save Changes 93

Property and data protection 95
Security functions under Windows 95 95
BIOS Setup security functions 95
Setting supervisor password 96
Setting user password 98
Setting docking station password 99

Troubleshooting and tips 101
The POWER LED does not light up when the device is switched on 101

The notebook's display remains blank ... 102
The notebook's display is difficult to read ... 103
The external monitor stays blank ... 103
The external display is blank or the image is unstable ... 104
The notebook stops working ... 104
The touchpad does not work ... 105
The mouse does not work ... 105
The floppy disk cannot be written ... 106
The battery drains quickly or becomes hot ... 106
The notebook's date or time is incorrect ... 106
The printer does not print ... 107
The battery symbol is flashing ... 107
Acoustic warnings ... 108
Error messages on the screen ... 108
Restoring the hard disk contents under Windows 95 ... 110

System expansions ... 111
Memory expansion ... 111
Installing memory modules ... 112
Removing memory modules ... 114
Replacing a built-in hard disk ... 116

Connecting external devices ... 119
Port covers and connectors ... 120
Connecting devices with serial or parallel port ... 122
Connecting an external monitor ... 122
Connecting the mouse ... 123
Connecting an external keyboard ... 123
Connecting external audio devices ... 123
Connecting a MobiDock or QuickPort/QuickPort Plus ... 124
Transferring data with the infrared interface ... 125

Technical data ... 127
Notebook Mobile 500 ... 127
Battery - Mobile 500 ... 129
Notebook Mobile 700 ... 130
Battery - Mobile 700 ... 132
Power adapter ... 132
Car adapter ... 133
CD-ROM drive ... 133
Interrupts, I/O addresses, and DMA assignment ... 134
Port assignment ... 137
DC jack (DC IN) ... 137

Port for external keyboard and PS/2 mouse 137
Serial port 138
Port for external monitor 139
Parallel port 140
Pinout in SPP mode (Standard Parallel Port) 140
Pinout in EPP mode (Enhanced Parallel Port) 141
Pinout in ECP mode (Enhanced Capabilities Port) 141
Keyboard layouts 142
Czech 142
Danish 142
French 142
German 143
Greek 143
Hungarian 144
Italian 144
Netherlands 145
Norwegian 145
Polish 146
Portuguese 147
Russian 147
Slovakian 148
Spanish 148
Swedish 149
Swiss 149
Turkish 150
UK English 150
US English 151

Index 152

Introduction

Innovative technology and ergonomic design make this notebook the ideal user-friendly and reliable travel companion. The operating system is pre-installed on the hard disk to facilitate the procedure when you use your notebook for the first time.

The energy-saving processor and the energy-saving functions that can be configured allow you to use the battery capacity of your notebook effectively. By using an additional battery pack instead of the disk drive, you can double the notebook's mobile operation time.

The notebook is equipped with a 8 Mbytes main memory. The main memory of the Mobile 500 notebook can be upgraded up to 40 Mbytes, the main memory of Mobile 700 notebook can be upgraded up to 72 Mbytes. Data is saved on an Enhanced-IDE hard disk drive. Your notebook is also equipped with a 3 1/2-inch disk drive. The Mobile 700 can also be equipped with a CD-ROM drive. Two PC card slots (formerly called PCMCIA) enable the Mobile 500 notebook to operate two type I/II PC cards or one type III PC card. The two PC card slots on the Mobile 700 notebook allow simultaneous operation of type I/II and type III PC cards.

For mouse control the notebook provides a touchpad. A double-touch directly on the touchpad is all that is needed, for example, to open an application

Connections for external devices such as external monitor, printer and mouse are located on the rear panel of the notebook. The parallel port (which supports ECP and EPP modes) is designed to accommodate bi-directional data transfer.

The notebook disposes of a infrared interface for wireless data transfer.

In addition, the notebook has a connection port for a MobiDock or a QuickPort/QuickPort Plus.

An audio controller, two loudspeakers, a microphone and an audio input and output provide your notebook with an audio capability. You can thus incorporate voice, noise effects and music into your PC environment. You can also connect an external microphone and an external loudspeaker.

The system settings of the notebook can be configured via the user-friendly *BIOS Setup* program. Certain system settings (e.g. screen display, power-management functions) can be modified via various key combinations while you are using the notebook.

Your notebook has a number of security features to ensure that no unauthorized persons can access your data. For example, you can activate a screen saver with password protection. The security functions in the *BIOS Setup* also allow you to protect your data by means of passwords.

This Operating Manual tells you how to put your notebook into operation and how to operate it in daily use.

Notational conventions

The meanings of the symbols and fonts used in this manual are as follows:

Pay particular attention to texts marked with this symbol. Failure to observe this warning endangers your life, destroys the system, or may lead to loss of data.

This symbol is followed by supplementary information, remarks and tips.

- ► Texts which follow this symbol describe activities that must be performed in the order shown.
- ␣ This symbol means that you must enter a blank space at this point.
- ↵ This symbol means that you must press the Enter key.

`Texts in this typeface` are screen outputs from the server.

`Texts in this bold typeface` are the entries you make via the keyboard.

Texts in italics indicate commands or menu items.

"Quotation marks" indicate names of chapters and terms that are being emphasized.

Important notes

In this chapter you will find information regarding safety which it is essential to take note of when working with your notebook. The manufacturer's notes contain helpful information on your notebook. This chapter also contains information on the licenses like CE certificate and RFI suppression of the notebook.

Safety

This device complies with the relevant safety regulations for data processing equipment, including electronic office machines for use in an office environment. If you have any questions, contact your sales office or our customer service.

- Always use the bag supplied when transporting the notebook.
  If it needs to be shipped, use the original packaging or other suitable packaging to protect it from damage through mishandling.
- If the device is brought into the installation site from a cold environment, condensation can form. Before operating the device, wait until it is absolutely dry and has reached approximately the same temperature as the installation site.
- Ensure that the local line voltage remains within the range of 100 V to 240 V. Check the rated voltage set for the device.
- During installation and before operating the device, observe the instructions on environmental conditions in the chapter "Preparation for use and operation" as well as the instructions in the chapter "Technical data".
- Only run the notebook off the battery or power adapter included, or off authorized accessories (car adapter, MobiDock or QuickPort/QuickPort Plus).
- The power adapter has a specially approved power cable and must only be connected to a grounded power outlet.
  If the power adapter is connected to the grounded power outlet, it must be free-standing. The power adapter may not be covered while it is in operation. Do not stand the power adapter on heat-sensitive material.
- Ensure that the power socket on the power adapter or the grounded power outlet is freely accessible.
- The ON/OFF switch does not disconnect the device from the line voltage. To disconnect the line voltage completely, remove the power plug from the grounded power outlet.

- Lay the cables so that they are out of harm's way (danger of tripping) and cannot be damaged. When connecting and disconnecting cables, observe the relevant notes in the chapter "System expansions".
- No data transmission cable should be connected or disconnected during a thunderstorm.
- Please ensure that no objects (e.g., necklaces, paperclips etc.) or liquids can get into the interior of the device (electrical shock, short circuit).
- In emergencies (e.g. damaged casing, elements or cables, penetration of liquids or foreign matter), switch off the notebook immediately, remove the power connector, remove the battery, and contact your sales office or customer service.
- Only qualified technicians may repair the device. Unauthorized opening or incorrect repair may greatly endanger the user (electric shock, fire risk).
- When cleaning the device, observe the relevant notes in the paragraph "Cleaning the notebook".
- Install only system expansions that satisfy the requirements and rules governing safety and electromagnetic compatibility and relating to telecommunications terminal equipment. If you install other expansions, you may damage the system or violate the safety regulations and regulations governing RFI suppression. Information on which system expansions are suitable can be obtained from the customer service or your sales office.
- Data cables to peripheral devices must be adequately shielded.
- Only use batteries designed for the this notebook.
  Take care not to drop the battery or otherwise damage its housing (risk of fire).
  If the battery fails, do not use it in the notebook.
  Do not touch the contacts of the battery.
  Never interconnect the positive and negative terminals of the battery.
  Used batteries must be disposed of in accordance with local regulations (special refuse).
- If the LCD display is damaged (e.g. glass broken), do not allow any escaping liquid to come into contact with skin, mucous membranes (eyes, mouth). Do not inhale vapors.
  Clean parts of the body and clothing that have already come into contact with such liquids with plenty of water and soap.
- The warranty expires if the notebook is damaged during the installation or replacement of system expansions.

- You may set only those resolutions and refresh rates specified in the chapter "Technical data" or in the operating manual of the monitor. Otherwise you may damage your monitor. If you are in any doubt, contact your sales office or customer service.
- Keep this Operating Manual together with the device. If you pass on the device to a third party, please also pass on the manual.

Note on the laser

If your device is equipped with a CD-ROM drive, the following condition applies: The CD-ROM drive contains a light-emitting diode (LED), classified according to IEC 825-1:1993:LASER CLASS 1; it must not be opened.

Laserhänvisning

Om din apparat är utrustad med en CD-ROM-enhet gäller följande:
CD-ROM-enheten innhåller en ljusemitterande diod (LED), klassificerad enligt IEC 825-1:1993: KLASS 1 LASER APPARAT, och får därför inte öppnas.

Laserinformation

Skal enheden forsynes med et CD-ROM drev gælder følgende:
CD-ROM drevet indeholder en lysdiode (LED), klassificering iflg. IEC 825-1:1993:LASER KLASSE 1 og må derfor ikke åbnes.

Laserinformation

Følgende gjelder hvis maskinen er utstyrt med en CD-ROM stasjon:
CD-ROM stasjonen inneholder en lysutviklende diode (LED), som er klassifisert etter IEC 825-1:1993:LASER KLASSE 1, og skal derfor ikke åpnes.

Laser-ohje

Jos laitteeseen on kytketty CD-ROM-asema:
CD-ROM-asema sisältää valoa säteilevän diodin (LED), joka on luokiteltu määräyksen IEC 825-1:1993:LASER LUOKKA 1 mukaisesti. Tämän vuoksi asemaa ei saa avata.

- The lithium battery must be disposed of in accordance with local regulations concerning special waste.

Warning

The lithium battery of the device may only be replaced by one that is identical or by a type recommended by the vendor. If the lithium battery is not replaced in the proper manner, there is a danger of explosion (see the Operating Manual for your device).

VARNING

Explosionsfara vid felaktigt batteribyte. Använd samma batterityp eller en ekvivalent typ som rekommenderas av apparattillverkarenfabrikanten. Kassera använt batteri enligt fabrikantens instruktion.

ADVARSEL

Lithiumbatteri - Eksplosionsfare ved fejlagtig håndtering. Udskiftning må kun ske med batteri af samme fabrikat og type. Lever det brugte batteri tilbage til leverandøren.

ADVARSEL

Eksplosjonsfare ved feilaktig skifte av batteri. Benytt samme batteritype eller en tilsvarende type anbefalt av apparatfabrikanten. Brukte batterier kasseres i henhold til fabrikantens instruksjoner.

VAROITUS

Paristo voi räjähtää, jos se on virheellisesti asennettu. Vaihda paristo ainoastaan laitevalmistajan suosittelemaan tyyppiin. Hävitä käytetty paristo valmistajan ohjeiden mukaisesti.

Notes on installing and removing boards

Boards with ESDs (electrostatic sensitive devices) may be identified by the following label:

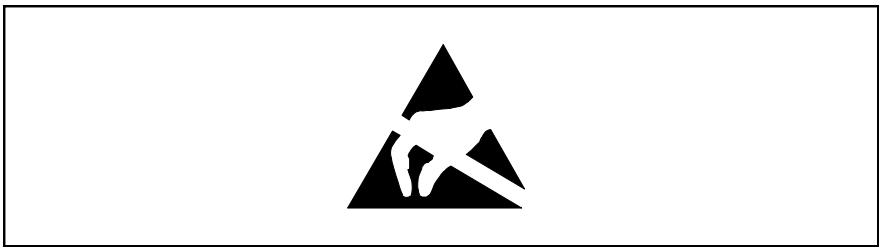

When you handle boards fitted with ESDs, you must observe the following points under all circumstances:

- You must always discharge yourself (e.g. by touching a grounded object) before working with boards containing ESDs.
- The equipment and tools you use must be free of static charges.
- Pull out the power plug before inserting or pulling out boards containing ESDs.
- Always hold boards with ESDs by their edges.
- Never touch pins or conductors on boards fitted with ESDs.

Manufacturer's notes

Energy saving

Make use of the notebook's power management features (see "Preparation for use and operation").

- If you do not use the notebook, switch it of.
- The notebook uses less power when the power management features are enabled. You will then be able to work for longer before having to recharge the battery.

Energy saving under Windows 95

If a monitor with energy saving features is connected to your notebook, you can use the *Screen Saver* tab to set the energy saving features of the monitor. Select the following item in the start menu: *Settings* - *Control Panel* - *Display* - *Display Properties* - *Screen Saver* - *Energy saving features of monitor*. You can set further energy saving functions using *Start* - *Settings* - *Control Panel* - *Energy* - *Advanced*.

Disposal and recycling

This device has been manufactured to the greatest possible degree from materials which can be recycled or disposed of in a manner that is not environmentally damaging. The device is taken back after use, so that it or its materials can be recycled, provided that it is returned in a condition which is the result of normal use. Any components not recuperated will be disposed of in an environmentally acceptable manner.

Do not throw lithium batteries or accumulators into the trashcan. They must be disposed of in accordance with local regulations concerning special waste.

If you have any questions on disposal, please contact your local office, our service department, or, directly:

Siemens Nixdorf Informationssysteme AG
Recycling Center
D-33094 Paderborn

Tel.: ..49 5251 720 810/Fax: ..49 5251 720 815

CE certificate

CE This device complies with the requirements of the EEC directive 89/336/EEC "Electromagnetic compatibility" and 73/23/EEC "Low voltage directive" with amending directive 93/68/EEC.

RFI suppression

All other devices connected to this product must have RFI suppression in accordance with EC directive 89/336/EEC. Products meeting these requirements are accompanied by a certificate issued by the manufacturer and carry the CE symbol.

FCC Class B Compliance Statement

If there is an FCC identifier on the device, then:
The following statement applies to the products covered in this manual, unless otherwise specified herein. The statement for other products will appear in the accompanying documentation.

NOTE:

This equipment has been tested and found to comply with the limits for a "Class B" digital device, pursuant to Part 15 of the FCC rules. These limits are designed to provide reasonable protection against harmful interference in a residential installation. This equipment generates, uses and can radiate radio frequency energy and, if not installed and used in strict accordance with the instructions, may cause harmful interference to radio communications. However, there is no guarantee that interference will not occur in a particular installation. If this equipment does cause harmful interference to radio or television reception, which can be determined by turning the equipment off and on, the user is encouraged to try to correct the interference by one or more of the following measures:

- Reorient or relocate the receiving antenna.
- Increase the separation between equipment and the receiver.
- Connect the equipment into an outlet on a circuit different from that to which the receiver is connected.
- Consult the dealer or an experienced radio/TV technician for help.

Siemens Nixdorf Informationssysteme AG is not responsible for any radio or television interference caused by unauthorized modifications of this equipment or the substitution or attachment of connecting cables and equipment other than those specified by Siemens Nixdorf Informationssysteme AG. The correction of interferences caused by such unauthorized modification, substitution or attachment will be the responsibility of the user.

The use of shielded I/O cables is required when connecting this equipment to any and all optional peripheral or host devices. Failure to do so may violate FCC rules.

This Class B digital apparatus meets all requirements of the Canadian Interference-Causing Equipment Regulations.

Important notice concerning power cord selection

The power cord for this unit has been packed separately and has been selected according to the country of destination. It must be used to prevent electric shock. Use the following guidelines if it is necessary to replace the original cord set.

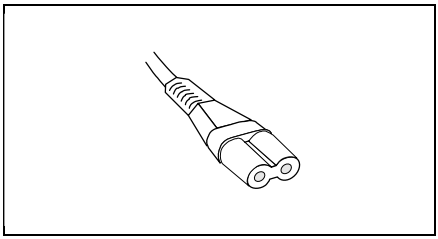

The female receptacle of the cord set must meet IEC 320 requirements (see Figure 1).

For the United States and Canada

Use a UL listed and CSA labeled cord set consisting of a two conductor cord with a maximum length of 15 feet.

For units which stand on a desk or table, type SVT or SJT cord sets shall be used.

For units which stand on floor, only SJT type cord sets shall be used.

The cord set must be selected according to the current rating for your unit. Please consult Table A for the selection criteria for power cords used in the United States and Canada.

Table A:

Cord Type	Size of Conductors in Cord	Maximum Current Rating of Unit
SJT	18 AWG 16 AWG 14 AWG	10 Amps 12 Amps 12 Amps
SVT	18 AWG 17 AWG	10 Amps 12 Amps

For units set at 115 V:

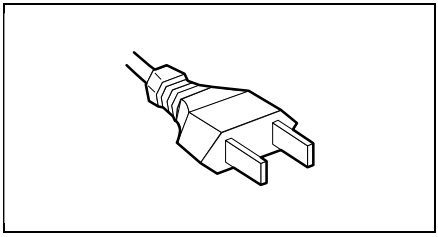

use a parallel blade attachment plug rated 15 A, 125 V.

For units set at 230 V (outside of the United States and Canada):

use a cord set consisting of a minimum AWG according to Table A and an attachment plug rated 15 A, 250 V. The cord set should have the appropriate safety approvals for the country in which the equipment will be installed and should be marked HAR.

Optimum battery capacity

Before a battery is used for the first time, the battery learning cycle should be performed (see also the section "Learning cycle for batteries under Windows 95"). To utilize the optimum charging capacity of the nickel-metal hydride battery, you should regularly perform the battery learning cycle for this battery.

If a lithium ion battery is to be stored over a long period of time, it should always be stored in a discharged state to prevent loss of capacity through self-discharge. To discharge the battery, leave your notebook switched on until the battery is completely empty.

On the move with the notebook

Please observe the points listed below when transporting your notebook.

Transporting the notebook

- Do not carry the notebook by its open screen or by its battery compartment if the battery is removed.
- Switch the notebook off and close the LCD display and the covers for the ports and the PC cards (PCMCIA cards).
- Always use the bag supplied when transporting the notebook.
  If it needs to be shipped, use the original packaging or other suitable packaging to protect it from damage through mishandling.
- Protect the notebook from severe shocks and extreme temperatures (e.g., direct sunlight in a car).

Before starting the journey

- Copy important data from the hard disk to a floppy disk.
- If you wish to use your notebook during a flight, check first with the flight attendants if it is permissible to do so.
- If you are travelling abroad, ensure that the power adapter can be operated on the local line voltage. If this is not the case, obtain the appropriate power adapter for your notebook.
  Do not use any other voltage transformers!

Cleaning the notebook

Switch the notebook off and pull the power plug of the power adapter out of the grounded-contact power socket.

Do not clean any interior parts yourself, leave this job to a service technician.

Do not use any cleaning agents that contain abrasives or may corrode plastic.
Ensure that no liquid enters the Notebook.

Wipe the housing with a dry cloth, or if particularly dirty, use a cloth which has been moistened in mild domestic detergent and then carefully wrung out.
To clean the keyboard and the touchpad, you can use disinfectant wipes.
Wipe the monitor housing with a soft, moistened cloth.

Preparation for use and operation

Pay attention to the relevant safety notes provided in chapter "Important notes".

You must charge the battery and install the operating system, application programs and drivers before you can work with the notebook.

When used away from a wall power outlet, the notebook runs on its built-in battery. You can increase battery life by enabling its power management features.

If you use the notebook in a normal office situation, you run it off the mains with the aid of the power adapter, or in a MobiDock or QuickPort/QuickPort Plus.

Refer to the chapter on "System expansions" for instructions on how to connect external devices (e.g. mouse, printer) to the notebook.

Unpacking and checking the delivery

- Unpack all the individual parts.
- Check the delivery for damage incurred during transport.
- Check whether the delivery agrees with the details in the delivery note.
- Check whether all necessary details have been entered on the first page of the guarantee coupon booklet.

Should you discover that the delivery does not correspond to the delivery note, notify your local sales office immediately.

We recommend that you keep the original packaging in case you need to ship the equipment again.

Choosing where to set up your notebook

Select a suitable location for the notebook before setting it up. Bear the following points in mind when looking for a location.

- We recommend that you place your notebook on a surface with good anti-slip qualities. In view of the multitude of different finishes and varnishes used on furniture, it is possible that the rubber feet of the devices will mark the surface they stand on.
- Do not expose the notebook to extreme environmental conditions. Protect it from dust, humidity and heat.
- Keep other objects 100 mm clear of the notebook and its power adapter to ensure adequate ventilation. The space between the notebook's feet must be clear.. Do not place it on a soft surface (e.g., a carpet or soft furnishings). Do not cover the ventilation slots in the notebook and the power adapter.
- The power adapter must be at least 200 mm away from the notebook. It must be free-standing and may not be covered. Do not stand the power adapter on heat-sensitive material.
- For wireless data transfer you must align the notebook's infrared interface with that of the partner device (e.g. PC). The devices must not be more than one meter apart.

Preparing the notebook for use

The supplied power cord conforms to the requirements of the country in which you purchased your notebook. Make sure that the power cable is approved for use in the country in which you intend to use it.
The notebook and the power adapter should be at least 200 mm apart. Keep other objects 100 mm clear of the notebook and its power adapter. Do not cover the ventilation slots in the notebook and the power adapter.

► Place the notebook on a level, stable surface.

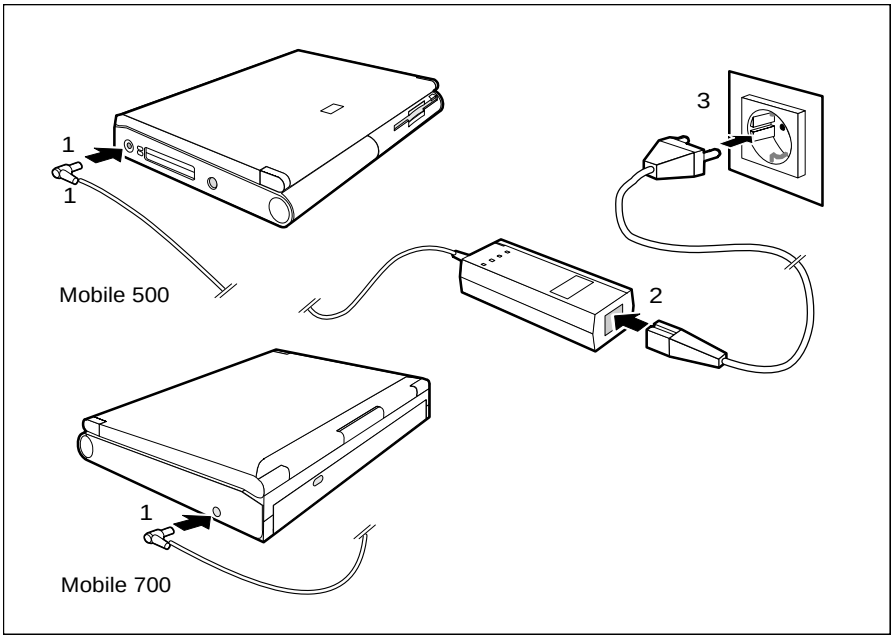

► Plug the DC output connector on the power adapter into the DC input connector (DC IN) on the notebook (1).

► Connect the AC power cable to the power adapter (2).

► Plug the power cable into the grounded power outlet (3).

In this state, a built-in battery is charged. When the notebook is switched off, the Nickel-metal hydride battery will charge in roughly two hours and the Lithium Ion battery in roughly four hours. If the notebook is switched on, it will charge in roughly five hours.

Switching on the notebook

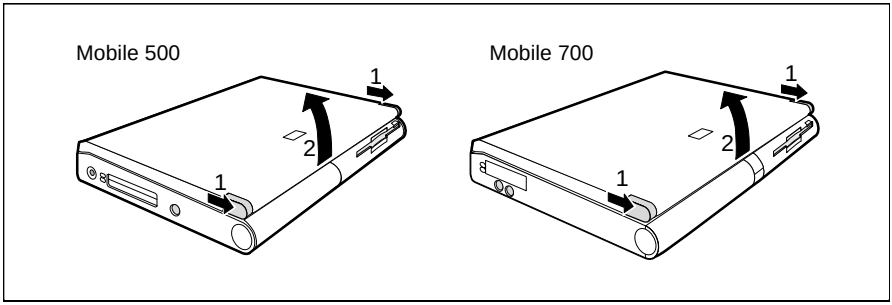

► Slide forward the release tabs (1) and swing open the screen (2).

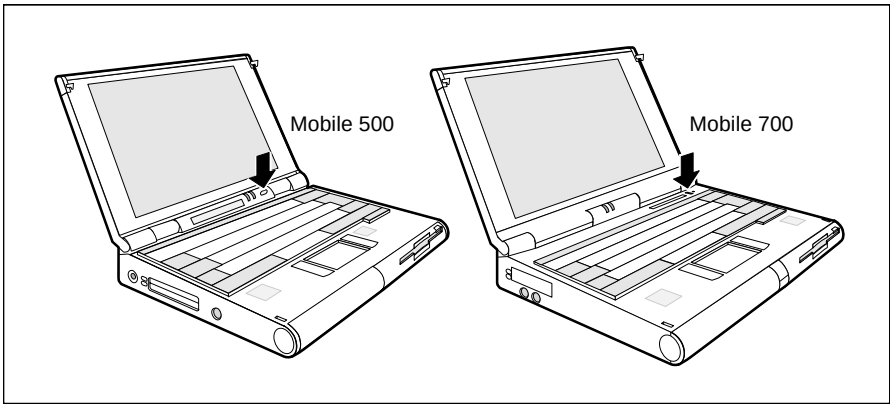

► Press the ON/OFF switch (3) for roughly one second.

i

When you switch on your Notebook for the first time the supplied software is set up and configured. Please follow the instructions on the screen.
If you want to partition your hard disk, please refer to chapter "Troubleshooting and tips" - "Restoring the hard disk contents under Windows 95".
If you have assigned the user password, you must enter this when requested to do so, in order to start the operating system.

Once you have installed the operating system and have generally familiarized yourself with the notebook, you should perform the battery learning cycle (see "Learning cycle for batteries under Windows 95").

You must not switch off or warm-boot your notebook during first-time installation .

Notes on Windows 95 and Windows NT

The license number for Windows 95 or Windows NT is printed on the front cover of the Windows 95/ Windows NT manual supplied.

If you do not have a Windows 95 OEM CD (that is if your system is not equipped with a CD-ROM drive), you should create a backup copy after installing Windows 95 so that you can restore the hard disk contents in an emergency. You need about 40 diskettes for this.

- Generate the system and driver diskettes using the *Create Driver Disks* icon.

Switching off the notebook

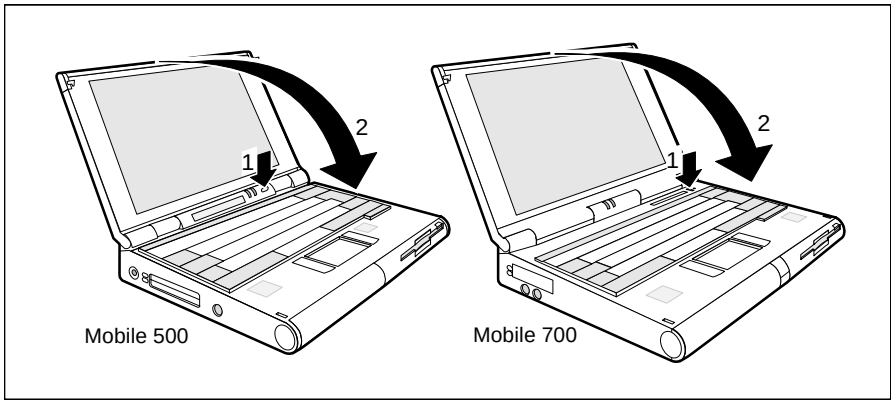

- Shut down the operating system properly. If Windows 95 is installed, the system is shut down and the notebook is switched off. If the notebook is not switched off automatically, press the ON/OFF switch (1) for approx. one second.
- Close the display of the notebook (2) so that it locks into place on the left and right.

Displays and input devices

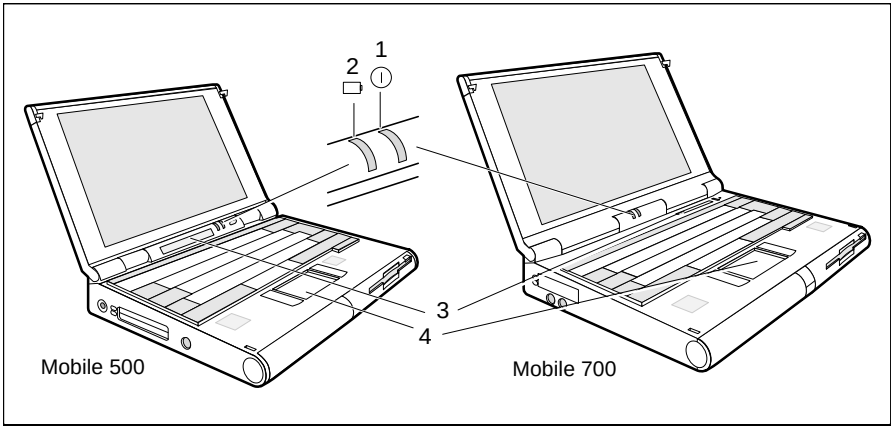

1 = POWER LED
2 = BATTERY LED
3 = Display field
4 = Touchpad with touchpad buttons

Displays

The notebook has two LEDs and an LCD-type display field.

POWER LED

The POWER LED is on when the notebook is switched on.
The LED flashes when the notebook is switched to standby mode.

BATTERY LED

The BATTERY LED is on when the battery is charging.
The BATTERY LED flashes when battery power has dropped to below 20%.
The frequency with which it flashes increases before the notebook shuts itself down.

Display field

Symbols and texts in the display field indicate the operating state of the notebook. The meaning of the symbols and texts are as follows:

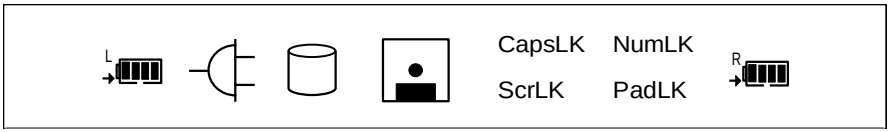

indicates the status of the battery.
L indicates that the information applies to the battery in the left compartment.
R indicates that the information applies to the battery in the right compartment.

The arrow indicates that the battery is charging.

indicates that the battery is 80%-100% charged.

indicates that the battery is 60%-80% charged.

indicates that the battery is 40%-60% charged.

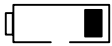

indicates that the battery is 20%-40% charged.

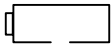

indicates that the battery is less than 20% charged..

indicates that the notebook is connected to an external power source (e.g. via the power adapter).

indicates that the internal hard disk or a drive in the left compartment (CD-ROM, MOD) of the notebook is being accessed.
You must not remove the CD-ROM or the MOD when this symbol is visible.

indicates that the floppy disk in the floppy disk drive is being accessed.
You must not remove the floppy disk when this symbol is visible.

`CapsLK` indicates that all the characters you type will appear as uppercase. In the case of overlay keys, the character on the upper left on the keycap appears when that key is pressed. The CapsLock indicator appears when you press the ⇩ key.

`ScrLK` The NumLock indicator appears when you press the **Scroll Lock** key. The effect this key has varies from program to program.

`NumLK` The NumLock indicator appears when you press the **Pad Num** key. If `PadLK` is also visible in the function display, the blue numbers on the lower right on keys in the integrated numeric keypad are enabled.

`PadLK` The PadLock indicator appears when you press the **Fn** + **Pad Num**. key. This enables the blue editing functions on the upper right on keys in the integrated numeric keypad.

Touchpad and touchpad buttons

Make sure that the touchpad does not come into contact with dirt, liquids or grease.

Do not touch the touchpad if your fingers are dirty.

Do not rest heavy objects (e.g., books) on the touchpad or the touchpad buttons.

The touchpad enables you to move the mouse pointer on the screen. If, for example, you move one finger to the left over the touchpad, the mouse pointer also moves to the left.
A brief tap with the finger on the touchpad has the same effect as clicking with the left mouse button. A brief "double-tap" with the finger on the touchpad has the same effect as double-clicking with the left mouse button.

The left and right touchpad buttons have the same functions as the left and right mouse buttons.

If you attach and install an external mouse, the touchpad and its buttons are disabled. If you attach an external serial mouse, you must select the *Disabled* option for the *Internal Mouse* field in the *Main Setup*. This also releases interrupt 12, so that you can use it for other applications.

Keyboard

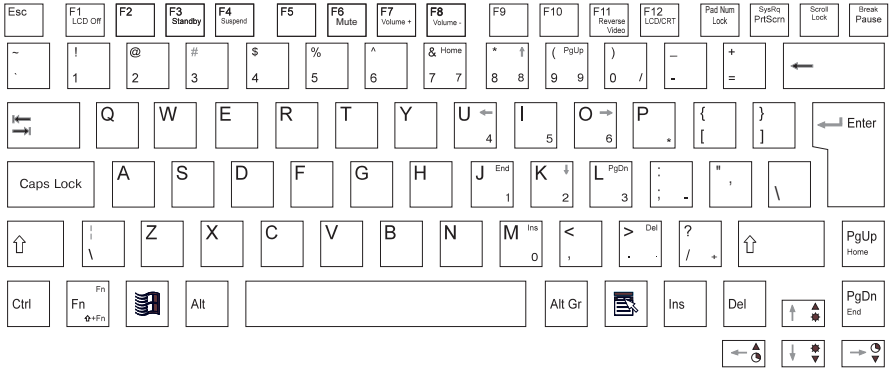

The following description of keys and key combinations refers to Windows 95.

Additional functions supported by the keys are described in the relevant manuals supplied with your application programs.

The figure below shows how to access the different characters and editing functions on keys with overlaid functions.
The keystrokes shown in the example only work if `CapsLK`, `NumLK`, and `PadLK` have not been enabled (i.e., they are not visible in the display field).

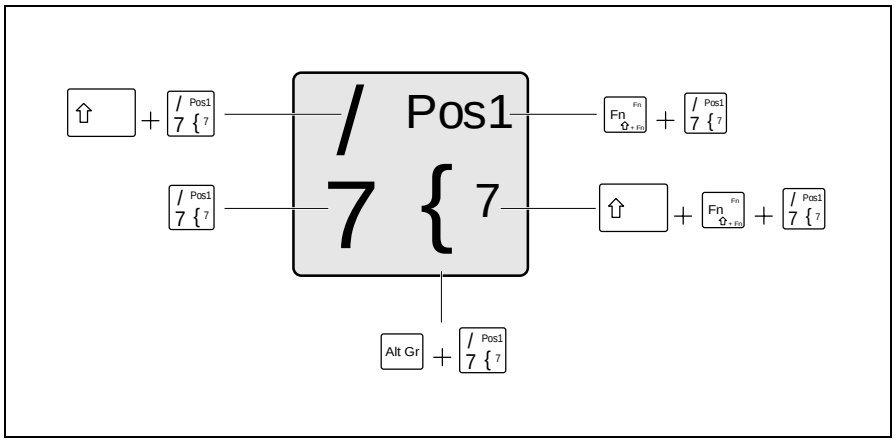

Example: German keyboard

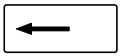

Backspace
The Backspace key deletes the character to the left of the cursor.

Tab key
The Tab key moves the cursor to the next tab stop.

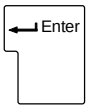

Enter key (also, Return or Carriage Return)
The Enter key tells the computer that the command line entered is complete. The command you have entered is executed when you press Enter.

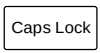

Caps Lock
The Caps Lock key shifts the alphabetic characters on the keyboard to uppercase. (When it is enabled, the `CapsLK` symbol appears in the display field.) In the case of overlay keys, the character on the upper left on the keycap appears when that key is pressed.
To cancel the Caps Lock function, simply press the Caps Lock key again.

Shift
The Shift key causes uppercase characters to appear. In the case of overlay keys, the character on the upper left on the keycap appears when that key is pressed.

Alt Gr
The **Alt Gr** key causes the characters in the lower middle of the keycap to appear (e.g., / in the case of the **0**) key.

Fn
The **Fn** key enables the special functions indicated in blue on overlay keys (see "Key combinations").
If the external keyboard does not feature a **Fn** key, you can simultaneously press the **Ctrl** + **Alt Gr** keys instead.

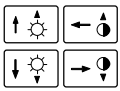

Cursor keys
The cursor keys move the cursor in the direction of the arrow, i.e., up, down, left, or right.

Pad Num
When the numeric keypad is enabled (PadLK is visible in the display field), the **Pad Num** key causes this set of keys to produce numbers (NumLK appears in the display field). Pressing them produces the blue characters shown on the bottom right on the keycaps.

Pause
The **Pause** key temporarily suspends display output. Output will resume when you press any other key.

Start key
invokes the *START* menu of Windows 95.

Menu key
invokes the menu for the marked object.

Numeric keypad

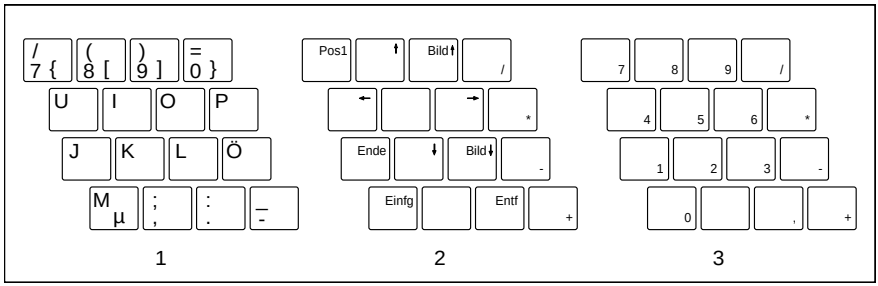

Example: German keyboard

1 = Characters enabled when neither NumLK, nor PadLK are visible in the display field.
2 = Editing functions enabled when PadLK is visible in the display field.
3 = Characters enabled when NumLK and PadLK are visible in the display field.

The key combination **Fn** + **Pad Num** enables and disables the integrated numeric keypad. If the numeric keypad is enabled PadLK is visible in the display field. This enables the blue editing functions on the upper right on keys in the integrated numeric keypad.

If PadLK is visible in the display field, pressing the **Pad Num** key enables and disables the numeric functions of the keys in the integrated numeric keypad. If the numeric functions of the keys are enabled NumLK is visible in the display field. Pressing them produces the blue characters shown on the bottom right on the keycaps.

If PadLK and/or NumLK are visible in the display field, the keys in the integrated numeric keypad will also produce the standard characters shown on the keys.
If you press and hold the Fn key, the keys will produce lowercase letters and numbers.
If you press and hold the key combination Fn + Shift, the keys will produce uppercase letters and the characters indicated on the upper left of the keycaps.

Key combination

The following description of keys and key combinations refers to Windows 95

Some of the following key combinations may not function in other operating systems and with some device drivers.
Other key combinations are described in the relevant manuals supplied with your application programs.

You enter key combinations as follows:

- Press and hold the first key in the combination.
- While keeping the first key pressed, press the other key or keys in the combination.

If the external keyboard does not feature a Fn key, you can simultaneously press the Ctrl + Alt Gr keys instead.

Start the BIOS Setup
If the message Press F2 for Setup appears when you start your notebook, you can run the *BIOS Setup* by pressing the key combination indicated.

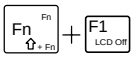

Switch the display on/off
This key combination switches your notebook's display on and off. Doing so does not affect any running programs.

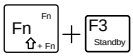

Enable Standby mode
This key combination enables Standby mode. `Standby` appears in the display field.
You can cancel Standby mode by pressing any key.

Enable Suspend mode
This key combination enables Suspend mode.
When you switch the notebook on again, it returns to the same place you were in the program that was running when you switched to Suspend mode.

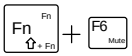

Switch the loudspeaker on/off
This key combination switches your notebook's integrated loudspeaker on and off.

Loudspeaker louder
This key combination raises the volume of the integrated loudspeaker.

Loudspeaker quieter
This key combination decreases the volume of the integrated loudspeaker.

Switch between normal and reverse video
If your notebook has a monochrome or DSTN color display, this key combination switches it between normal and reverse video.

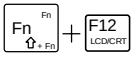

Select internal/external display
If an external display is connected to your notebook, you can switch to it with this key combination. You can opt to use:

- just the notebook's internal display
- just the external display
- both the internal and the external display.

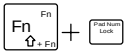

Enable/disable the integrated numeric keypad
This key combination enables and disables the integrated numeric keypad. If the numeric keypad is enabled `PadLK` is visible in the display field. This enables the blue editing functions in the integrated numeric keypad.

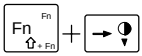

Reduce the display contrast
If your notebook has a DSTN color display, this key combination reduces its contrast.

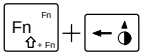

Increase the display contrast
If your notebook has a DSTN color display, this key combination increases its contrast.

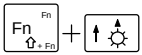

Increase the display brightness
This key combination increases the brightness of the display.

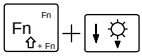

Reduce the display brightness
This key combination reduces the brightness of the display.

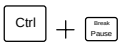

Halt the current operation
This key combination can be used to halt an operation instantly (its effect depends on the program that is running).

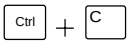

Halt the current operation
This key combination can be used to halt an operation instantly without clearing the keyboard buffer.

Warm boot
This key combination triggers a reset and warm-boots the notebook.

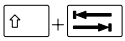

Backtab (Shift+Tab)
This key combination moves the cursor back to the previous tabular stop.

Floppy disk drive

Use only the floppy disk drive designed for this notebook.
Do not use force when installing or removing the floppy disk drive.
Make sure that no foreign objects enter the slots.

The disk drive can also be removed or installed while in operation (but not when the disk drive is being accessed).

Removing the floppy disk drive

- Swing open the display.
- Place the notebook on a level, stable surface.

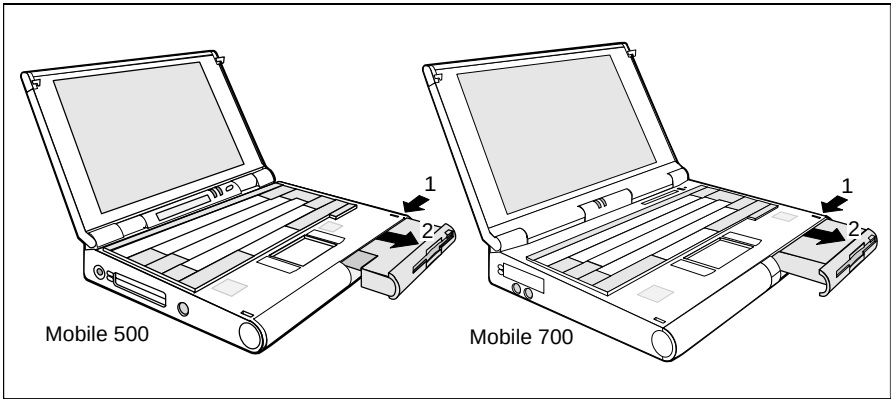

- Press the disk drive's unlock button (1).
- Pull the disk drive out of the slot (2).

Installing the floppy disk drive

- ► Swing open the display.
- ► Place the notebook on a level, stable surface.

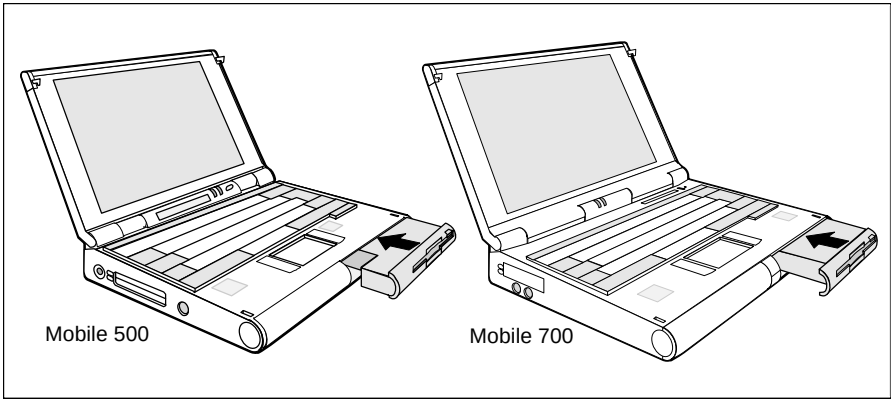

- ► Place the floppy disk drive in the right-hand slot so that the contacts enter first. The floppy disk drive's eject button must point outwards to the right.
- ► Push the floppy disk drive into the slot until you feel it locking into place.

Working with floppy disks

Follow the instructions supplied by the vendor of the floppy disks.

Never clean the floppy disk drive with cleaning disks. Even just one attempt would destroy the read/write head in the disk drive within 20 seconds.

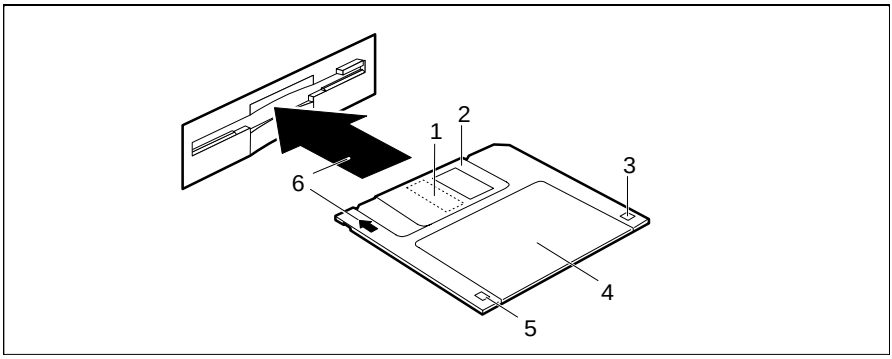

1 = Slot for read/write head
2 = Sliding metal cover
3 = Hole for recognition of HD (High Density) disks
4 = Label area
5 = Write protection area
6 = Insertion direction

Preventing write operations to floppy disk

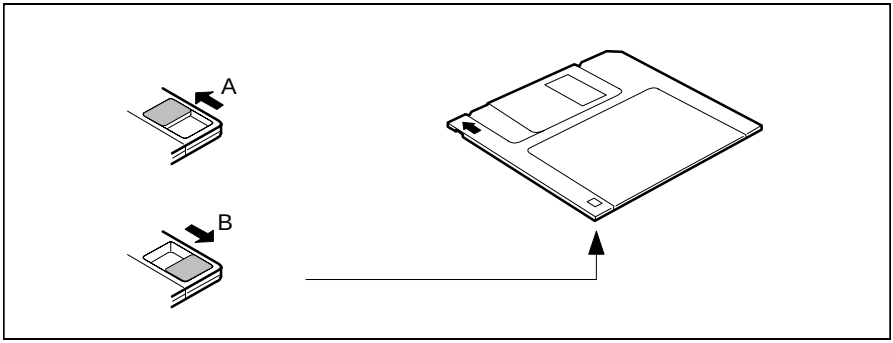

A = floppy disk is not write protected
B = floppy disk is write protected

Drives in the left slot

In the Mobile 700 notebook you can install an additional drive in the left slot. This additional drive can be:

- a CD-ROM drive
- a MOD drive
- a second hard disk drive

Only use drives designed for the this notebook.
Do not use force when installing or removing the disk drive.
Make sure that no foreign objects enter the slots.

Installing a drive

► Switch off the notebook.

► Swing open the display.

► Place the notebook on a level, stable surface.

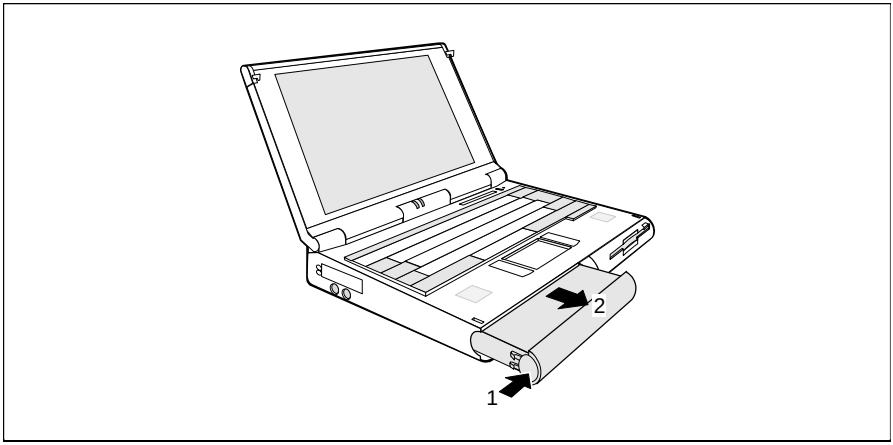

► Press the unlock button on the left module (e. g. the battery) (1).

► Pull the module out of the left slot (2).

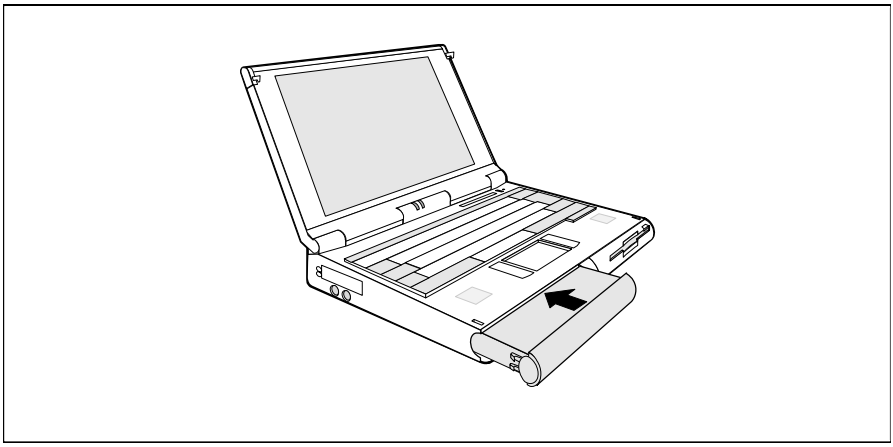

- ► Place the drive in the lefthand slot so that the contacts enter first. The disk drive's eject button must point outwards to the left.
- ► Push the disk drive into the slot until you feel it locking into place.

Removing a drive

- ► Switch off the notebook.
- ► Swing open the display.
- ► Place the notebook on a level, stable surface.

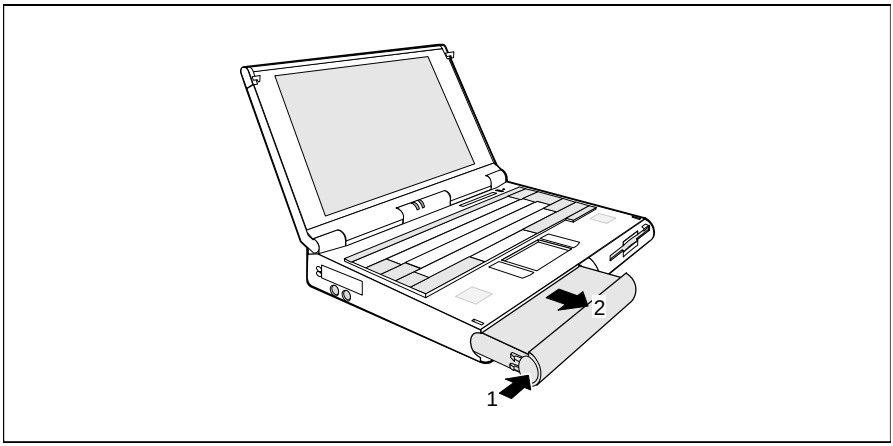

- ► Press the disk drive's unlock button (1).
- ► Pull the disk drive out of the slot (2).

Operating the CD-ROM drive

Avoid touching the surface of a CD. Handle CDs only by their edges!

Always store CDs in their cases. You avoid dust contamination, scratches, bending or other damage.
Protect your CDs from dust, mechanical vibration and direct sunlight!

Avoid storing a CD in areas subject to high temperatures or humidity.

You may use both 8-cm and 12-cm CDs.
When using CDs of minor quality vibrations and reading errors may occur.

The following CD formats are supported by the CD-ROM drive:

- CD-Digital Audi
- CD-ROM (Mode 1 and Mode 2
- CD-ROM XA
  (Mode 2, Form 1 and Form 2
- CD-I (Mode 2, Form 1 and Form 2)
- CD-I Ready
- CD-Bridge
- Photo-CD (Single- and Multisession)
- Video-CD

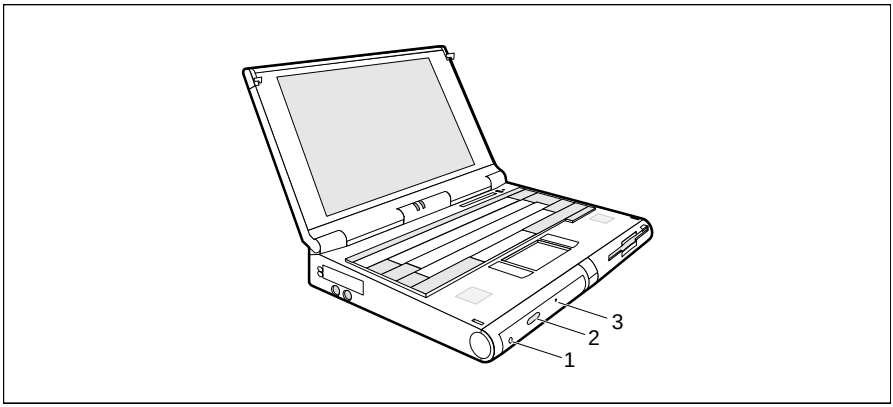

1 = Power On display
2 = Insert/eject button
3 = Button for opening by hand

Power On display

The Power On display (1) flashes when a CD is inserted. It goes out when the drive is ready for reading.

i If the display does not go out after the CD is inserted, and continues to flash, the CD is probably damaged or dirty.

The Power On display remains lit while the CD-ROM drive is being accessed.

Inserting or removing a CD

The notebook must be switched on.

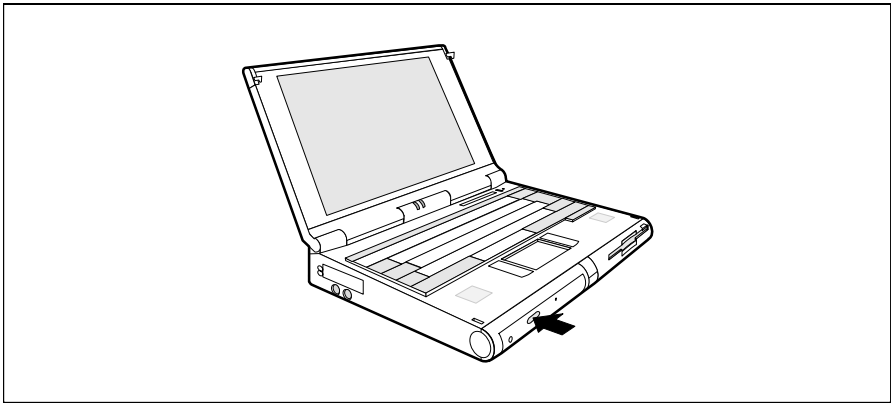

► Push the insert/eject button.

The CD tray opens.

► Pull the CD tray completely out.

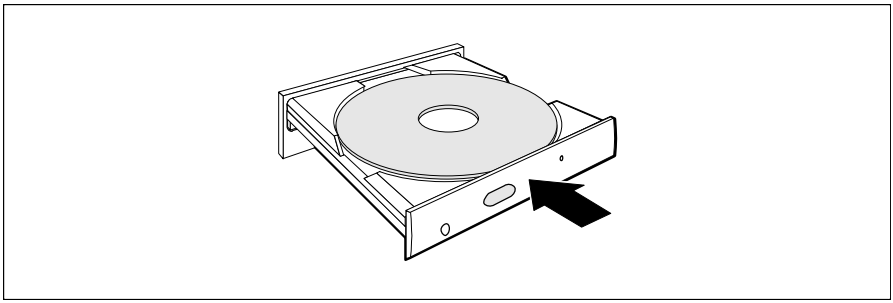

► Place the CD in the CD tray with the labeled side facing upwards, and carefully push the CD into the mount or remove an inserted CD.

► Push the CD tray in until you feel it locking into place.

Opening the CD tray by hand

In the event of a power failure or damage to the drive it may be necessary to manually remove the CD.

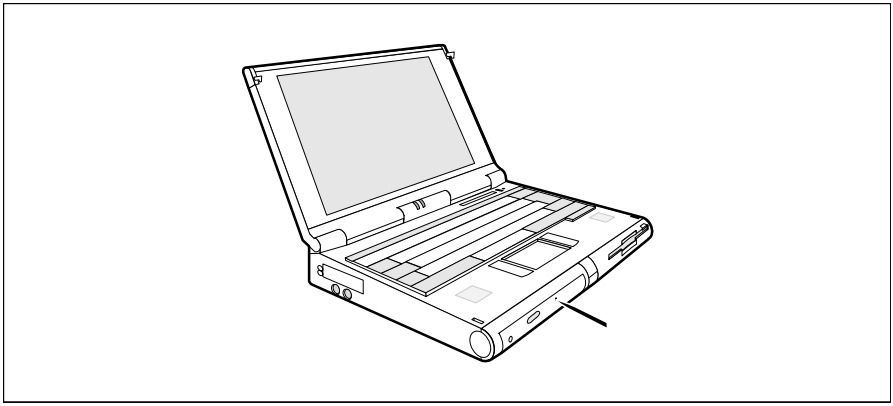

- Switch off the notebook.
- Press a piece of wire (e. g. a paper clip) firmly into the opening.

The CD tray is unlocked. You can pull the CD tray out of the drive.

Operating the MOD drive

Follow the instructions supplied by the vendor of the MO disks and the following notes:

Do not move the protection against accidental contact on the MO disk.

Protect your MO disk from dust, mechanical vibration, heat, direct sunlight and strong magnetic fields!

Do not use the MO disk during large fluctuations in temperature or humidity.

Do not drop the MO disk.

Always transport the MO disk in its protective cover.

Never clean the MOD drive with cleaning disks. Even just one attempt would destroy the read/write head in the disk drive within 20 seconds.

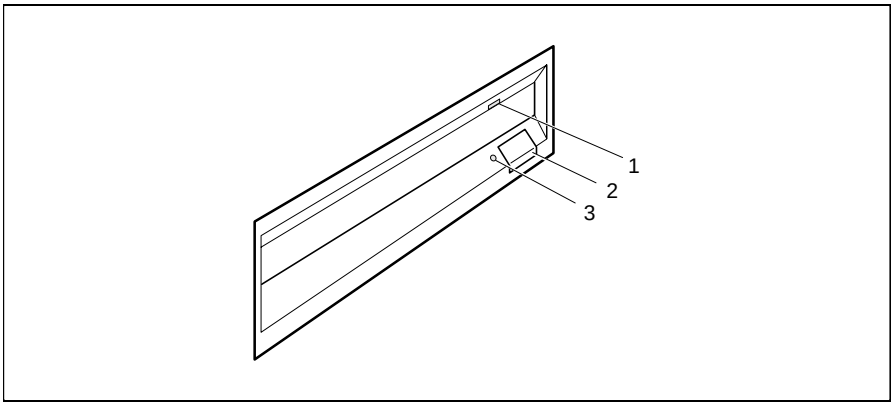

1 = Power On display
2 = Insert/eject button
3 = Button for opening by hand

Preventing write operations to MO disks

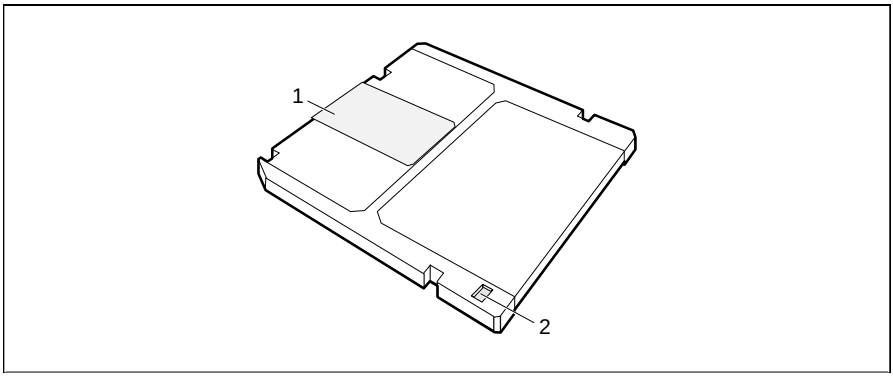

1 = Sliding metal cover
2 = Write-protection

Removing the MO disk by hand

In the event of a power failure or damage to the drive it may be necessary to manually remove the MO disk.

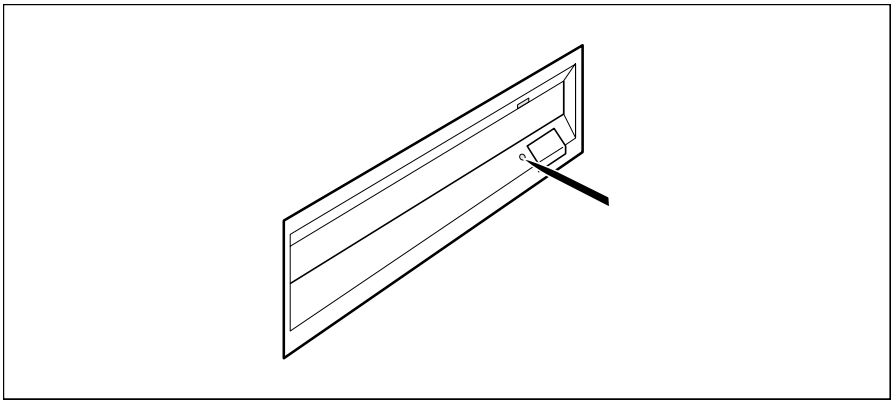

- ► Switch off the notebook.
- ► Push a piece of wire (such as a paper clip) into the emergency removal opening.
- ► Remove the MO disk from the MOD drive.

PC cards (PCMCIA cards)

In the notebook Mobile 500, you can install either two 3.3 mm (type I) or 5.5 mm (type II) PC cards (former name: PCMCIA cards), or one 10.5 mm (type III) PC card.
In the notebook Mobile 700, you can install either one 3.3 mm (type I) or 5.5 mm (type II) PC card (former name: PCMCIA cards), and one 10.5 mm (type III) PC card.

The PC card must not consume more than 600mA (at +5V) or 60mA (at +12V).
Consult the documentation supplied by the card's manufacturer and follow the instructions provided.
Never use force when inserting or removing a PC card.
Make sure that no foreign objects fall into the PC card slot.

Zoomed video port

Your Mobile 700 Notebook is equipped with a Zoomed Video Port (ZV port). You can install an MPEG decoder card or a TV card or a videograbber card in the lower PC card slot. Please contact one of our IT Service Shops or your local sales partner or office for advice on selecting a suitable ZV port card.

Installing a PC card

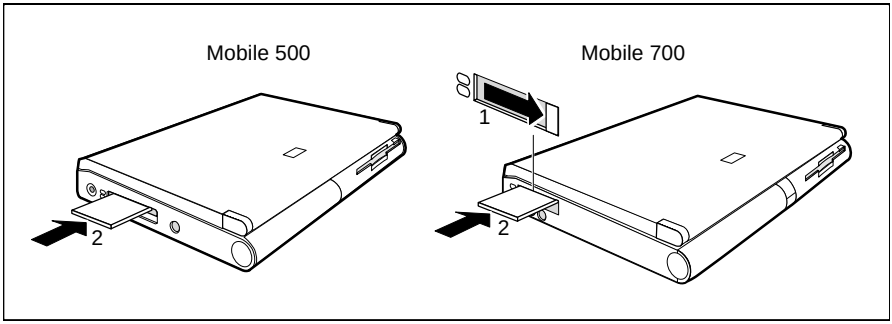

- Only at notebook Mobile 700:
  Slide the cover in the direction of the arrow as far as it will go (1).
- Insert the PC card, contacts first, into the slot guides (2). The labeled side of the PC card must be facing upwards.
- Gently push the PC card into the slot until you feel it click into place.

i

Consult the documentation supplied with the PC card for information on how to install the necessary device drivers.
For further information refer to the information files (**.txt*, **.doc*, **.wri*) provided with the PC card driver diskette or in the Windows 95 manual.
Only at notebook Mobile 700:
If you are using PC cards that do not connect to external devices, close the PC card slot cover.

Removing a PC card

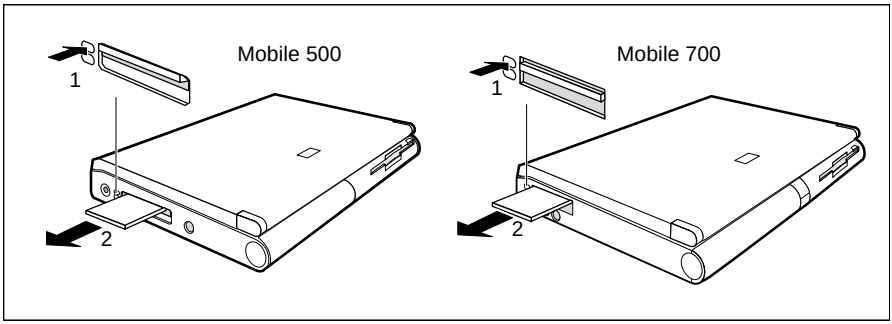

- Only at notebook Mobile 700:
  Open the PC card slot cover.
- Press the eject button (1). It will project further out of the notebook's case.
- Slide the PC card out of the notebook (2).

Microphone and loudspeaker

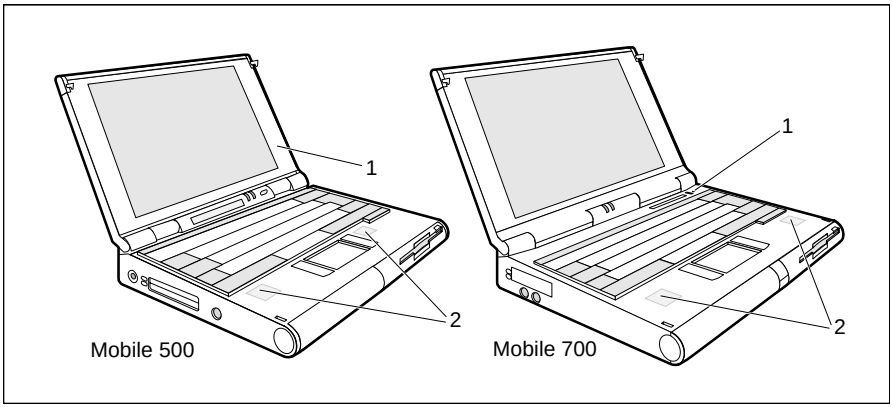

1 = built-in microphone 2 = built-in loudspeaker

Your notebook contains a built-in microphone (1) and a loudspeaker (2).

If you attach an external microphone, the built-in microphone is disabled. If you attach an external loudspeaker, the built-in loudspeaker is disabled.

Using power-management features

The notebook uses less power when the power management features are enabled. You will then be able to work for longer before having to recharge the battery.

If you will not be using your notebook for a longer period, switch it off.
Reducing the brightness level of the display helps to reduce the amount of power consumed by the notebook.

If you enable one of the power-management options in the *Power* menu of the *BIOS Setup*, that option will still be enabled the next time you switch on your notebook.

Long Life mode

Long Life mode uses all the available power-management features. The notebook uses little power and operates slightly slower than usual.

Enabling Long Life mode

- In the *Power Setup* menu set the *APM* field to *Enabled* and the *Power Savings* field to *Maximum Battery Life.*
- In the *Power Setup* menu set the *PM Control* field to *Always Enable* or to *Battery Powered Only.*

Disabling Long Life mode

- In the *Power Setup* menu set the *PM Control* field to *Disabled.*

Doze mode

In Doze mode the notebook reduces its processor speed if it is inactive for a longer period. The processor speed is increased as soon as the system is used again.

Doze mode is not available if the notebook is attached to a MobiDock.

Enabling Doze mode

- In the *Power Setup* menu set the *Power Savings* field to *Customize* and the *Hardware Dozemode* field to *Enable.*

or

- In the *Power Setup* menu set the *Power Savings* field to *Maximum Battery Life.*

Standby mode

In Standby mode the notebook's system clock is suspended and its display and hard disk motor are shut down.

Enabling Standby mode

- Press the key combination Fn + F3.

Disabling Standby mode

- Press any key to continue.

Automatic activation

If the notebook is running and is not used for a predefined period of time, it switches into Standby mode. Any input causes the notebook to come out of Standby mode.

- In the *Power Setup* menu set the *Power Savings* field to *Customize* and set the time which has to elapse before the notebook switches to Standby mode in the *Standby Timeout* field.

or

- In the *Power Setup* menu set the *Power Savings* field to *Maximum Performance* or *Maximum Battery Life.*

Suspend mode

In suspend mode, all current data (active programs, files) is saved to the hard disk or buffered in the memory, and the notebook is switched off.

Suspend to Disk

The active data can only be saved if sufficient space is available on the hard disk (at least the main memory size + 2 Mbytes). If you are running the operating system OS/2 or Windows NT, you have to set up an additional FAT partition on the hard disk as drive C: (see the manuals supplied with the operating system in question).

Suspend to DRAM

The current data is buffered in the memory (DRAM). The data is stored for as long as the notebook is supplied with energy. If the battery is full, the data is stored for a matter of days. Without a battery and without a power supply the data is stored for only around 5 minutes.

Enabling Suspend mode

If your notebook is in Suspend mode:

- do not connect any external peripheral devices
- do not disconnect any external peripheral devices
- do not attempt to switch it on if the built-in battery is empty
- do not change or remove the floppy disk, if inserted
- do not add or remove RAM
- do not add or remove any PC cards

▶ Press the key combination **Fn** + **F4**.

Disabling Suspend mode

▶ Switch on the notebook.
The notebook reverts to the status it had prior to switching into Suspend mode.

Automatic activation

If the notebook is running and is not used for a predefined period of time, it switches into Suspend mode.

- In the *Power Setup* menu set the *Power Savings* field to *Customize* and set the time which has to elapse before the notebook switches to Standby mode in the *Suspend Timeout* field.
- Set the *Suspend Mode* field to *Save to Disk* or *Save to DRAM.*

or

- In the *Power Setup* menu set the *Power Savings* field to *Maximum Performance* or *Maximum Battery Life.*
- Set the *Suspend Mode* field to *Save to Disk* or *Save to DRAM.*

Display

Switching off the display does not affect running programs.

Switching on the display

- Press the key combination Fn + F1.

Switching off the display

- Press the key combination Fn + F1.

Automatic powerdown

You set this function in the *BIOS Setup.*
If the notebook receives no input for a predefined period of time, the display switches off automatically. It switches on again automatically as soon as the notebook receives input.

- In the *Power Setup* menu set the *Power Savings* field to *Customize* and set the time which has to elapse before the display switches off in the *Video Timeout* field.

or

- In the *Power Setup* menu set the *Power Savings* field to *Maximum Performance* or *Maximum Battery Life.*

Hard disk's power-management feature

If the hard disk is not accessed for a predefined period of time, its motor switches off automatically. It switches on again automatically the next time the hard disk is accessed.

Enabling the hard disk's power-management feature

- In the *Power Setup* menu set the *Power Savings* field to *Customize* and set the time which has to elapse before the motor of the hard disk switches off in the *Hard Disk Timeout* field.

or

- In the *Power Setup* menu set the *Power Savings* field to *Maximum Performance* or *Maximum Battery Life*.

Loudspeaker

Disabling the loudspeaker

- Press the key combination Fn + F6.

Enabling the loudspeaker

- Press the key combination Fn + F6.

Disabling the loudspeaker in BIOS Setup

- In the *Advanced Setup Integrated Peripherals* menu set the *On Board Audio* field to *Disabled*.

Volume adjustment

Increasing the volume

▶ Press the key combination Fn + F7.

Reducing the volume

▶ Press the key combination Fn + F8.

You can also adjust the volume of the loudspeaker in the audio program (e.g. mixer) or in the application program using the audio functions.

Changing display settings

You configure the basic display settings with *Main Setup* in the *BIOS Setup* (see the section "Settings in BIOS Setup").

You can change the settings using key combinations.

Switching between normal and reverse video

If your notebook has a DSTN color display, you can switch between normal and reverse video. You can select a normal display (dark characters on a light background) or a reverse display (light characters on a dark background).

▶ Press the key combination Fn + F11.

Switching between internal and external display

If an external monitor is connected to your notebook, you can switch between different display options. You can opt to use:

- just the notebook's internal display
- just the external display
- both the internal and the external display.

The setting you select with *Display Device Selection* in *Main Setup* is always active when you switch on your notebook.

- Press the key combination Fn + F12 until you find the display option you require.

Setting the display contrast

If your notebook has a DSTN color display, you can set the display contrast.

Increasing the display contrast

- Press the key combination Fn + ← until you find the right display contrast.

Reducing the display contrast

- Press the key combination Fn + → until you find the right display contrast.

Setting the display brightness

If your notebook has a DSTN color display, ,you can adjust the brightness. Reducing the brightness level of the display helps to reduce the amount of power consumed by the notebook.

Increasing the brightness

- Press the key combination Fn + ↑ until you find the right brightness level.

Reducing the brightness

- Press the key combination Fn + ↓ until you find the right brightness level.

The battery

The notebook is fitted with a battery (Lithium Ion battery or Nickel-metal hydride battery) that provides it with power during mobile use. You can increase battery life by enabling its power management features.

In addition to the standard battery, you can also use a second battery. To do so, you must change the built-in floppy disk drive against the additional battery. By using both batteries, you can double the notebook's mobile operation time.

The battery charge is indicated by the BATTERY LED and the battery symbol in the display field (see the section "Displays") When you switch on the notebook, it takes a few seconds before the battery status is displayed.

The battery will last for roughly 500 charge/discharge cycles.

To utilize the optimum charging capacity of the battery, you should regularly perform the battery learning cycle (see "Learning cycle for batteries under Windows 95").

Charging, caring for and maintaining the battery

The battery can only be charged when the ambient temperatures is between 5°C and 40°C.

The battery charge is indicated by the BATTERY LED and the battery symbol in the display field.

When the notebook is switched off, the Nickel-metal hydride battery will charge in roughly two hours and the Lithium Ion battery in roughly four hours. If the notebook is switched on, it will charge in roughly five hours. If the notebook is fitted with two batteries, charging will take twice as long. The batteries are charged successively. The battery which was connected first is charged first.

You can charge the battery by:

- connecting the notebook to the power adapter
- connecting the notebook to the car adapter
- connecting the notebook to the MobiDock
- connecting the notebook to the QuickPort/QuickPort Plus

Before a battery is used for the first time, the battery learning cycle should be performed (see also the section "Learning cycle for batteries under Windows 95"). To utilize the optimum charging capacity of the nickel-metal hydride battery, you should regularly perform the battery learning cycle for this battery.

Lithium Ion battery (Li-Ion)

You should continue working in battery mode until an audible warning indicates that charging is necessary. Then you can charge the battery.

If a lithium ion battery is to be stored over a long period of time, it should always be stored in a discharged state to prevent loss of capacity through self-discharge.

Nickel-metal hydride battery (NiMH)

You should always deep discharge the Nickel-metal hydride battery once a month. In addition you should deep discharge the battery:

- after charging the battery for the first time (e.g., when you use the notebook for the first time)
- if you have not used the notebook for a lengthy period (approx. one week)
- if the battery's service life becomes shorter
- if the battery gets hot while charging
- the charge segments in the battery symbol start to flash

Connecting the power adapter

The supplied power cord conforms to the requirements of the country in which you purchased your notebook. Make sure that the power cable is approved for use in the country in which you intend to use it.
The notebook and the power adapter should be at least 200 mm apart.
Keep other objects 100 mm clear of the notebook and its power adapter.
Do not cover the ventilation slots in the notebook and the power adapter.
Do not stand the power adapter on heat-sensitive material.
The power adapter's AC cord may only be connected to a power outlet if the notebook is connected to the power adapter.

► Switch off the notebook.

► Place the notebook on a level, stable surface.

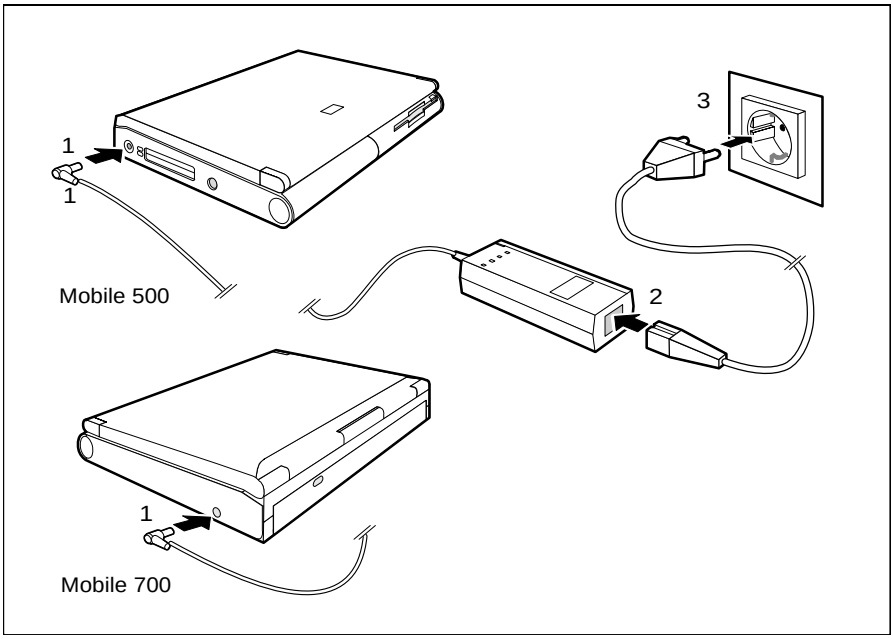

- ► Plug the DC output connector on the power adapter into the DC input connector (DC IN) on the notebook (1).
- ► Connect the AC power cable to the power adapter (2).
- ► Plug the power cable into the power outlet (3).
  The power adapter display lights up. After a few seconds the notebook's BATTERY LED (a) lights up. The battery charges.

Connecting the car adapter

You can use the car adapter to charge your notebook's battery if the car has a 12V electrical system.

- ► Switch off the notebook.
- ► Place the notebook on a level, stable surface.

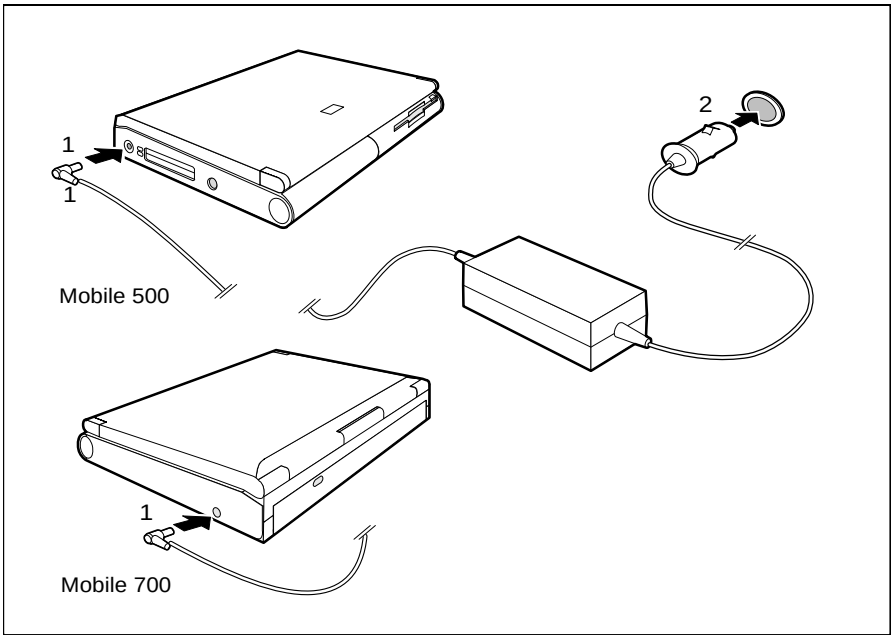

- ► Plug the DC output connector on the car adapter into the DC input connector (DC IN) on the notebook (1).
- ► Start the car's engine.

You should only use the car adapter while the car's engine is running. You must not start the car's engine while the car adapter is connected to the car's electrical system.

Do not stand the car adapter on heat-sensitive material. When in operation, the car adapter must be free-standing and may not be covered.

Keep other objects 100 mm clear of the notebook. Do not cover the ventilation slots in the notebook.

- ► Plug the car adapter's input connector into the car's cigarette lighter (2). After a few seconds the notebook's BATTERY LED (a) lights up. The battery charges.

Learning cycle for batteries under Windows 95

To utilize the maximum capacity of the battery, you must perform a "learning cycle", in other words the battery "learns" what its maximum capacity is.

During the learning cycle the battery is first fully charged, then completely discharged, and then recharged again.

To perform the battery learning cycle:

- ► Install the battery in your notebook.
- ► Connect the power adapter to your notebook.
- ► Switch the notebook on.
- ► Press the **F8** key while *Starting Windows 95* is displayed on the screen.

The Windows 95 Start menu is then displayed.

- ► Select *Safe mode command prompt only*.
- ► Insert the "Battery Tools" diskette in the drive.
- ► Start the *a:\alerneng.exe* program.

The battery learning cycle takes between four and seven hours. When the message *Main Battery succeeded* or *Aux Battery succeeded* appears on the screen the battery has a charging capacity of 5 - 10%.

- ► After this message has been displayed abort the program using the **Ctrl** + **C** keys.
- ► Switch your notebook off.

The battery will now be fully charged.

Inserting and removing batteries

Only use batteries designed for the this notebook.

Never use force when inserting or removing a battery.

Make sure no foreign objects fall into the battery compartment.

Removing the battery from the left compartment

- ► Switch off the notebook. You can leave the notebook on provided the battery in the left slot is not the notebook's only power source.
- ► Swing open the display.
- ► Place the notebook on a level, stable surface.

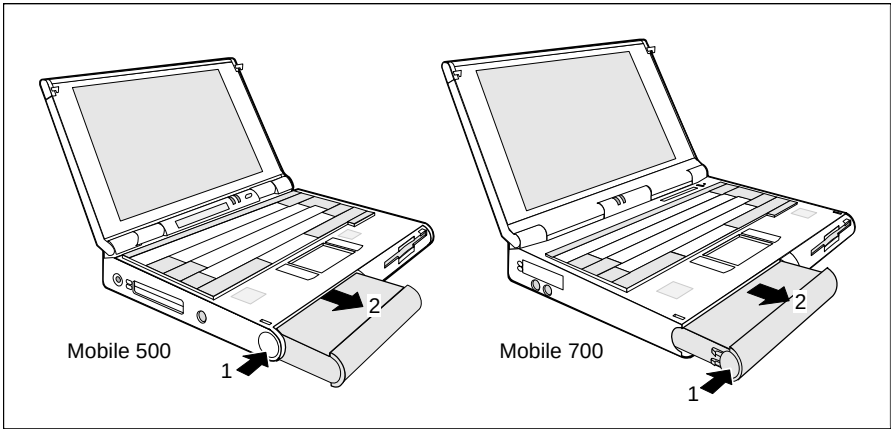

- ► Press the left battery's unlock button (1).
- ► Pull the battery out of the left slot (2).

Inserting the battery in the left compartment

- ► Swing open the display.
- ► Place the notebook on a level, stable surface.

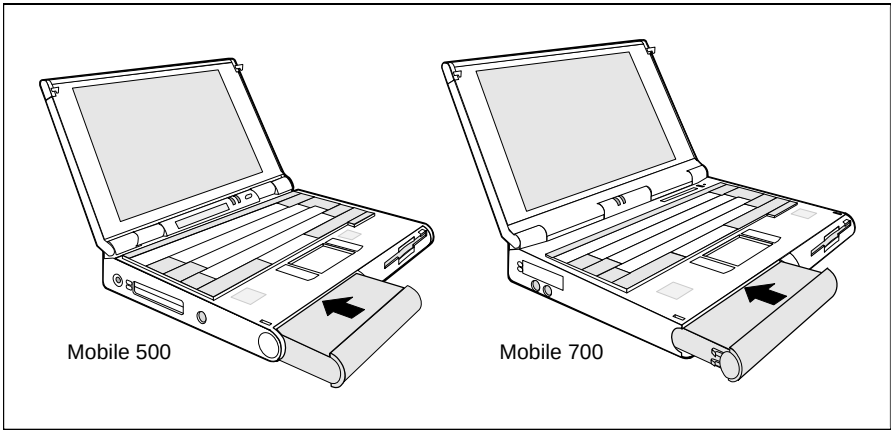

- ► Place the battery in the lefthand slot so that the contacts enter first. The top and bottom of the battery are marked with an arrow. Place the battery in the lefthand slot in such a way that the arrow on the top of the battery points inwards.
- ► Push the battery into the slot until you feel it locking into place.

Inserting the battery in the right-hand compartment

- ► Swing open the display.
- ► Place the notebook on a level, stable surface.

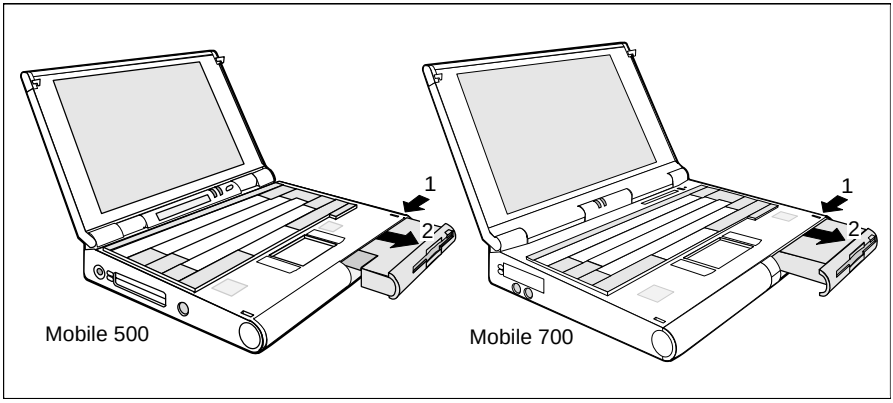

- ► Press the disk drive's unlock button in the right-hand slot (1).
- ► Pull the disk drive out of the slot (2).

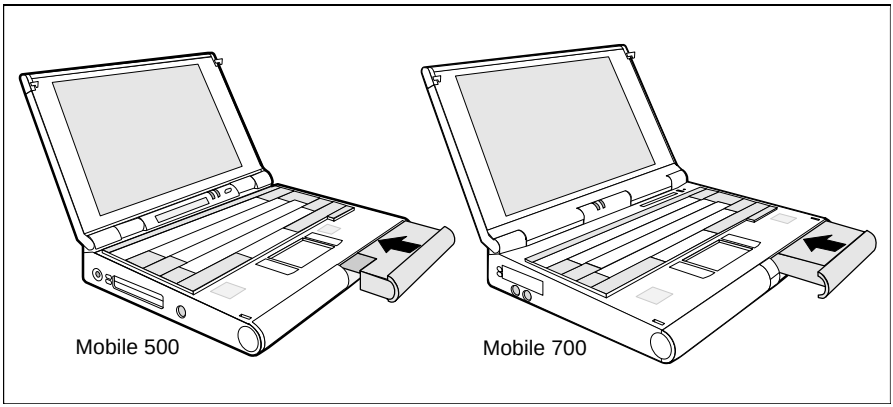

- ► Place the battery in the right-hand slot so that the contacts enter first. The top and bottom of the battery are marked with an arrow. Place the battery in the right-hand slot in such a way that the arrow on the top of the battery points inwards.
- ► Push the battery into the slot until you feel it locking into place.

Removing the battery from the right-hand compartment

- ► Switch off the notebook. You can leave the notebook on provided the battery in the right-hand slot is not the notebook's only power source.
- ► Swing open the display.
- ► Place the notebook on a level, stable surface.

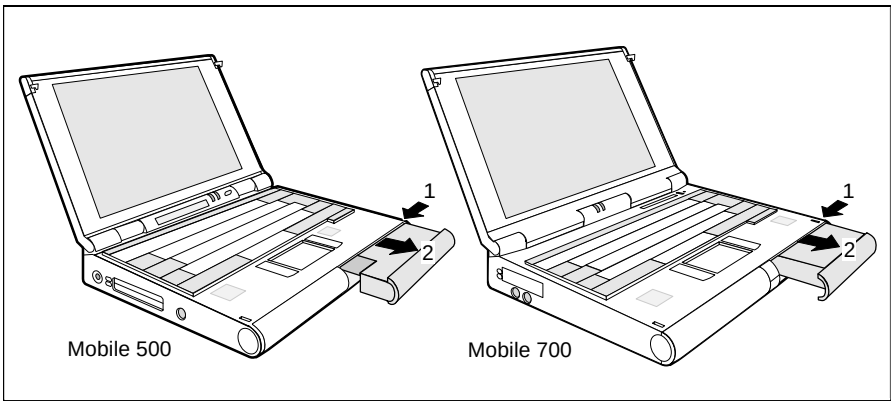

- ► Press the right-hand battery's unlock button (1).
- ► Pull the supplementary battery out of the right-hand slot (2).

Settings in BIOS Setup

In *BIOS Setup* you can set the system functions and the hardware configuration of the notebook.

When it is supplied, the notebook is set to factory default settings. You can alter these settings in the various menus of the *BIOS Setup*. Any changes you make take effect as soon as you save and quit the *BIOS Setup*.

The *BIOS Setup* program contains the following menus:

- *Main Setup*: for system settings as time, date, ports and pointing device
- *Advanced Setup:* for setting up the advanced features
- *Security Setup*: for setting up the security features
- *Power Setup*: for setting up the power-management features
- *Docking Setup* for configuring the MobiDock (this option is only available if the notebook is connected to a MobiDock).
- *Boot Setup:* for configuring the boot sequence
- *Exit:* for exiting BIOS Setup

Starting BIOS Setup

- ► Restart the notebook (switching on/off or warm boot).
- ► When the message `Press F2 for Setup` appears, press the key **F2**.

i

If a supervisor or user password has been defined:

- ► Enter the supervisor or user password and press the Enter key.
- ► If you have forgotten the user password contact your system administrator or contact our customer service. If you have forgotten the supervisor password contact our customer service.

If you have accessed the Setup using the user password, you cannot change the settings in the BIOS Setup menus "Advanced", "Security", "Docking" and "Boot".

The *Main* menu is displayed on the screen.

```
      Phoenix BIOS Setup Copyright 1985-95 Phoenix Technologies Ltd.
  Main    Advanced    Security    Power    Docking    Boot    Exit

  System Time:                  [07:42:19]          Item Specific Help
  System Date:                  [08/11/1995]        ──────────────────

  Diskette A:                   [1.44M, 3½"]

► IDE Adapter 0 Master (C: 810 MB)
► IDE Adapter 0 Slave  (CD-ROM)
  Display Device Selection:     [LCD & CRT]
  PS/2 Mouse:                   [Enabled]
  Video System:                 [EGA / VGA]
► Boot Options

  Video Display:                [EGA/VGA]

  System Memory:            640 KB
  Extended Memory:          15 MB

F1  Help   ↑↓  Select Item  Space  Change Values      F9 Setup Defaults
ESC Exit   ←→ Select Menu  Enter  Select ► Sub-Menu  F10 Previous Values
```

Example for *Main* menu

Operating BIOS Setup

- Use the cursor key ← or → to select the menu you wish to access to make changes.
- Press the Enter key. The menu is displayed on the screen.
- Use the cursor key ↑ or ↓ to select the field you wish to change.
- Press the space bar to change the entries.
  The fields *Supervisor Password*, *User Password* and *Docking Station Password* require that you enter normal text.
- Repeat the last two steps described for all the fields you wish to change.
- Make a note of the changes you have made (here in this manual, for example).
- Use the **F9** key to load the default values of the selected setup menu.
- With the **F10** key all the values of the menu you are currently in are restored.

Main menu - Making system settings

In the *Main* menu you can set up the following:

- time (in the field marked *Time*)
- date (in the field marked *Date*)
- hard disk settings (in the two fields marked *IDE Adapter)*
- display device (in the field marked *Display Device Selection)*
- pointing devices (in the field marked *Internal Mouse)*
- display settings (in the fields marked *Video System/Video Display*)
- System startup options (in the field marked *Boot Options*)

```
    Phoenix BIOS Setup Copyright 1985-95 Phoenix Technologies Ltd.
  Main    Advanced    Security    Power    Docking    Boot    Exit

  System Time:                  [07:42:19]        Item Specific Help
  System Date:                  [08/11/1995]      ──────────────────

  Diskette A:                   [1.44M, 3½"]

▶ IDE Adapter 0 Master (C: 810 MB)
▶ IDE Adapter 0 Slave  (CD-ROM)
  Display Device Selection:     [LCD & CRT]
  PS/2 Mouse:                   [Enabled]
  Video System:                 [EGA / VGA]
▶ Boot Options

  Video Display:                [EGA/VGA]

  System Memory:            640 KB
  Extended Memory:          7 MB

F1  Help  ↑↓  Select Item  Space  Change Values      F9 Setup Defaults
ESC Exit  ←→ Select Menu  Enter  Select ▶ Sub-Menu  F10 Previous Values
```

Example for *Main* menu

System Time/System Date

System Time indicate the time of the device. If you change the time setting, enter the time in the format *HH:MM:SS* (hours:minutes:seconds)

System Date indicate the date of the device. If you change the date setting, enter the date in the format *MM.DD.YYYY* (month/day/ year)

Diskette A: - Floppy disk drive

This field shows the type of the built-in floppy disk drive.

*360KB - 5 1/4“, 720KB - 3 1/2“, 1.2MB - 51/4“, **1.44MB - 3 1/2“**, 2.88MB - 3 1/2“*
The entry depends on the floppy disk drive installed.

Not Installed A floppy disk drive is not installed.

IDE Adapter 0 Master/IDE Adapter 0 Slave - hard disk drive

These two fields call the submenu to make corresponding settings of the IDE hard disk drives.

i You should change the default settings only if you are connecting an additional IDE drive (e.g. CD ROM drive)

The following description of the setting options for *IDE Adapter 0 Master* also applies to *IDE Adapter 0 Slave* , *IDE Adapter 1 Master* and *IDE Adapter 1 Slave*. The default settings depend on the installed drive.

```
    Phoenix BIOS Setup Copyright 1985-95 Phoenix Technologies Ltd.
Main

        IDE Adapter 0 Master (C: 814 MB)          Item Specific Help

  Autotype Fixed Disk:          [Press Enter]

  Type:                         [Auto]  814 Mb
  Cylinders:                      1579
  Heads:                            16
  Sectors/Track:                    63
  Write Precomp:                  None

  Multi-Sector Transfers:      16 Sectors
  LBA Mode Control:             Enabled
  32 Bit I/O:                  [Enabled]
  Transfer Mode:               Fast PIO 3

F1  Help   ↑↓  Select Item   Space  Change Values      F9 Setup Defaults
ESC Exit   ←→ Select Menu   Enter  Select ► Sub-Menu  F10 Previous Values
```

Example for the submenu *IDE Adapter 0 Master*

If you have installed a new unformatted IDE hard disk drive, you should mark the *Autotype Fixed Disk* field and press the Enter key. This has the effect of setting the optimum values for the IDE hard disk drive. You can change these values if you set the *Type* field to *User*.

If you install a formatted hard disk drive, the values are set automatically.

Type - Hard Disk Type

This field is used to specify the type of hard disk drive.

Auto	If the hard disk supports this mode, the setup menu reads the hard disk parameters from the disk itself. You do not need to select the parameters yourself.
User	You can enter the hard disk parameters yourself. If you have set the hard disk parameters with *Autotype Fixed Disk*, you can only reduce the values.
None	You cannot change the hard disk parameters (*Cylinders, Heads, Sector/Track* and *Write Precomp*). An IDE drive has not been installed.
CD	If, for example, a CD-ROM drive is inserted into the notebook or a CD-ROM drive is built into the MobiDock, this item enables you to boot the system from the CD-ROM drive.

Cylinders, Heads, Sectors/Track, Write Precomp - hard disk parameter

These hard disk parameters are set in accordance with the IDE hard disk drive. If you want to change the hard disk parameters manually, set the *Type* field to *User*.

Multi-Sector Transfers - Block Transfer

This field specifies the transfer mode for the IDE hard disk drive.

Disabled One block is transferred for each interrupt.

2 Sectors, *4 Sectors*, *6 Sectors*, *8 Sectors*, *16 Sectors*
The set number of blocks (sectors) is transferred for each interrupt. This enhances the performance.

LBA Translation - Addressing

This field enables and disables the LBA (Logical Block Addressing) mode. If a hard disk supports LBA mode, the LBA mode allows you to set up and use hard disks with a capacity of more than 528 Mbytes.

The default settings depend on the installed IDE hard disk drive. Change the default entries only if you are installing another hard disk drive.

You may only use IDE drives in the LBA mode selected when they were set up. In other words, if you set up a hard disk with LBA mode disabled, you may only operate the hard disk with LBA mode disabled.

Disabled The BIOS uses the hard disk parameters and supports a maximum capacity of 528 Mbytes.

Enabled If the hard disk supports LBA and it has a capacity of more than 528 Mbytes, the BIOS translates the hard disk parameters. This allows the disk's full capacity to be used.

32 Bit I/O - Access width for data transfer

This field specifies the width of data transmission between the processor and the IDE controller.

Enabled Data transfer is performed with 32-bit I/O commands. This enhances performance.

Disabled Data transfer is performed with 16-bit I/O commands.

Transfer Mode

This field specifies the transfer mode for the IDE hard disk drive.

Standard
0,8 Mbyte/s to 2 Mbyte/s

Fast PIO 1
2 Mbyte/s to 4 Mbyte/s

Fast PIO 2 4 Mbytes/s to 5 Mbytes/s

Fast PIO 3 5 Mbytes/s to 10 Mbytes/s

Fast PIO 4 10 Mbytes/s to 13,3 Mbytes/s

Display Device Selection

This field is used to specify the display device.

LCD&CRT The notebook's internal display and the external display are used.

CRT Just the external display is used.

LCD Just the external display is used.

If the notebook is connected to a MobiDock and an external display is connected to the MobiDock, the external display is used regardless of the setting in the BIOS setup (CRT only).

PS/2 Mouse

This field determines whether the PS/2 mouse or the touchpad is enabled on the notebook.

Enabled The internal touchpad and a PS/2 mouse are enabled.

Disabled The internal touchpad and the PS/2-Maus are disabled.
You must set *Disabled* if you want to use an external serial mouse.

External Only The PS/2 mouse is enabled. The internal touchpad is enabled.

Video System - External monitor type

This field is used to specify the connected external monitor type.

***EGA/VGA**, CGA 80x25, Monochrome*
Default entry: *EGA/VGA*

Boot Options - System startup options

This field calls the submenu to select the settings for the system startup of the device.

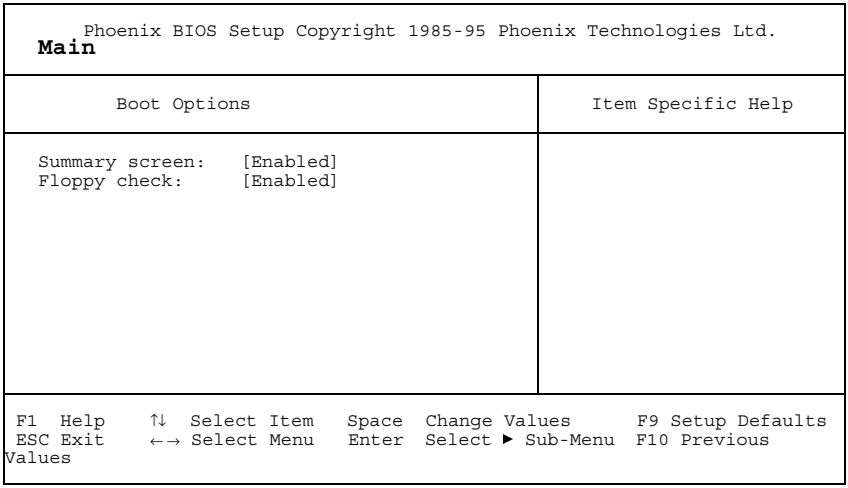

Example for the submenu *Boot Options*

Summary screen - Displaying the configuration at system startup

This field is used to specify whether the configuration is displayed at system startup.

Enabled The configuration is displayed when the device is switched on.

Disabled The configuration is not displayed when the device is switched on.

Floppy check - Checking the disk drive

This field can make the system startup faster.

Enabled The entire configuration is checked when the notebook is switched on.

Disabled The disk drive is not checked in the self-test when the notebook is switched on.

System Memory - Main memory

This field indicates the size of the available base memory below 1 Mbyte.

Extended Memory

This field indicates the size of the memory above 1 Mbyte.

Advanced menu - Making advanced system settings

Change the default settings only for special applications. Incorrect settings can cause malfunctions.

In the *Advanced* menu you can make the following settings:

- Ports and controllers (in the *Integrated Peripherals* submenu)
- PCI configuration (in the *PCI Devices* submenu)
- Second-level cache (in the *Memory Cache* submenu)
- Plug&Play functionality (in the *Plug and Play O/S* field)
- Configuration data (in the *Reset Configuration Data* field)
- Hard disk access (in the *Large Disk Access Mode* field)

```
       Phoenix BIOS Setup Copyright 1985-95 Phoenix Technologies Ltd.
Main    Advanced    Security    Power    Docking     Boot    Exit

                    Warning!                          Item Specific Help
  Setting items on this menu to incorrect
values
  may cause your system to malfunction.

 ► Integrated Peripherals
 ► PCI Devices
 ► Memory Cache

   Plug & Play O/S:              [Yes]
   Reset Configuration Data:     [No]

   Large Disk Access Mode:      [DOS]

 F1  Help    ↑↓  Select Item   Space  Change Values      F9 Setup Defaults
 ESC Exit    ←→  Select Menu   Enter  Select ► Sub-Menu  F10 Previous
Values
```

Example of the *Advanced* menu

Integrated Peripherals - Ports and controllers

This fied calls the submenu to make the settings for the ports and controllers.

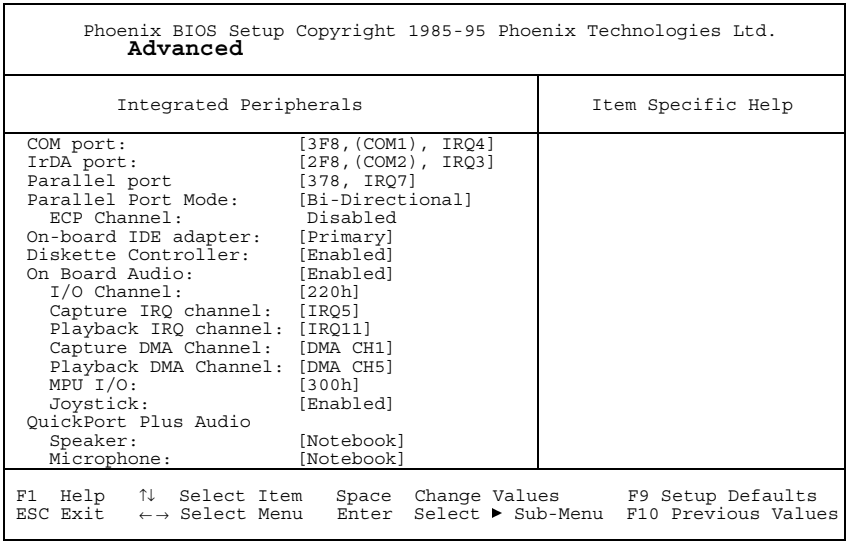

Example for the submenu *Integrated Peripherals*

COM port - Serial port

This field selects the address and the interrupt used to access the relevant serial interface.

3F8h (COM1) IRQ4, *2F8h (COM2) IRQ3*, *3E8h (COM3) IRQ4*, *2E8h (COM4) IRQ3*
The serial port is set to the shown address and interrupt.

Auto The serial port is automatically set to the next available combination (address, interrupt).

Disabled The serial interface is disabled.

IrDA port - infrared interface (- serial port)

This field defines which serial port is used as a infrared interface.

If you wish to use infrared data transfer, an infrared interface with the associated hardware must be incorporated in the device.

2F8h (COM2) IRQ3, *3F8h (COM1) IRQ4*, *3E8h (COM3) IRQ4*, *2E8h (COM4) IRQ3*
The infrared interface is set to the shown address and interrupt.

Auto The infrared interface is automatically set to the next available combination (address, interrupt).

Disabled The infrared interface is disabled.

Parallel port

This field selects the address and the interrupt used to access the relevant parallel port.

378h, IRQ7, *278h, IRQ5*, *3BCh, IRQ7*, *378h, IRQ5*
The parallel port is set to the shown address and interrupt.

Auto The parallel port is automatically set to the next available combination (address, interrupt).

Disabled The parallel port is disabled.

Parallel Port Mode - Parallel data transfer

This field defines whether the parallel port is to be used as a bi-directional input/output port or just as an output port. *ECP* and *EPP* transfer modes allow faster transfer rates of 2 and 2.4 Mbytes/s. These modes will only work with peripheral devices which support them. In addition, the field *Parallel* must be set to *378h* or *278h*.

Bi-Directional
Data can be transferred in both directions across the port.

EPP Fast transfer mode (up to 2 Mbytes/s), can output and receive data. The mode requires a peripheral device which supports the EPP (Enhanced Parallel Port) transfer mode.

ECP Fast transfer mode (up to 2,4 Mbytes/s), can output and receive data. The mode requires a peripheral device which supports the ECP (Enhanced Capability Port) transfer mode.

Output Only
The port functions as an output port only.

ECP channel - DMA channel for ECP mode

You can select different DMA channels for ECP mode:

DMA CH3*/DMA CH1*
The channel displayed is selected for ECP mode.

Disabled No channel is selected for ECP mode.

On-board IDE Adapter - IDE hard disk drive controller

This field is used to enable and disable the built-in IDE hard disk drive controller of the notebook.

Primary The primary IDE hard disk drive controller is enabled. IRQ14 is occupied.

Secondary The secondary IDE hard disk drive controller is enabled. IRQ15 is occupied.

Disabled The IDE hard disk drive controller of the notebook is disabled.

Diskette Controller - Floppy disk drive controller

This field is used to enable and disable the built-in floppy disk drive controller on the system board.

Enabled The floppy disk controller is enabled - IRQ 6 is used.

Disabled The floppy disk controller is disabled - IRQ 6 is free.

On Board Audio - Audio controller

This field is used to enable and disable the built-in audio controller on the system board.

Enabled The chip is enabled

Disabled The chip is disabled

i The following fields are only visible if the *On Board Audio* field is set to *Enabled*.

I/O Channel - I/O address

The I/O channel can be set to various basic addresses.

220h, *230h, 240h, 250h*
The I/O channel is set to the address displayed.

Capture IRQ Channel - Capture interrupt

This field is used to specify the interrupt for the capture. The wave interrupt can be set to various IRQs.

IRQ5, *IRQ7, IRQ9, IRQ10*
The wave interrupt is set to the interrupt displayed.

Playback IRQ Channel - Playback interrupt

This field is used to specify the interrupt for the playback. The playback interrupt can be set to various IRQs.

IRQ11, *IRQ15*
The playback wave is set to the interrupt displayed.

Capture DMA Channel - DMA channel for playback

The DMA channel for playback can be set to various values.

DMA CH1, *DMA CH0, DMA CH3*
The DMA channel is set to the value displayed.

Playback DMA Channel - DMA channel for capture

The DMA channel for capture can be set to various values.

DMA CH5, *DMA CH6*
DMA channel 2 is set to the value displayed.

MPU I/O - I/O Address of the MIDI Port

The I/O address of the MIDI port can be set to different values.

300h, *310h, 320h 330h*
The I/O address is set to the value displayed.

Joystick - Joystick Port

The joystick port and be enabled and disabled.

Enabled The joystick is enabled.

Disabled The joystick is disabled.

QuickPort Plus Audio - Audio options for QuickPort Plus

The fields set the audio options for the QuickPort Plus.

i QuickPortPlus Audio and the accompanying fields are only visible if the notebook is connected to a QuickPort Plus.

Speaker - Selecting the loudspeaker

Notebook The internal loudspeaker on the notebook is switched on.

QuickPort Plus
Only the external loudspeakers connected to the QuickPort Plus are switched on.

Microphone - Selecting the microphone

Notebook The internal microphone on the notebook is switched on.

QuickPort Plus
Only the external microphone connected to the QuickPort Plus is switched on.

PCI Devices - PCI configuration

This field calls the submenu to select the settings for the PC card controller and the PCI slots.

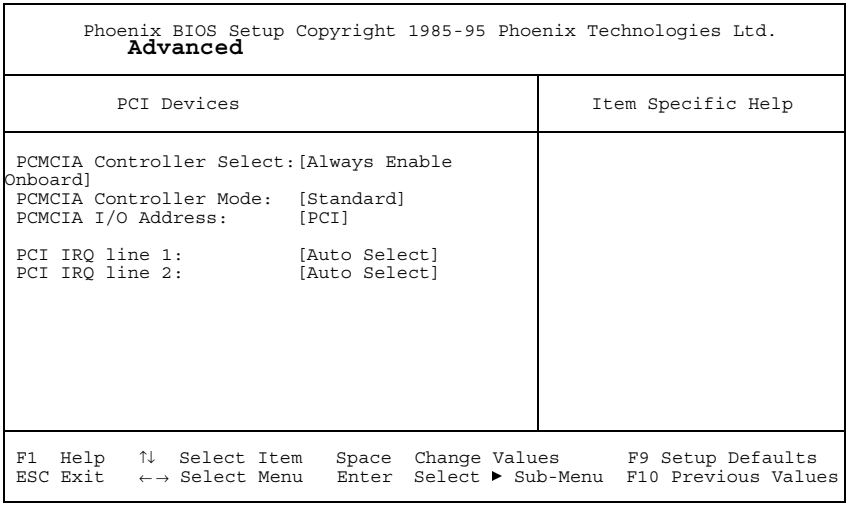

Example for submenu *PCI Devices*

i If you use an operating system that does not support plug & play, you must select *No* for the *Plug&Play O/S* field in the *Advanced* menu to ensure that the PC card controller is switched on by the system BIOS.

PCMCIA Controller Select - Selecting the PC card controller

i This field is only active if you use an operating system that does not support plug & play and have selected *No* for the*Plug&Play O/S* field in the *Advanced* menu. If you use an operating system that supports plug & play, both PC card controllers are always active.

If you use PC card drivers which support operation of only one PC card controller, you can choose whether the PC card controller is to be used in the notebook or in the QuickPort Plus.

Always Enable Onboard
The PC card controller in the notebook is always enabled. If the notebook is connected to a QuickPort Plus, the PC card controller in the QuickPort Plus is also enabled.

Auto Select QuickPort+
If the notebook is connected to a QuickPort Plus, the PC card controller in the notebook is disabled. In this case, only the PC card controller in the QuickPort Plus is enabled.

PCMCIA Controller Mode - Settings of the PC Card Controller

With this field you can specify the mode in which the PC Card Controller is to be operated.

Standard No PCI interrupt is assigned to the PC Card Controller.

Native IRQ A PCI interrupt is assigned to the PC Card Controller.

i With some operating systems (for example Windows NT) the PC Card Controller must be assigned a PCI interrupt.
Change this setting only if you encounter problems using the *Standard* setting.

PCMCIA I/O Address -
Selecting the I/O address for the PC card controller

This field is used to specify whether the PC card controller in the Notebook or in the QuickPort Plus is to be configured to the compatible base I/O address 3E0h. This may be required if you use PC card drivers other than Card & Socket Services (e.g. direct enabler).

PCI The base I/O address for the PC card controller in the notebook and in the QuickPort Plus is assigned by the system BIOS.

Legacy/Notebook
The PC card controller in the notebook is configured to the compatible base I/O addresse 3E0h.

Legacy/QuickPort+
The PC card controller in the QuickPort Plus is configured to the compatible base I/O address 3E0h.

PCI IRQ line 1,2 - Setting the PCI interrupt

This field is used to specify which PCI interrupt is to be switched to which ISA interrupt.

A multifunctional PCI board can use all PCI interrupts, if need be.

If you use a setting other than *Auto Select*, the Plug&Play functionality of the system BIOS for PCI boards is deactivated.

For monofunctional PCI boards, the PCI interrupt line 1 is assigned to the PCI slot1 and the PCI interrupt line 2 to the PCI slot 2.

Auto Select The PCI interrupt is automatically assigned in accordance with the plug & play guidelines.

3, 4, 5, 7, 10, 11
The PCI interrupt is switched to the selected ISA interrupt. You may not select an ISA interrupt that is used by a component on the system board (e.g. controller) or an ISA board.

Disabled No PCI interrupt is used for the PCI board in the assigned PCI slot. You should only select this setting if you are sure that the corresponding PCI board does not require an interrupt. Otherwise, errors may occur.

i PCI IRQ line 1 is used by the following PCI boards: PC card controller in the notebook and in the QuickPort Plus, SCSI controller in the MobiDock. PCI IRQ line 1 or line 2 is used by one of the PCI boards in the MobiDock. This depends on the PCI board.

Memory Cache - Cache

This field calls the submenu to select the settings for the internal cache (in the processor) and the second-level cache (on the system board).

```
      Phoenix BIOS Setup Copyright 1985-95 Phoenix Technologies Ltd.
          Advanced

         Memory Cache                                  Item Specific Help

 External Cache:                [Enabled]


 Cache System BIOS Area:        [Enabled]
 Cache Video BIOS Area:         [Enabled]

 Cache Memory Regions
    C800 - CBFF:                [Disabled]
    CC00 - CFFF:                [Disabled]
    D000 - D3FF:                [Disabled]
    D400 - D7FF:                [Disabled]
    DC00 - DFFF:                [Disabled]

F1  Help   ↑↓  Select Item   Space  Change Values      F9 Setup Defaults
ESC Exit   ←→  Select Menu   Enter  Select ► Sub-Menu  F10 Previous Values
```

Example of the submenu *Cache - Memory Cache*

External Cache - Cache utilization

This field is used to enable and disable the external cache. The cache is a buffer to which parts of the main memory and BIOS can be temporarily copied. The notebooks performance is higher when the cache is enabled. You must disable the cache:

- if the access time is too short for older applications
- if you are installing *OS/2 Warp*.

Enabled Internal (first-level cache) and external cache (second-level cache) are enabled. If there is no external Cache, only the internal cache is used.

Disabled Only the internal cache is used.

Cache System BIOS Area/ Cache Video BIOS Area

Condition: The *Cache* field must be set to *Enabled*.

Cache System BIOS Area and *Cache Video BIOS Area* lets you specify the BIOS that should be mapped to the cache. Mapping the BIOS to the cache increases system performance.

Enabled The specified BIOS is mapped to the cache.

Disabled The specified BIOS is not mapped to the cache.

Cache Memory Regions

Condition: The *Cache* field must be set to *Enabled*.

Cache Memory Regions lets you specify the BIOS ROM areas that should be mapped to the cache. Mapping the BIOS ROM areas to the cache increases system performance. This is worthwhile only in conjunction with a MobiDock and built-in cards with their own ROM.

Disabled The specified BIOS ROM is not mapped to the cache.

Enabled The specified BIOS ROM is mapped to the cache.

Plug & Play O/S - Plug&Play functionality

This field is used to define the Plug&Play functionality. Plug&Play means that inserted boards are automatically recognized and installed if they support Plug&Play.

Yes The operating system takes over some of the Plug&Play functions. You should select this setting only if the operating system (e.g. Windows 95) supports Plug&Play.

No The System BIOS takes over the complete Plug&Play functionality.

Reset Configuration Data

This field is used to specify whether the configuration data is reset and reinitialized when the notebook is started.

No The built-in boards and drives are initialized with the existing configuration data. There is no update when the device is started.

Yes When the notebook is started the old configuration data is reset. The new configuration data is determined by means of the Plug&Play functionality. The mounted boards and drives are then initialized with this data.

i This field only takes effect if the notebook is connected to a MobiDock.

Large Disk Access Mode - Hard disk access

This field is used to specify the type of hard disk access for large hard disks (more than 1024 cylinders, 16 heads). The default setting depends on the operating system used.

DOS The operating system uses MS-DOS-compatible hard disk accesses.

Other The operating system uses hard disk accesses which are not MS-DOS-compatible (e.g. Novell, SCO Unix).

Security menu - Setting up the security features

You can set up the following security features in the *Security* menu

- Setting a supervisor password (in the field *Set Supervisor password*)
- Setting a user password (in the field *Set User password*)
- Activating the password query for system startup (in the field *Password on boot*)
- Blocking access to the diskette (in the field *Diskette access*)

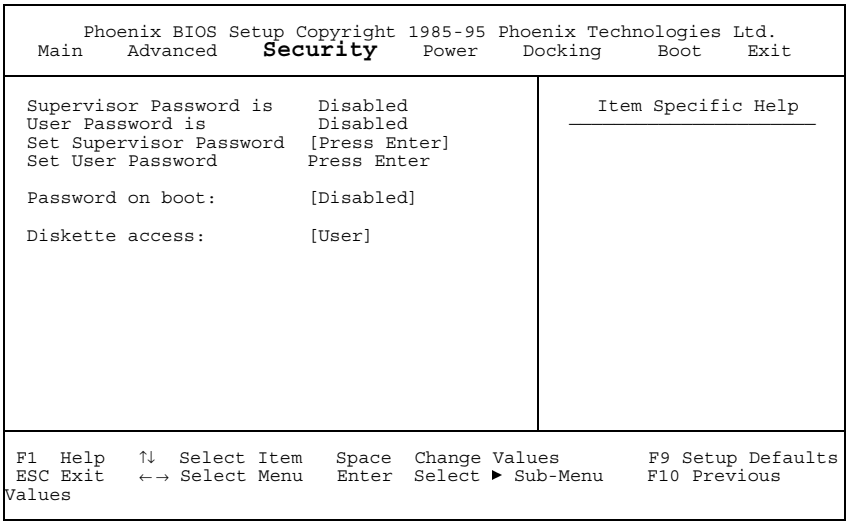

Example of the *Security* menu

Supervisor is/User Password is - Password display

Disabled, *Enabled*

These fields indicate whether the appropriate password is installed or not.

Set Supervisor Password

This field enables you to install the supervisor password.

Set User Password

This field enables you to install the user password. However, you can only assign the user password if a supervisor password has already been assigned.

Password on boot - Password query during system startup

Requirement: the supervisor password or user password must be installed.

This field is used to specify whether the password is to be queried before the operating system is booted.

Disabled The password is queried only when BIOS Setup is called.

Enabled The password is queried before the operating system is booted and when BIOS Setup is called.

Diskette access - Access privilege for disk drive

This field is used to specify whether diskettes can be accessed.

User Both users and the supervisor can access diskettes.

Supervisor Only the supervisor can access diskettes.

Power menu - Setting energy saving functions

You can set up the following energy saving functions in the *Power* menu

- Enabling of APM interface (in the *APM* field)
- Defining the effectiveness of energy saving functions (in the *PM Control* field)
- Defining the extent of energy saving functions (in the *Power Savings* field)
- Standby timer (in the *Standby Timeout* field)
- Suspend timer (in the *Suspend Timeout* field)
- Automatic display power-down (in the *Video Timeout* field)
- Doze mode (in the *Hardware Dozemode* field)
- Suspend at low battery capacity (in the *Battery Low Suspend* field)
- Suspend mode selection (in the *Suspend Mode* field)
- Resume condition selection
  (in the *Resume On Modem Ring*, *Resume On Time*, *Resume Time* fields)

```
      Phoenix BIOS Setup Copyright 1985-95 Phoenix Technologies Ltd.
  Main    Advanced    Security    Power    Docking    Boot    Exit

  APM:                        [Enabled]          Item Specific Help
  PM Control:                 [Battery Powered
Only]
  Power Savings:              [Customize]

  Standby Timeout:            [8 min]
  Suspend Timeout:            [4 min]

  Hard Disk Timeout:          [2 min]
  Video Timeout:              [2 min]
  Hardware Dozemode:          [Disable]
  Battery Low Suspend:        [Enabled]

  Suspend Mode:               [Save to DRAM]
  Resume On Modem Ring:       [OFF]
  Resume On Time:             [OFF]
  Resume Time:                [00:00:00]

 F1  Help  ↑↓  Select Item   Space   Change Values        F9 Setup Defaults
 ESC Exit  ←→ Select Menu    Enter   Select ▶ Sub-Menu    F10 Previous
Values
```

Example of the *Power* menu

APM - Enabling the APM Interface

This field is used to determine whether an operation system can change the power management settings in the system BIOS.

Disabled Changes cannot be made to power management setting by an operating system.

Enabled The operating system has access to the power management settings and can change these if necessary.

PM Control - Effectiveness of the energy saving functions

This field is used to define when the energy saving functions are effective.

Battery Powered Only
The energy saving functions are only effective, when the notebook is battery powered.

Always Enable
The energy saving functions are always effective.

Disabled The energy saving functions are disabled.

Power Savings - Extent of energy saving functions

This field is used to define the extent of the following energy saving functions.

Customize The functions set in the fields *Standby Timeout, Suspend Timeout, Hard Disk Timeout, Video Timeout, Hardware Dozemode* and *Battery Low Suspend* are effective in power management

Maximum Performance/Maximum Battery Life
These entries call predefined settings, thus determining the extent of energy saving.

Disabled None of the energy saving functions is effective.

Standby Timeout - Standby mode

This field can only be changed, if the *Power Saving* field is set to *Customize*.

1, 2, 4, 6, 8, 12, 16, 32 min
The system switches to standby mode after the specified time without system activity.

Off The notebook does not switch to standby mode.

Suspend Timeout - Suspend mode

This field can only be changed, if the *Power Saving* field is set to *Customize.*

1, 2, 4, 6, 8, 12, 16, 32 min
The system switches to suspend mode after the specified time without system activity.

Off The notebook does not switch to suspend mode.

Hard Disk Timeout - Hard disk energy saving functions

This field can only be changed, if the *Power Saving* field is set to *Customize.*

1, 2, 4, 6, 8, 10, 15, 20 min
The hard disk drive motor is switched off after the specified time without system activity.

Off The notebook does not switch off the hard disk drive motor.

Video Timeout - Display energy saving functions

This field can only be changed, if the *Power Saving* field is set to *Customize.*

1, 2, 4, 6, 8, 10, 15, 20 min
The screen goes dark after the specified time without system activity.

Off The screen does not go dark.

Hardware Dozemode

This field can only be changed, if the *Power Saving* field is set to *Customize*.

This field is used to specify whether the notebook reduces its processor speed if it is inactive for a longer period to save energy.

Disable The doze mode is disabled.

Enable The notebook reduces its processor speed if it is inactive for a longer period to save energy. The processor speed is increased as soon as the system is used again.

Battery Low Suspend - Suspend mode for low battery capacity

This field can only be changed, if the *Power Saving* field is set to *Customize*.

This field indicates whether a switch is to be made to suspend mode when the battery capacity is low.

Enabled The function is enabled; the device is switched to suspend mode when the battery capacity is low.

Disable The function is disabled.

Suspend Mode

This field specifies where the system state is saved when the device is switched to suspend mode.

Save to DRAM
The system state is buffered in the DRAM memory.

Save to Disk The system state is saved to the hard disk, and the system is switched off.

Resume On Modem Ring - Switching on for modem ring

This field specifies whether the notebook is booted when a call is made to the connected modem.
This field can be operated only if Suspend Mode is set to *Save to DRAM*.

OFF The function is disabled.

ON The function is enabled.

Resume On Time - Switching on at a fixed time

This field specifies whether the notebook is booted at a specific time. The time is set in the *Resume Time* field.
This field can be operated only if Suspend Mode is set to *Save to DRAM*.

OFF The function is disabled.

ON The function is enabled.

Resume Time - Setting the switch-on time

This field specifies whether the notebook is booted at a specific time.
This field can be operated only if *Suspend Mode* is set to *Save to DRAM* and *Resume On Time* is set to *ON*.

Docking menu - Configuring the MobiDock

The *Docking* menu is only available if the notebook is connected to a MobiDock.

You can set up the following security features in the *Docking* menu

- external floppy disk drive (in the *Diskette B:* field)
- external hard disk drive (in the fields marked *IDE Adapter 1)*
- loading the system from hard disk C: (in the *Boot Hard Disk* field)
- MobiDock password (in the *Docking Station Password is* field)

```
      Phoenix BIOS Setup Copyright 1985-95 Phoenix Technologies Ltd.
   Main    Advanced    Security    Power    Docking    Boot    Exit

   Diskette B:       [Not Installed]                  Item Specific Help

 ► IDE Adapter 1 Master              (None)
 ► IDE Adapter 1 Slave               (None)

   Boot Hard Disk:                   [Notebook]

   Integrated IDE adapter            [Secondary]
   SCSI Controller:                  [Enabled]

   Docking Station Password is      Disabled
   Set Docking Station Password     [Press
Enter]

 F1  Help    ↑↓  Select Item   Space  Change Values       F9 Setup Defaults
 ESC Exit    ←→  Select Menu   Enter  Select ► Sub-Menu   F10 Previous
Values
```

Example of the *Docking* menu

Diskette B: - Setting the external floppy disk drive

This field shows the type of the floppy disk drive in the MobiDock.

Not installed A floppy disk drive has not been installed.

360KB - 5 1/4", 720KB - 3 1/2", 1.2MB - 51/4", 1.44MB - 3 1/2", 2.88MB - 3 1/2"
The entry depends on the floppy disk drive in the MobiDock.

IDE Adapter 1 Master/IDE Adapter 1 Slave - Setting external hard disk drives

This field shows the type of the hard disk drive in the MobiDock. How to change the settings for the hard disk drives is described in the *IDE Adapter 0* field in the *Main menu*.

Boot Hard Disk - Specifying hard disk for system load

This field is used to specify which hard disk is to be treated as hard disk C:. This is the hard disk from which the operating system is startet.

Notebook The operating system is startet from the notebook's hard disk.

MobiDock The operating system is started from the 1st MobiDock hard disk.

Integrated IDE Adapter -Setting IDE disk drives controller of the MobiDock

This field specifies whether the IDE disk drives controller of the MobiDock is enabled or disabled.

Secondary The IDE drives in the MobiDock are operated on the secondary IDE channel (IRQ15).

Disabled The IDE disk drive controller in the MobiDock is disabled.

SCSI Controller - Setting the SCSI controller of the MobiDock

This field is used to specify, whether the SCSI controller of the MobiDock is enabled.

Enabled The SCSI controller is enabled.

Disabled The SCSI controller is disabled.

Docking Station Password is - Password display

This field is only available if the notebook is connected to a MobiDock. This field is used to specify whether MobiDock access is to be controlled by means of a password.

Enabled You have to enter the docking station password in order access the MobiDock.

Disabled You can access the MobiDock without having to enter a password

i You should set a docking station password to prevent unauthorized access to the MobiDock.

Set Docking Station Password -Setting the Docking Station Password

This field enables you to install the docking station password.

Boot menu - Defining boot sequence

The *Boot* menu defines the sequence in which the system BIOS searches the drives for system files to start the operating system.

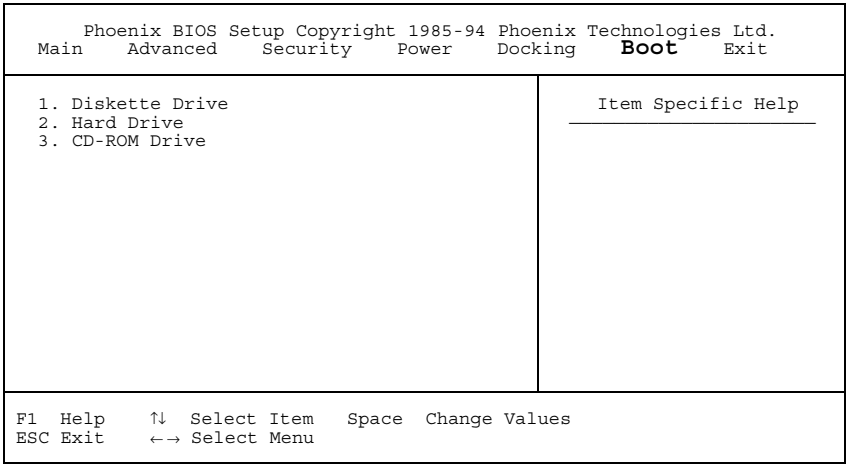

Example for the *Boot* menu

Default entry:

1. Diskette Drive
2. Hard Drive
3. CD-ROM Drive

To change this boot sequence, proceed as follows:

- Place the cursor on the entry for the drive you wish to move forward or back.
- Use the F5 key to move back the selected drive.
- Use the F6 key or the spacebar to move forward the selected drive.

Exit - Exiting BIOS Setup

In the *Exit* menu, you can save your settings and exit BIOS Setup.

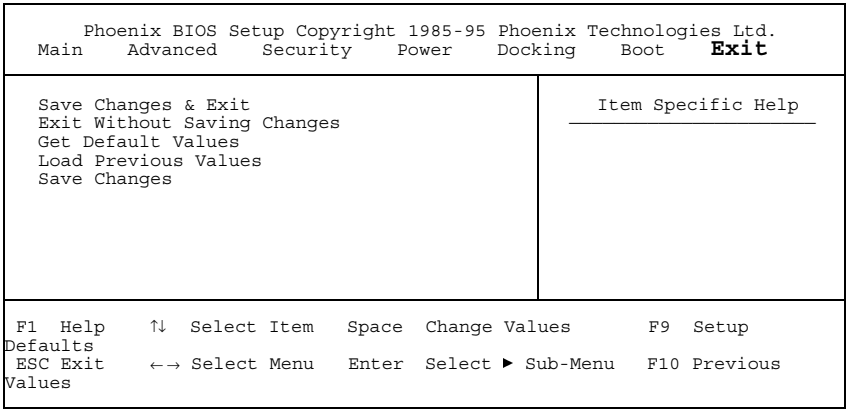

Example for the *Exit* menu

Save Changes & Exit

This field saves the settings you have made and exits BIOS Setup.

Exit Without Saving Changes

This field exits BIOS Setup without saving the new settings:

i If you have made changes to passwords, these changes are still saved.

Get Default Values

This field reverts all settings to the default values.

Load Previous Values

This field reverts all menus of BIOS Setup to the default entries.

Save Changes

This field saves the settings you have made.

Property and data protection

The software functions on your notebook enable you to protect your system and personal data in a number of ways against unauthorized access. By combining these options, you can achieve optimum protection for your system.

Security functions under Windows 95

Under Windows 95 you can activate a screen saver and protect it with a password. Only those users who know the password can deactivate the screen saver and access any open files.

BIOS Setup security functions

The *Security* menu in *BIOS Setup* offers you various options for protecting your system and personal data from unauthorized access. By combining these options, you can achieve optimum protection for your system.

If `CapsLK`, `NumLK`, `PadLK` and `ScrLK` are displayed in turn in the display field, you must enter a password.

Preventing unauthorized BIOS Setup calls

You can activate this protection by setting a supervisor password in the *Security* menu (*Set Supervisor Password*).

Preventing unauthorized system access

You can activate this protection by setting a user password in the *Security* menu (*Set User Password*). In addition, you must select the entry *Enabled* in the *Password on boot* field.

Preventing unauthorized access to floppy disk drive

To activate this protection, select the value *Supervisor* for the *Diskette access* field in the *Security* menu.

Preventing unauthorized access to MobiDock

You can only activate this protection if the notebook is connected to a MobiDock.

You can activate this protection by setting a docking station password in the *Docking* menu (*Set Docking Password*).

Setting supervisor password

The supervisor password prevents unauthorized callup of *BIOS Setup*. *BIOS Setup* can be called only by those who know the supervisor password.

The password can be at most seven characters long. All alphanumerical characters can be used; no differentiation is made between upper case and lower case.

Passwords are not displayed as they are entered.

If you have forgotten your supervisor password, please contact your technical customer service.

To set or change the supervisor password, proceed as follows:

- Call *BIOS Setu*p and select the *Security* menu (see "Settings in BIOS Setup").
- Mark the *Set Supervisor Password* field and press the Enter key.

You are asked to enter a password:

```
Enter new Password:
```

- Enter the supervisor password and press the Enter key.

You are asked to confirm the password:

```
Re-enter new Password:
```

- ► Enter the supervisor password again and press the Enter key.

The new password is saved

```
Notice: Changes have been saved    [continue]
```

If you do not want to change any other settings, you can exit *BIOS Setup*.

- ► Select option *Save Changes & Exit* in the *Exit* menu.

The notebook is rebooted and the new supervisor password is effective.

Canceling the supervisor password

i If you cancel the supervisor password, you automatically deactivate the user password.

To cancel the supervisor password (without setting a new password):

- ► Call *BIOS Setu*p and select the *Security* menu (see "Settings in BIOS Setup").
- ► Mark the *Set Supervisor Password* field and press the Enter key.

You are asked to enter a password:

```
Enter new Password:
```

- ► Press the Enter key twice.
- ► Select option *Save Changes & Exit* in the *Exit* menu.

The notebook is rebooted and the supervisor password is canceled.

Setting user password

The user password prevents unauthorized access to your notebook. With the user password you can prevent booting of the operating system. The system can be accessed only by those who know the user password.

You must also set a supervisor password to make the user password effective.

i

The password can be at most seven characters long. All alphanumerical characters can be used; no differentiation is made between upper case and lower case.

Passwords are not displayed as they are entered.

If you have forgotten your user password, please contact your technical customer service.

To set or change the user password, proceed as follows:

- Call *BIOS Setu*p and select the *Security* menu (see "Settings in BIOS Setup").
- Mark the *Set User Password* field and press the Enter key.

You are asked to enter a password:

```
Enter new Password:
```

- Enter the user password and press the Enter key.

You are asked to confirm the password:

```
Re-enter new Password:
```

- Enter the user password again and press the Enter key.

The new password is saved

```
Notice: Changes have been saved    [continue]
```

- To prevent booting of the operating system, mark the *Password on boot* field and select the value *Enabled*.

If you do not want to change any other settings, you can exit *BIOS Setup*.

- Select option *Save Changes & Exit* in the *Exit* menu.

The notebook is rebooted and the new user password is effective.

Canceling user password

To cancel the user password (without setting a new password):

- Call *BIOS Setu*p and select the *Security* menu (see "Settings in BIOS Setup").
- Mark the *Set User Password* field and press the Enter key.

You are asked to enter a password:
`Enter new Password:`

- Press the Enter key twice.
- Select option *Save Changes & Exit* in the *Exit* menu.

The notebook is rebooted and the user password is canceled.

Setting docking station password

The docking station password prevents unauthorized access to the MobiDock if the notebook is attached to a MobiDock The MobiDock can be accessed only by those who know the docking station password.

The password can be at most seven characters long. All alphanumerical characters can be used; no differentiation is made between upper case and lower case.

Passwords are not displayed as they are entered.

If you have forgotten your docking station password, please contact your technical customer service.

To set or change the docking station password, proceed as follows:

- Call *BIOS Setu*p and select the *Docking* menu (see "Settings in BIOS Setup").
- Mark the *Set Docking Password* field and press the Enter key.

You are asked to enter a password:

```
Enter new Password:
```

- Enter the docking station password and press the Enter key.

You are asked to confirm the password:

```
Re-enter new Password:
```

- Enter the docking station password again and press the Enter key.

The new password is saved

```
Notice: Changes have been saved    [continue]
```

If you do not want to change any other settings, you can exit *BIOS Setup*.

- Select option *Save Changes & Exit* in the *Exit* menu.

The notebook is rebooted and the new docking station password is effective.

Canceling docking station password

To cancel the docking station password (without setting a new password):

- Call *BIOS Setu*p and select the *Docking* menu (see "Settings in BIOS Setup").
- Mark the *Set Docking Password* field and press the Enter key.

You are asked to enter a password:

```
Enter new Password:
```

- Press the Enter key twice.
- Select option *Save Changes & Exit* in the *Exit* menu.

The notebook is rebooted and the docking station password is canceled.

Troubleshooting and tips

Take note of the safety hints in the chapter "Important notes", when you connect or disconnect cables.

If a fault occurs, try to correct it as described in this chapter. If you fail to correct the problem, proceed as follows:

- ► Switch off the notebook.
- ► Make a note of the steps and the circumstances that led to the fault. Also make a note of any error messages displayed.
- ► Contact your sales office or customer service.

The POWER LED does not light up when the device is switched on

If the POWER LED remains off, this may have the following reasons:

The battery is not installed correctly

- ► Switch off the notebook.
- ► Check whether the battery is installed correctly in its compartment.
- ► Switch on the notebook.

The battery is dead

- ► Recharge the battery or install a fully charged battery.

The power adapter is not connected correctly

- ► Switch off the notebook.
- ► Check whether the power adapter is connected correctly to the notebook.
- ► Check whether the power cable is plugged properly into the power adapter and into the power outlet.
- ► Switch on the notebook. The LED on the power adapter should light up.

The notebook's display remains blank

If your screen remains blank this may have the following reasons:

Monitor is switched off

- ► Press a key or enter the password

If the notebook is connected to a MobiDock in which a VGA or SVGA adapter is installed, the notebook's display is always switched off.

The display's contrast or brightness has been turned down

- ► If your notebook has a DSTN color display:
  Increase the contrast by pressing Fn + ← or increase the brightness with Fn + ↑ .

The notebook has been configured to drive the external monitor

- ► If your notebook has a DSTN color display:
  Press the key combination Fn + F12 or change the *Display Device Selection* in *Main Setup* to *LCD* or *LCD&CRT*

i A DSTN color display does not allow a display output at external and notebook display at the same time.

The notebook's display is difficult to read

If the display is difficult to read this may have the following reasons:

Reflexes

- Turn the notebook or alter tilt of the display.

The contrast is too low or too high

- If your notebook has a DSTN color display:
  Increase the contrast by pressing Fn + ← or reduce the contrast with Fn + → .

The brightness is too low or too high

- If your notebook has a DSTN color display:
  Increase the brightness by pressing Fn + ↑ or reduce the brightness with Fn + ↓ .

The external monitor stays blank

If your monitor remains blank this may have the following reasons:

Monitor is switched off

- Switch the external monitor on.

Screen has been blanked

- Press any key to continue.

Brightness control is set to dark

- Set the brightness control to light. For detailed information, please refer to the Operating Manual supplied with your monitor.

The notebook has been configured to drive the internal display

- Press the key combination Fn + F12 or change the *Display Device Selection* in *Main Setup* to *CRT* or *LCD&CRT*.

The external display's power cable or data cable is not connected properly

- Switch off the external monitor and the notebook.
- Check whether the power cable is plugged properly into the power adapter and into the power outlet.
- Check whether the data cable is properly connected to the notebook and the external monitor (if it is plugged in with a connector).
- Switch on the external monitor and the notebook.

The external display is blank or the image is unstable

The wrong frequency has been selected for the external monitor or for the application program.

- Terminate the application program in Windows 95 with Alt + F4 . If the error persists after the program has been terminated, switch the external monitor off, wait at least three minutes, and then switch the external monitor on again.
- Select the correct display resolution for the application in Windows 95 with *Start/Settings/Control Panel/Display/Settings.*

The notebook stops working

If the notebook stops working, this may have the following reasons:

The notebook is in Standby or Suspend mode

- Reactivate the notebook by pressing a key (Standby mode) or by switching it on (Suspend mode).

An application program has caused the malfunction

- Close the application program or restart the notebook (by switching it on/off or with a warm boot).

The battery is dead

- Recharge the battery or install a fully charged battery.

The touchpad does not work

If the touchpad does not work, it can have the following reasons:

Incorrect setting in Main Setup

- Check whether the field *Internal Mouse* in the *Main Setup* is set to *Enabled*.

The mouse does not work

If the connected mouse does not work this may have the following reasons:

Incorrect setting in Main Setup

- Check whether the field *Internal Mouse* in the *Main Setup* is set to *Disabled*.
- Check the *COM Port* field in the submenu *Integrated Peripherals* of the *Advanced Setup* to ensure that serial port is enabled and set correctly.

Mouse driver not loaded

- Check whether the required mouse driver is properly installed and is present when the application program is started. Detailed information can be found in the User Guides of the mouse or application program.

Mouse not connected

- ► Switch off the notebook.
- ► Check whether the mouse cable is connected correctly to the notebook. If you use an adapter or extension lead with the mouse cable, check the connector.
- ► Switch on the notebook.

The floppy disk cannot be written

- ► Check whether that floppy disk is OK and is not write-protected.

The battery drains quickly or becomes hot

- ► Deep discharge the battery or perform the battery learning cycle.

If this does not succeed, you must change the battery for a new one. When you dispose of used up batteries, please observe the safety instructions in the chapter "Important Information".

The notebook's date or time is incorrect

- ► Set the time and/or date in the *Main Setup*.

i If the date and time are repeatedly incorrect when you switch on the notebook, the backup battery that supplies the internal clock is dead. Connect the notebook via its power adapter to a grounded power outlet or install a fresh battery. The backup battery will charge fully in roughly two days.

The printer does not print

- ► Make sure that the printer is switched on and on-line (see the manuals supplied with the printer).
- ► Check that the printer cable connecting the notebook and the printer is connected properly.
- ► Check that the correct printer driver is installed.
- ► Check the submenu *Integrated Peripherals* of the *Advanced Setup* to ensure that port you are using is set correctly. The *COM Port* or *Parallel Port* or *Parallel Port Mode* setting, should match the settings in your application program under Windows 95

The battery symbol is flashing

The battery is dead or no battery is installed
It the BATTERY LED is flashing, the battery is empty. If the BATTERY display does not light up, either no battery is installed or there is no contact between the notebook and the battery.

- ► Check whether the battery is installed correctly in its compartment.

or

- ► Charge the battery.

or

- ► Deep discharge and recharge the battery.

If this does not succeed, you must change the battery for a new one. When you dispose of used up batteries, please observe the safety instructions in the chapter "Important Information".

Acoustic warnings

A beep sounds every few seconds

The battery is almost drained.

- ▶ Charge the battery.

A single continuous beep

The notebook cannot switch to standby or suspend mode because hard disk or diskette accesses take place or there is no space provided on the hard disk.

- ▶ Wait until the hard disk or diskette accesses have terminated, or set up the required storage space on the hard disk.

Three long beeps

The notebook cannot restore the programs that were active when it switched to Suspend mode.

Error messages on the screen

This section describes the error messages generated by the system BIOS. Error messages displayed by the operating system or programs are described in the relevant manuals.

Diskette read failure - press F1 to retry boot

The inserted system disk is defective

- ▶ Insert another system disk.
- ▶ Press function key F1.

No boot device available - press F1 to retry boot

The operating system cannot be loaded

- ► Insert a system disk.
- ► Press the function key F1.

No boot sector on fixed disk - press F1 to retry boot

The operating system is not installed on the hard disk or the hard disk has not been formatted.

- ► Insert a system disk.
- ► Press the function key F1.

Not a boot disk - press F1 to retry boot

The disk in the floppy drive is not a system disk.

- ► Remove the floppy disk from the drive.
- ► Press the function key F1.

If you wish to boot from floppy disk:

- ► Insert a system disk.
- ► Press the function key F1.

Real time clock failure
Invalid configuration information - please run setup program
Press the F1 key to continue, F2 to run the setup utility

The system configuration information is incorrect.

- ► Press the function key F2.
- ► Reconfigure the system.

If the error message is displayed again, the notebook's backup battery is empty. Connect the notebook via its power adapter to a grounded power outlet or install a fresh battery. The backup battery will charge fully in roughly two days.

Resume not possible in the docking unit.
Please, switch off, disconnect the notebook from the docking unit for resume OR
press <F1> for continue and lose the suspended state.

If the notebook is connected to a MobiDock, it cannot restore the programs that were active when it switched to Suspend mode.

If you press function key F1 , the suspended system status will be lost

- Switch off the notebook and the MobiDock.
- Remove the notebook from the MobiDock.
- Switch on the notebook.

Restoring the hard disk contents under Windows 95

If your notebook is equipped with a CD-ROM, you can reinstall Windows 95 with the Windows 95 OEM CD supplied. You must then reinstall all the drivers. To do this use the driver diskettes you created earlier using the *Create Driver Disks* icon.

If your notebook is not equipped with a CD-ROM drive you can use the backup diskettes that you created after the installation of Windows 95 to restore the hard disk to the as-supplied status.

Restoring the hard disk contents from CD

- Insert the Windows 95 OEM CD into the CD-ROM drive.
- Start the *Setup* program on the CD.
- You must then reinstall all the drivers. To do this use the driver diskettes you created earlier using the *Create Driver Disks* icon.

System expansions

Install only system expansions that satisfy the requirements and rules governing safety, RFI and electromagnetic compatibility and relating to telecommunications terminal equipment (see the chapter "Important notes").

Memory expansion

The notebook is fitted with a standard 8 Mbytes of main memory. The main memory can be increased with additional memory modules.

Use only memory expansion which has been released for your notebook. You must always install or remove two memory modules.

Never use force when installing or removing memory modules.

Make sure that no foreign objects fall into the memory module compartment.

Mobile 500

The main memory of the notebook Mobile 500 can be increased with two additional memory modules to either 16 Mbytes, 24 Mbytes or 40 Mbytes.

Mobile 700

The main memory of the notebook Mobile 700 can be increased with two or four additional memory modules to either 16 Mbytes, 24 Mbytes, 32 Mbytes, 40 Mbytes, 48 Mbytes or 72 Mbytes.

Installing memory modules

- ► Switch off the notebook.
- ► Remove the battery.
- ► Pull the power plug of the power adapter out of the power outlet.
- ► Close the display of the notebook so that it locks into place on the left and right.
- ► Disconnect all cables connected to notebook.
- ► Place the notebook bottom-up on a flat surface.

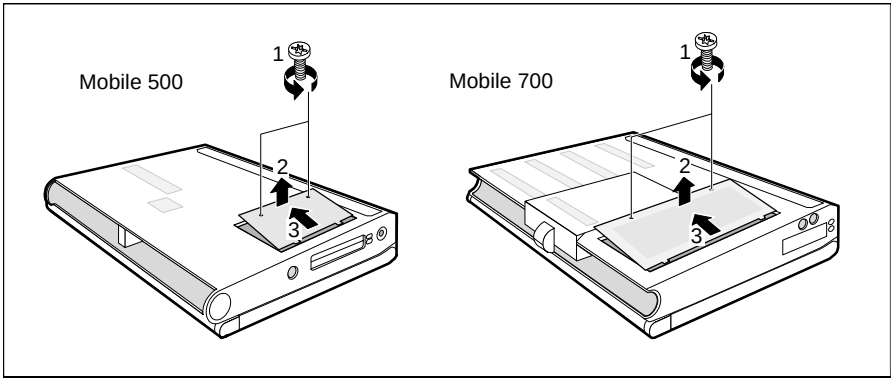

- ► Remove the two screws (1).
- ► Lift the memory compartment cover (2) and pull it in the direction of the arrow (3).

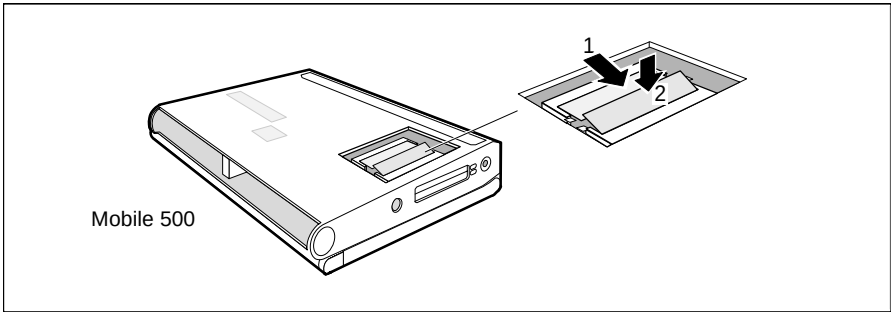

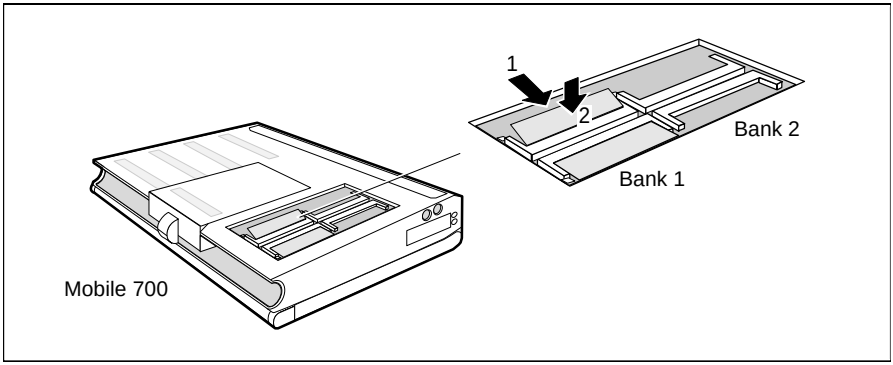

- ► Insert the memory modules, contacts first, into the slot (1).
  With the Mobile 700 notebook, you must equip bank 1 with memory modules first.
- ► Carefully flap the memory module down (2) until you feel it latch in place.
- ► Install the other memory modules in the same way.

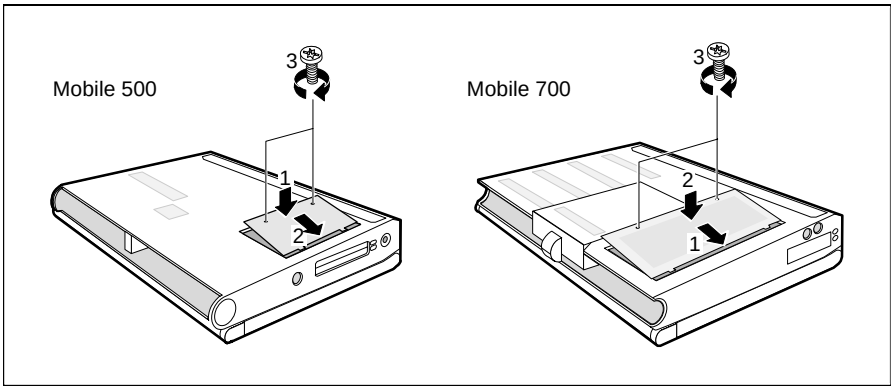

- ► Place the cover on its mounting location (1) and flap it into place on the underside of the notebook (2).
- ► Fasten the cover with the two screws (3).
- ► Place the notebook bottom-down on a flat surface.
- ► Reconnect the cables that you disconnected before.
- ► Swing open the display.
- ► Install the battery.

Removing memory modules

- ► Switch off the notebook.
- ► Remove the battery.
- ► Pull the power plug of the power adapter out of the power outlet.
- ► Close the display of the notebook so that it locks into place on the left and right.
- ► Disconnect all cables connected to notebook.
- ► Place the notebook bottom-up on a flat surface.

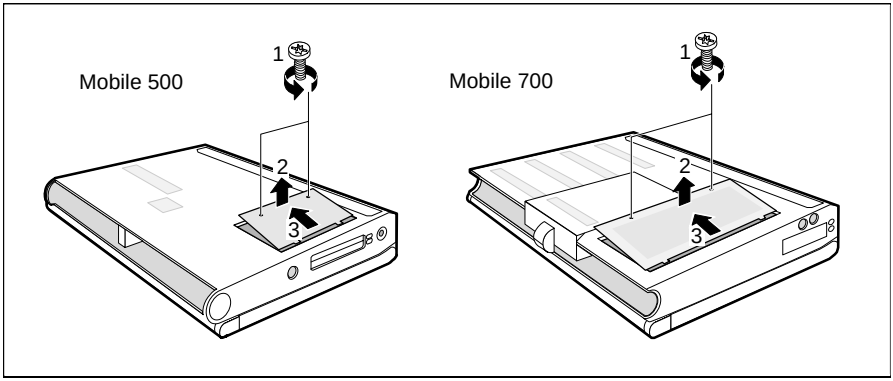

- ► Remove the two screws (1).
- ► Lift the memory compartment cover (2) and pull it in the direction of the arrow (3).

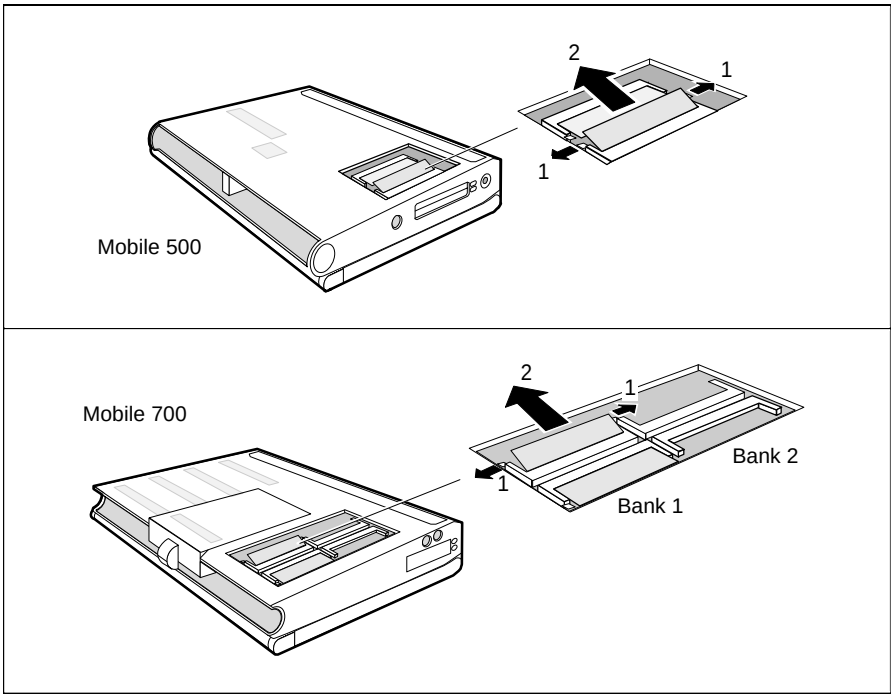

- ► Carefully push the two mounting clips outwards (1).
  The memory module flaps upwards.
  With the Mobile 700 notebook you must remove the memory modules of bank 2 first.
- ► Slide the memory module out of its location (2).
- ► Remove the other memory modules in the same way.

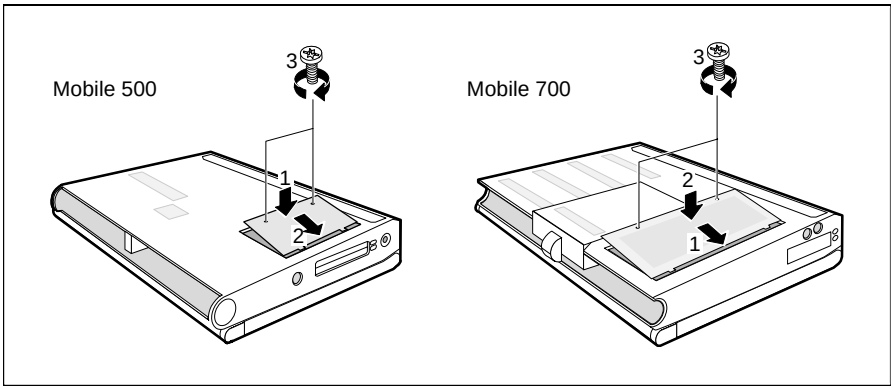

- ► Place the cover on its mounting location (1) and flap it into place on the underside of the notebook (2).
- ► Fasten the cover with the two screws (3).
- ► Place the notebook bottom-down on a flat surface.
- ► Reconnect the cables that you disconnected before.
- ► Swing open the display.
- ► Install the battery.

Replacing a built-in hard disk

The following section tells you how to replace the built-in hard disk in the Mobile 700 notebook.

To replace the built-in hard disk in the Mobile 500 notebook, please contact one of our IT Service Shops, your sales partner or your sales office.

Use only hard disks which have been released for your notebook.

Never use force when installing or removing hard disk drives.

Make sure that no foreign objects fall into the hard disk compartment.

- ► Switch off the notebook.
- ► Remove the modules from both slots (e. g. battery, disk drive).
- ► Pull the power plug of the power adapter out of the power outlet.
- ► Close the display of the notebook so that it locks into place on the left and right.
- ► Disconnect all cables connected to notebook.
- ► Place the notebook bottom-up on a flat surface.

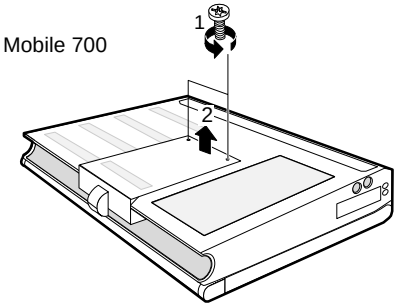

- ► Remove the two screws (1).
- ► Lift off the cover (2).

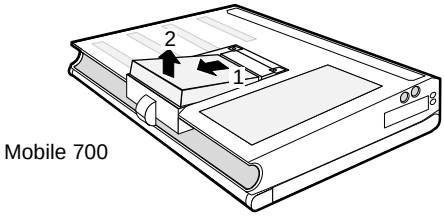

- ► Push the hard disk forwards (1).
- ► Lift out the hard disk (2).

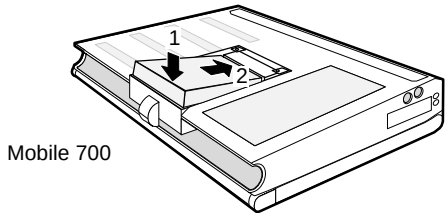

- ► Insert the new hard disk so that the contacts point to the rear (1).
- ► Push the hard disk backwards (2).

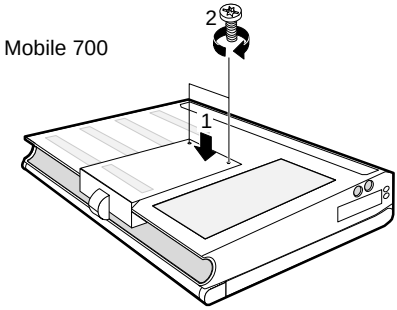

- ► Place the cover on its mounting location (1).
- ► Fasten the cover with the two screws (2).
- ► Place the notebook bottom-down on a flat surface.
- ► Reconnect the cables that you disconnected before.
- ► Swing open the display.
- ► Re-install the modules (e.g. batteries, floppy disk drive)

Connecting external devices

Disconnect all the devices from their respective power sources when you connect or disconnect a device.

Read the documentation about the external device before connecting it.

Do not connect or disconnect cables during a thunderstorm.

Never unplug a cable by pulling the cable itself. Always take hold of the actual plug body!

Connect and disconnect the cables in the order described below.

Connecting cables

- Turn off all power and equipment switches.
- Pull all power plugs out of the grounded-contact utility power sockets.
- Connect all the cables to the notebook and the external devices. Please observe under all circumstances the information provided in the chapter "Important notes".
- Plug all data communication cables into the utility sockets.
- Plug all power cables into the grounded-contact utility power sockets.

Disconnecting cables

- Turn off all power and equipment switches.
- Pull all power plugs out of the grounded-contact utility power sockets.
- Unplug all data communication cables from the utility sockets.
- Disconnect all the cables from the notebook and the external devices.

Port covers and connectors

If you have not attached any external devices, you should replace the port cover. You protect the port connectors from becoming soiled.

If you wish to connect an external display or an external keyboard and an external mouse, a device with serial or parallel port, a MobiDock or a QuickPort/QuickPort Plus, you must first open the port cover:

Mobile 700

If you wish to connect an external display or a device with serial or parallel port, a MobiDock or a QuickPort/QuickPort Plus or an audio device, you must first open the port cover:

Port cover

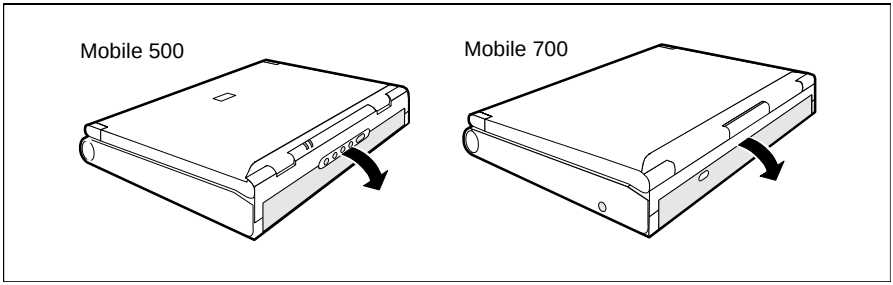

- Flap the port cover down.

You can flap the port cover onto the bottom of the notebook and lock it into place.

Ports

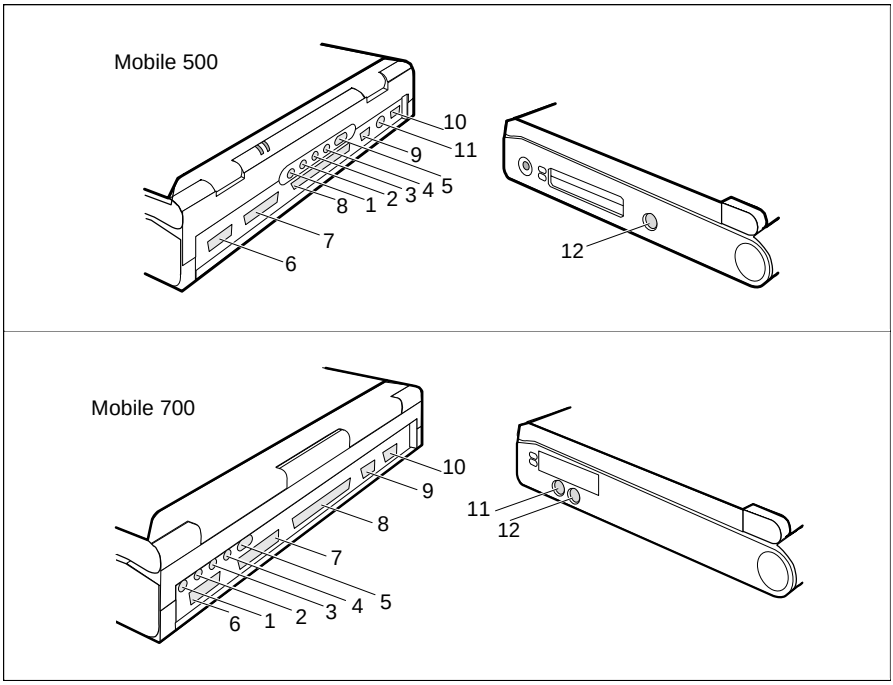

1 = Microphone port
2 = Loudspeaker port
3 = Audio input
4 = Audio output
5 = Infrared (IrDA)
6 = Game/MIDI
7 = Parallel port
8 = Connection for MobiDock or QuickPort/QuickPort Plus
9 = Monitor port
10 = Serial port
11 = PS/2 mouse port/keyboard port
12 = PS/2 mouse port/keyboard port

Connecting devices with serial or parallel port

- ► Connect the data cable of the external device to the appropriate port.

The serial port is configured by default as *COM1*. You can change the setting in the *COM Port* field in the *Integrated Peripherals* submenu in *Advanced Setup*. The parallel port is configured by default as *LPT1*. You can change the setting in the *Parallel Port* field in the *Integrated Peripherals* submenu in *Advanced Setup*.

Connecting an external monitor

You can connect a VGA, SVGA (Super VGA) or multisync monitor. The notebook's built-in display controller supports resolutions up to 1024 x 768 with 256 colors. If you wish to use a resolution greater than 640 x 480, you must load the relevant display drivers (see the manuals supplied with your display).

- ► Plug the data cable of the monitor into the monitor port.
- ► Connect the power cable of the external monitor to a power outlet and switch on the monitor.
- ► Switch on the notebook.
- ► Configure the display output in the *Display Device Selection* field in *Main Setup* or by pressing the key combination **Fn** + **F12** .
- ► Select the resolution for the external monitor.

Connecting the mouse

- ► Connect the mouse, depending on the type, to either the PS/2 mouse port or the serial port. The touchpad and the touchpad buttons are disabled when you connect a mouse.
- ► Switch on the notebook.
- ► Set the *Internal Mouse* field in *Main Setup* to *Disabled* if you want to use a serial mouse.
- ► Install the necessary device driver (see the manual supplied with the mouse).

Connecting an external keyboard

Connecting an external keyboard does not disable the notebook's built-in keyboard.

- ► Connect the external keyboard to the external keyboard port.
  If you wish to connect a keyboard with a 5-pin connector you will require an adapter from 5-pin DIN to 6-pin DIN mini connector.

i

Never press the keys on the external and internal keyboards at the same time.

If the external keyboard does not have an **Fn** key, you can press the right **Ctrl** key and the **Alt Gr** key together instead.
For example, to enter the key combination **Fn** + **F1** on the external keyboard you would press **Ctrl** + **Alt Gr** + **F1**.

Connecting external audio devices

If you attach an external microphone, the built-in microphone is disabled. If you attach an external loudspeaker, the built-in loudspeaker is disabled.

Connect the audio device (external microphone, external loudspeaker, audio output) to the appropriate port.

Connecting a MobiDock or QuickPort/QuickPort Plus

The manuals supplied with the MobiDock and the QuickPort/QuickPort Plus describe how to connect the notebook.

Read the MobiDock or QuickPort/QuickPort Plus manuals carefully before attempting to connect the notebook.

Make sure that no PC cards (PCMCIA cards) or extracting tools for PC cards are projecting from the notebook. No power adapter may be connected when you dock the notebook.

If the notebook is connected to a MobiDock in which a VGA or SVGA adapter is installed, the notebook's display is always switched off.

If you experience problems with the screen output on the external screen, test the settings in the *Display Device Selection* field of the *Main Setup*.

Makes sure that any module installed in the MobiDock or the QuickPort/QuickPort Plus do not use I/O addresses, interrupts or DMA channels already used by the notebook. Details of the I/O addresses, interrupts and DMA channels are provided in the section "Technical Data".
The maximum DMA transfer rate between MobiDock and notebook is of 5 Mbytes/second.
If necessary, you can make the I/O addresses (e.g., for the display controller) or the interrupts (e.g., for the serial or parallel port) available by disabling the relevant components in the *BIOS Setup*.

You should set a docking station password to prevent unauthorized access to the MobiDock.

When the MobiDock is switched off, you should remove the batteries from the notebook to prevent MobiDock from causing long-term capacity loss to the batteries.

Transferring data with the infrared interface

The infrared interface at the backside of the notebook enables wireless serial data transfer.

By default, the infrared interface is set to *COM2* in the setup. You can change the setting in the *IrDA Port* field in the *Integrated Peripherals* submenu in *Advanced Setup*.

i The infrared interface can only be used, when the infrared interface is enabled in the *IrDA Port* field in the *Integrated Peripherals* submenu in *Advanced Setup*.

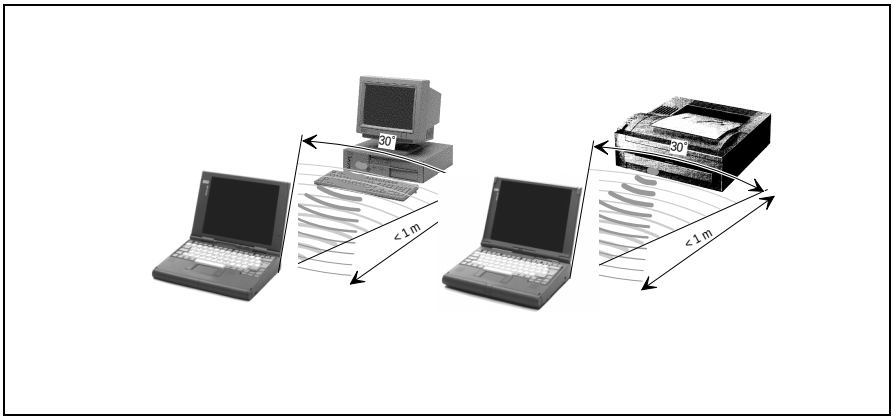

- Set up the infrared transmitter and receiver as illustrated above.
  The devices may be no more than one meter apart. The infrared interface of one device must be in the range of influence (horizontally approx. 30° and vertically approx. 15°) of the infrared interface of the other device.

Technical data

Notebook Mobile 500

Processor	Pentium P54C/LM, 100 MHz, 133 MHz or 150 MHz
Numeric processor	integrated in processor
Cache:	16 Kbytes integrated in processor
Main memory (EDO-RAM 3.3 V):	8, 16, 24 or 40 Mbytes
System ROM (flash EPROM):	256 Kbytes for system and video BIOS
Disk drives:	Floppy disk drive for 3 1/2-inch floppy disks, Hard disk drive with 810 Mbytes, 1.2 Byte or 2.1 Byte
Display:	Backlit liquid-crystal transmissive display (LCD)
Display diagonal:	
– LCD TFT	28.7 cm (11.3 inches) SVGA
– LCD DSTN	28.7 cm (11.3 inches) SVGA
Resolution / colors:	
– LCD TFT	800x600 / 262,144 colors (18 Bit)
– LCD DSTN	800x600 / 4096 colors
Display controller:	C&T 65550 on PCI bus with Windows accelerator
– Video memory(EDO-RAM):	1 Mbytes
– supported resolutions on external display	640x480 / 16.7 Mio. colors and 85 Hz 800x600 / 65,536 colors and 85 Hz 1024x768 / 256 colors and 85 Hz
Audio:	Soundchip ESS1888
– Compatibility:	Soundblaster Pro, Ad lib, MS-Soundsystem
– A/D and D/A conversion:	16 bit, Stereo

Input devices	
– keyboard:	86 keys
– touchpad	65 x 40 mm
Slots	
– PC card (PCMCIA):	2 x Type I/type II or 1x type III
Ports	
– PS/2 mouse port:	6-pin mini DIN female connector
– External keyboard port:	6-pin mini DIN female connector
– MobiDock connector:	240-pin female connector
– Parallel port:	25-pin female connector, bi-directional, EPP /ECP capable
– Port for external display:	15-pin female connector
– Serial port:	9-pin male connector, 16550 compatible
– Microphone port:	connector, mono
– Audio input:	connector, stereo
- Audio output	connector, stereo
– Port for external loudspeaker	connector, stereo
– Game/Midi	15-pin female connector
– Infrared interface (IrDA)	
Power consumption:	45 W max. (notebook on with battery charging)
Permissible temperature	
- Operation	5 °C .... 40 °C
- Transportation	-25 °C .... 60 °C
Dimensions (Width x Depth x Height)	297 mm, 218 cm, 37/54,5 mm
Weight with 1 battery (Li-Ion)	2.5 - 2.7 kg

Battery - Mobile 500

Lithium Ion battery (Li-Ion)

Rated voltage	14.4 V
Rated capacity	37 Wh 2.6 Ah
Charging time (when not in operation):	4 hours
Operating time with a battery:	ca. 3 hours (depending on application)
Weight:	380 g

Nickel-metal hydride battery (NiMH)

Rated voltage	9.6 V
Rated capacity	24 Wh 2.5 Ah
Charging time (when not in operation):	1 hour 45 minutes
Operating time with a battery:	approx. 2 hours (depending on application)
Weight:	480 g

Notebook Mobile 700

Processor	Pentium P54C/LM, 100 MHz, 133 MHz or 150 MHz
Numeric processor	integrated in processor
Cache:	16 Kbytes integrated in processor 256 Kbytes synchronous second-level cache
Main memory (EDO-RAM 3.3 V):	8, 16, 24, 32, 40, 48 or 72 Mbytes
System ROM (flash EPROM):	256 Kbytes for system and video BIOS
Disk drives:	Floppy disk drive for 3 1/2-inch floppy disks Hard disk drive with 810 Mbytes, 1.2 Byte or 2.1 Byte CD-ROM drive quadruple speed or sextuple speed MOD drive second Hard disk dive
Display:	Backlit liquid-crystal transmissive display (LCD)
Display diagonal:	
– LCD TFT	28.7 cm (11.3 inches) SVGA
– LCD TFT	30.7 cm (12.1 inches) SVGA
– LCD TFT (Display for overhead projector	30.7 cm (12.1 inches) SVGA
Resolution / colors:	800x600 / 262,144 colors (18 Bit)
– LCD 11.3 inches	800x600 / 262,144 colors (18 Bit)
– LCD 12.1 inches	
Display controller:	C&T 65550 on PCI bus with Windows accelerator
– Video memory(EDO-RAM):	2 Mbytes
– supported resolutions on external display	640x480 / 16.7 Mio. colors and 85 Hz 800x600 / 65,536 colors and 85 Hz 1024x768 / 256 colors and 85 Hz
Audio:	Soundchip ESS1888
– Compatibility:	Soundblaster Pro, Ad lib, MS-Soundsystem
– A/D and D/A conversion:	16 bit, Stereo

Input devices	
– keyboard:	86 keys
– touchpad	65 x 40 mm
Slots	
– PC card (PCMCIA):	1 x Type I/type II and 1x type III simultaneously
Ports	
– PS/2 mouse port:	6-pin mini DIN female connector
– External keyboard port:	6-pin mini DIN female connector
– MobiDock connector:	240-pin female connector
– Parallel port:	25-pin female connector, bi-directional, EPP /ECP capable
– Port for external display:	15-pin female connector
– Serial port:	9-pin male connector, 16550 compatible
– Microphone port:	connector, mono
– Audio input:	connector, stereo
- Audio output	connector, stereo
– Port for external loudspeaker	connector, stereo
– Game/Midi	15-pin female connector
– Infrared interface (IrDA)	
Power consumption:	45 W max. (notebook on with battery charging)
Permissible temperature	
– Operation:	5 °C .... 40 °C
– Transportation:	-25 °C .... 60 °C
Dimensions (Width x Depth x Height)	300 mm, 230 cm, 51.2/62.5 mm
Weight with 1 battery (Li-Ion) and CD ROM drive	approx. 3.5 kg

Battery - Mobile 700

Lithium Ion battery (Li-Ion)

Rated voltage	14.4 V
Rated capacity	56 Wh 3.9 Ah
Charging time (when not in operation):	4 hours
Operating time with a battery:	approx. 3.5 hours (depending on application)
Weight:	550 g

Nickel-metal hydride battery (NiMH)

Rated voltage	7.2 V
Rated capacity	43 Wh 6 Ah
Charging time (when not in operation):	2 hours
Operating time with a battery:	approx. 3 hours (depending on application)
Weight:	760 g

Power adapter

Primary	
– Rated voltage:	100 V to 240 V
– Rated frequency:	50 Hz to 60 Hz
– Max. rated current:	0.75 A / 1.5 A
Secondary	
– Rated voltage:	19 V
– Max. rated current:	2.4 A

Car adapter

Primary
– Rated voltage 10 V to 15 V

Secondary
– Rated voltage: 19 V
– Max. rated current: 2.4 A

CD-ROM drive

Supported CD formats:

- CD-Digital Audio
- CD-ROM (Mode 1 and Mode 2)
- CD-ROM XA (Mode 2, Form 1 and Form 2)
- CD-I (Mode 2, Form 1 and Form 2)
- CD-I Ready
- CD-Bridge
- Photo-CD (Single- and Multisession)
- Video-CD

Laser
– Class 1 Laser Product
– Type: Semiconductor laser GaA/As
– Wave length: 780 nm
– Power output: 5 mW max.

Drive performance
– Data interface: ATAPI
– Cache memory: 128 Kbytes
– Data transfer rate
quadruple speed: 600 Kbytes/s
sextuple speed: 900 Kbytes/s
– IDE interface: 10-13.3 Mbytes/s (PIO Mode 4)
– access time
quadruple speed: 300 ms
sextuple speed: 190 ms

Interrupts, I/O addresses, and DMA assignment

Modifiable internal settings (Mobile 500 / Mobile 700):

Function	I/O address	IRQ	DMA
Soundchip "ESS1888"	**220h - 22Fh ***	*Capture Wave:* **IRQ 5 * (LPT)**	*DMA-Channel 1:* **DMA 1 ***
	230h - 23Fh	IRQ 7 (LPT)	DMA 0
	240h - 24Fh	IRQ 9	DMA 3
	250h - 25Fh	IRQ 10	
	Gameport:	**+** *Playback Wave*	**+** *DMA-Channel* 2:
		IRQ 11 *	**DMA 5 ***
	201h*	IRQ 15 (2. IDE)	DMA 6
	Midi Play Unit (MPU):		
	300h - 301h		
	310h - 311h		
	320h - 321h		
	330h - 331h		
	388h - 38Bh **		
Parallel port **LPT**	**378h - 37Fh* = IRQ 7***		DMA 1 or DMA 3 only at ECP
	3BCh- 3C5h = IRQ 7		
	278h - 27Fh = IRQ 5		
	378h - 37Fh = IRQ 5		
1. Serial port **COM**	**3F8h - 3FFh* = IRQ 4 / COM1 ***		
	2F8h - 2FFh = IRQ 3 / COM2		
	3E8h - 3EFh = IRQ 4 / COM3		
	2E8h - 2EFh = IRQ 3 / COM4		
2. Serial port **COM** **=** infrared interface **IrDA**	3F8h - 3FFh = IRQ 4 / COM1		
	2F8h - 2FFh * = IRQ 3 / COM2 *		
	3E8h - 3EFh = IRQ 4 / COM3		
	2E8h - 2EFh = IRQ 3 / COM4		

* = default setting in BIOS SETUP

** = default setting when audio is enabled

Fixed internal settings (Mobile 500 / Mobile 700):

Function	I/O address	IRQ	DMA
DMA register	080h - 09Fh		
DMA controller #1	000h - 01Fh		
DMA controller #2	0C0h - 0DFh		DMA 4
Interrupt controller #1	020h - 030h		
Interrupt controller #2	0A0h - 0BFh		
Timer	040h - 050h	IRQ 0	
PCI bridge	CF8h - CFFh		
1. IDE hard disk controller (PCI)	1F0h - 1F8h, 3F6h	IRQ 14	
Realtime clock / NMI controller	070h - 07Fh	IRQ 8	
Fast A20 gate and CPU reset	092h		
numeric processor incl. clear and reset	0F0h, 0F1h, 0F8h, 0FCh, 0FEh	IRQ 13	
I/O controller	398h - 399h		
Super I/O register	0F2h - 0F3h		
Floppy disk drive controller	3F0h - 3F7h	IRQ 6	DMA 2
Display controller "C&T65550"	3B0h - 3DFh		
PC card (PCMCIA) controller "Cirrus CL-GD6730"	Automatically recognized	shared IRQ!	

Settings for external components (e.g. MobiDock, PC card):

Function	I/O address	IRQ	DMA
2. IDE-Hard disk controller in the MobiDock (PCI)	170h - 177h, 376h	IRQ 15	
Internal **SCSI** controller "Adaptec AIC7850" in the MobiDock	Automatically recognized and defined!	**Shared IRQ**	
Max. two PCI slots in the MobiDock (PCI to PCI Bridge)		**Shared IRQ**	
Max. two ISA slots in the MobiDock (PCI to ISA Bridge)	a) PnP-ISA: is automatically recognized and defined (no shared IRQ)! b) ISA (without PnP): depends on the card setting!		
PC card (PCMCIA cards): Mobile 700: max. 1x Type III + 1x Type II or 2x Type II Mobile 500: max. 1x Type III or 2x Type II - I/O cards (Modem, Network board, COM, SCSI etc.) - memory modules (e. G. SRAM, FLASH) - ATA modules (z. B. Hard disk, Sundisk)	PC cards require an IRQ (**no** shared IRQ!), I/O addresses and/or a memory area and possibly DMA. (see also the documentation on the PC card).		

* = default setting in BIOS-SETUP
PnP = Plug and Play

Shared IRQ:

Several PCI components can **share one** free ISA-**IRQ** (assignment of the IRQs is automatic).
Conflict situations with ISA cards can be prevented under DOS/WfW with the "ISA configuration utility" disk, created by the batch files in the */PROGS/DISKS* directory (IRQ, DMA, I/O address, etc. are reserved for the ISA card and are therefore no longer available for the PCI bus!).
Under Windows 95 you can change the resource contentions manually with the "Device Manager".

Port assignment

The assignment of the external ports are as follows:

DC jack (DC IN)

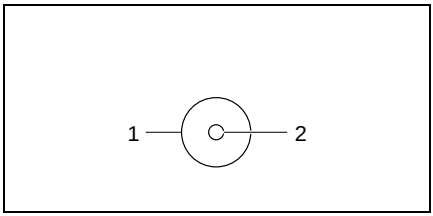

Pos.	Meaning
1	0 V
2	+19 V

Port for external keyboard and PS/2 mouse

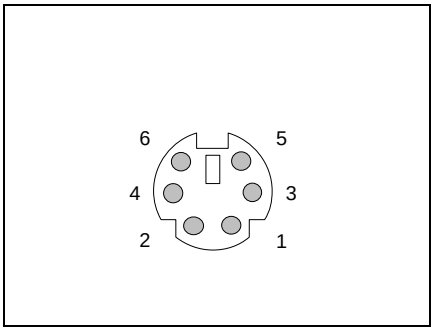

Pin	Signal name
1	Data
2	free
3	0 V
4	+5 V
5	clock
6	free

Serial port

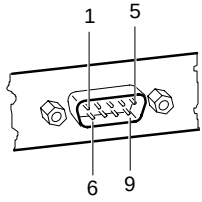

Pin	Signal name	Description
1	DCD (Data Carrier Detect)	Data Carrier Detect
2	RxD (Receive Data)	Receive Data
3	TxD (Transmit Data)	Transmit Data
4	DTR (Data Terminal Ready)	Data Terminal Ready
5	Signal Ground	Signal Ground
6	DSR (Data Set Ready)	Data Set Ready
7	RTS (Request to Send)	Request to Send
8	CTS (Clear to Send)	Clear to Send
9	Ri (Ring Indicator)	Ring Indicator

Port for external monitor

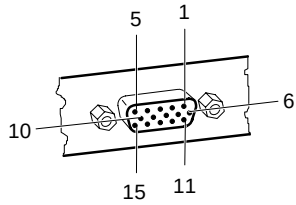

Pin	Description
1	Video output red
2	Video output green
3	Video output blue
4	reserved
5	DDC ground
6	Video ground red
7	Video ground green
8	Video ground blue

Pin	Description
9	+5V
10	logic ground
11	reserved
12	DDC data line (Bidirectional)
	horizontal synchronization
13	vertical synchronization
14	DDC clock signal line
15	

Parallel port

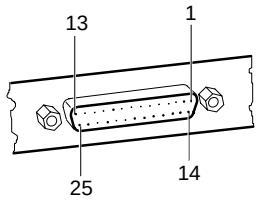

The parallel interface supports three transfer modes: SPP, EPP and ECP. SPP mode (standard parallel port) is the mode traditionally used to drive a printer. EPP (Enhanced Parallel Port) and ECP (Extended Capabilities Port) modes are transfer modes that allow transfer rates of 2 and 2.4 Mbytes/s. These modes will only work in connection with peripheral devices which specifically support them. Cases where these transfer modes are used are, for example, interface conversions between Parallel and SCSI or Parallel and IDE. The pinouts are different in all three modes.

Pinout in SPP mode (Standard Parallel Port)

Pin	Signal name	Description/direction
1	STROBE	Data message
2-9	Data Lines 0-7	Data lines 0-7
10	ACKNOWLEDGE	Data acknowledgement
11	BUSY	Not ready to receive
12	PE	End of paper
13	SELECT	Device selection
14	AUTO	Automatic new line
15	ERROR	Device error
16	INIT	Reset/initialize
17	SELECT IN	Printer selection
18-25	GROUND	Ground

Pinout in EPP mode (Enhanced Parallel Port)

Pin	Signal name	Description/direction
1	Write	output
2-9	Data Lines	Input/output
10	Intr	Input
11	Wait	Input
12	reserved	-
13	reserved	-
14	DStrb	Output
15	reserved	-
16	reserved	-
17	AStrb	Output
18-25	Ground	-

Pinout in ECP mode (Enhanced Capabilities Port)

Pin	Signal name	Description
1	HostClk	Output
2-9	Data Lines 0-7	Input/output
10	PeriphClk	Input
11	PeriphAck	Input
12	AckReverse	Input
13	Xflag	Input
14	HostAck	Output
15	PeriphRequest	Input
16	ReverseRequest	Output
17	ECP-Mode	Output
18-25	Ground	-

Keyboard layouts

Czech

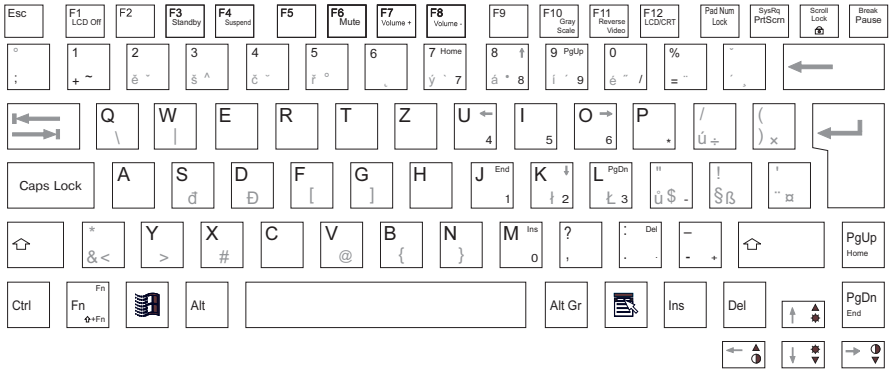

Danish

French

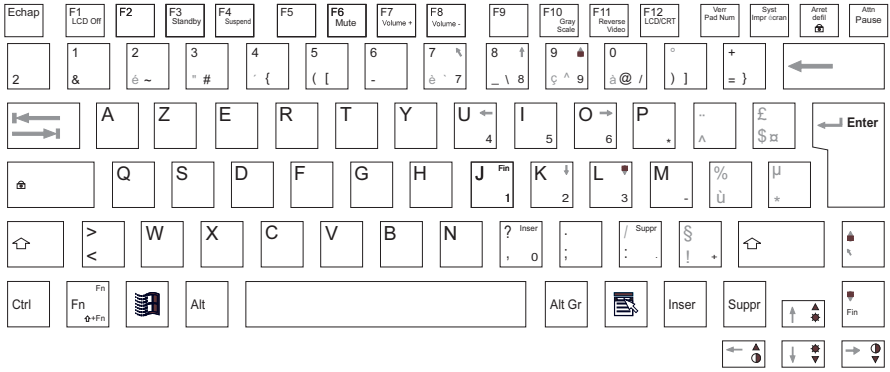

German

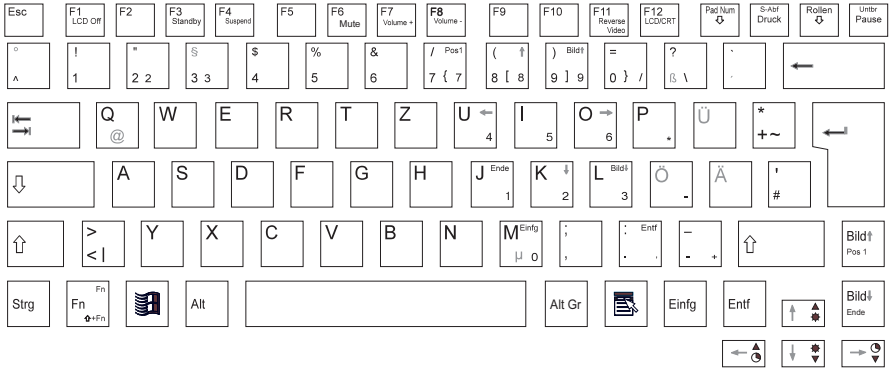

Greek

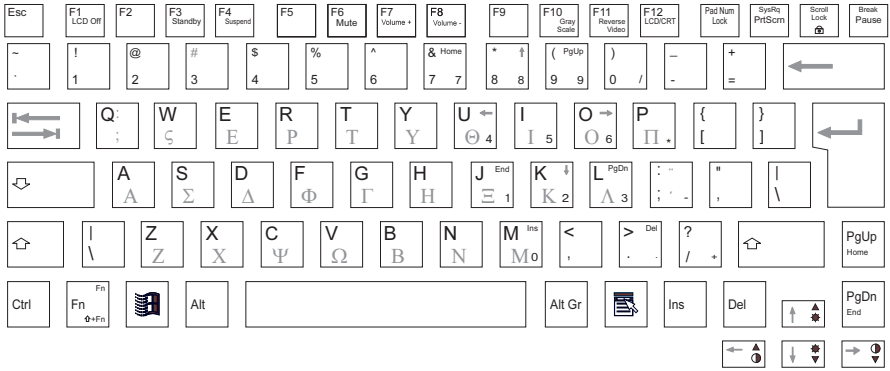

Hungarian

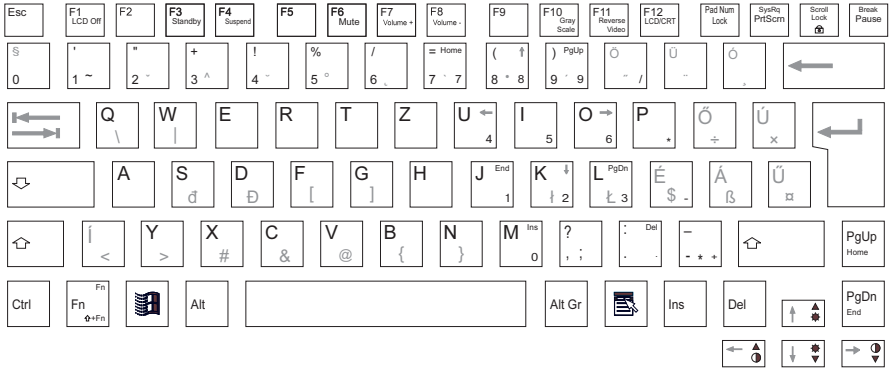

Italian

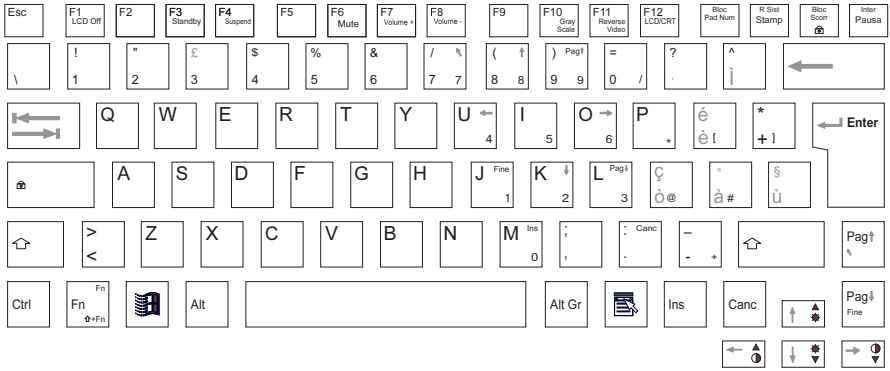

Netherlands

Norwegian

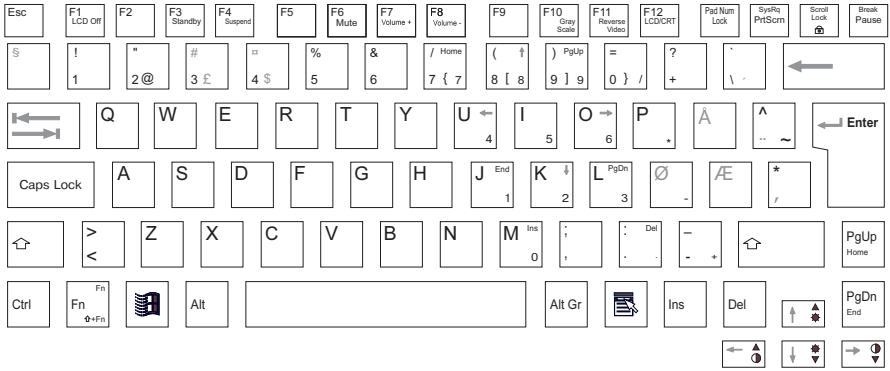

Polish

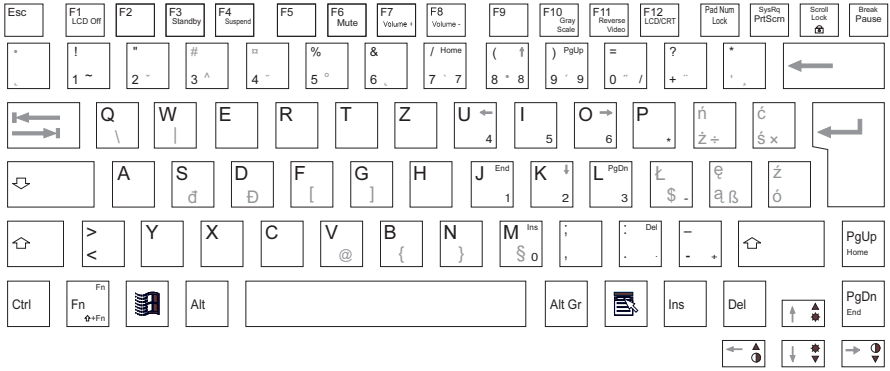
Esc
F1 LCD Off
F2
F3 Standby
F4 Suspend
F5
F6 Mute
F7 Volume +
F8 Volume -
F9
F10 Gray Scale
F11 Reverse Video
F12 LCD/CRT
Pad Num Lock
SysRq PrtScrn
Scroll Lock
Break Pause
Q
W
E
R
T
Z
U
I
O
P
A
S
D
F
G
H
J End
K
L PgDn
Y
X
C
V
B
N
M Ins
Ctrl
Fn
Alt
Alt Gr
Ins
Del
PgUp Home
PgDn End

Portuguese

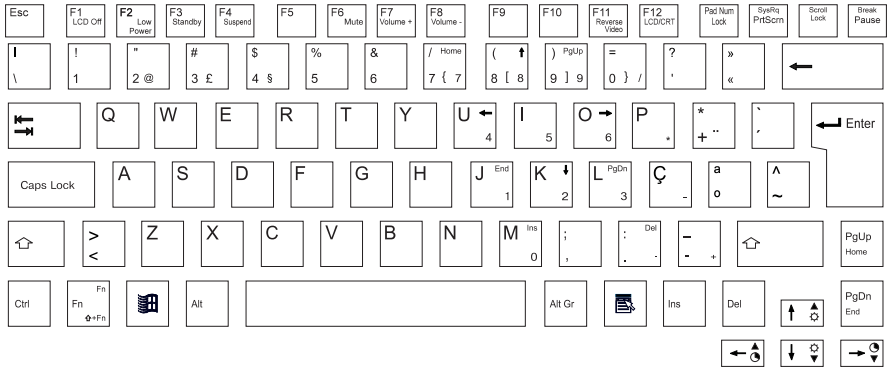

Russian

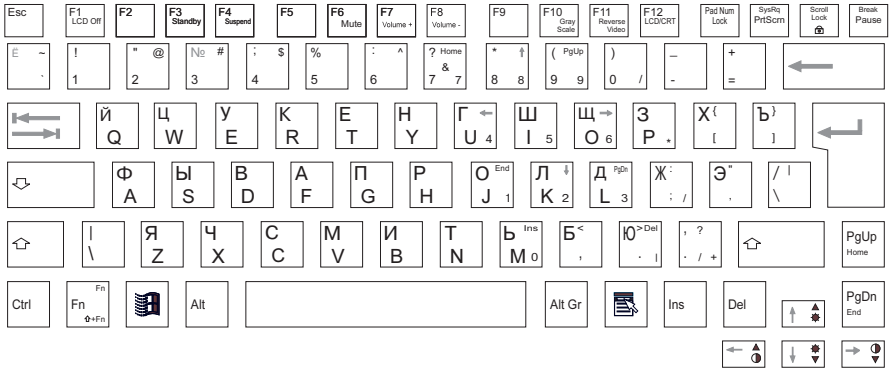

Slovakian

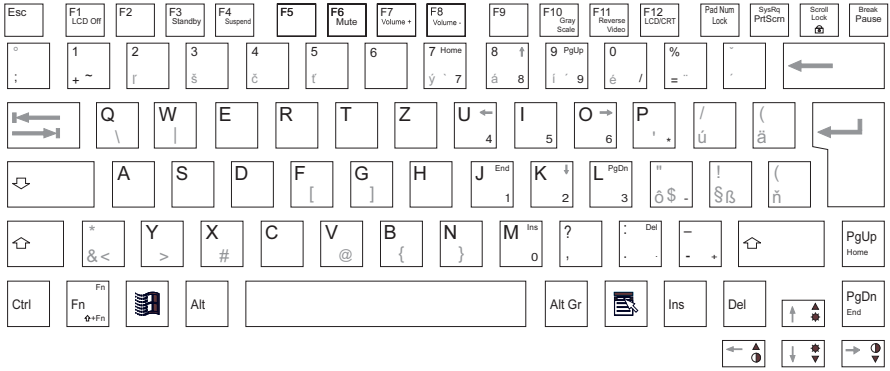

Spanish

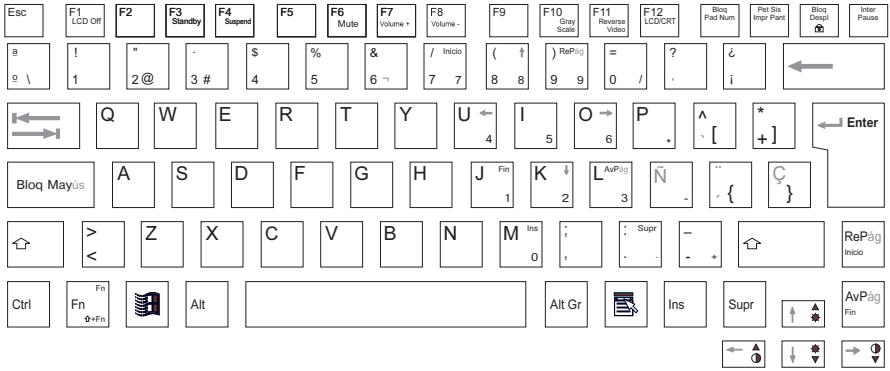

Swedish

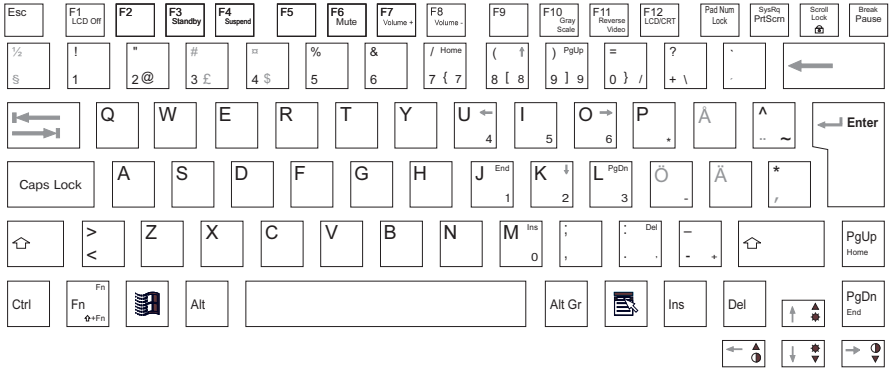

Swiss

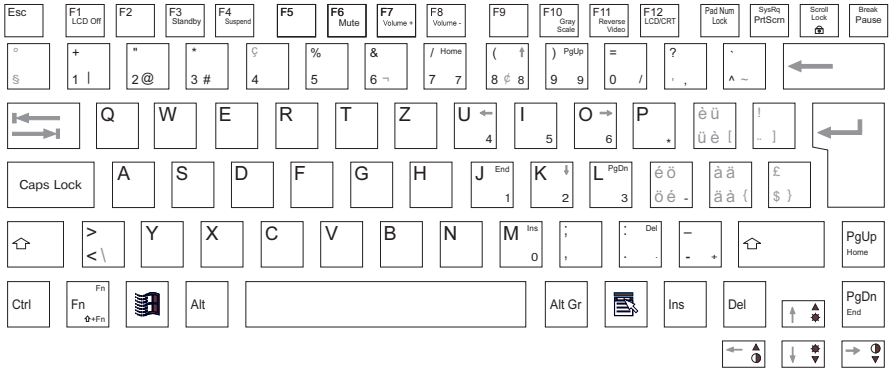

Turkish

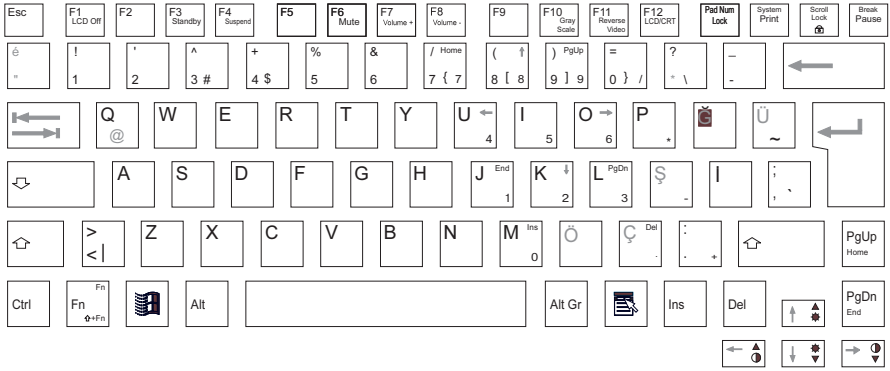

UK English

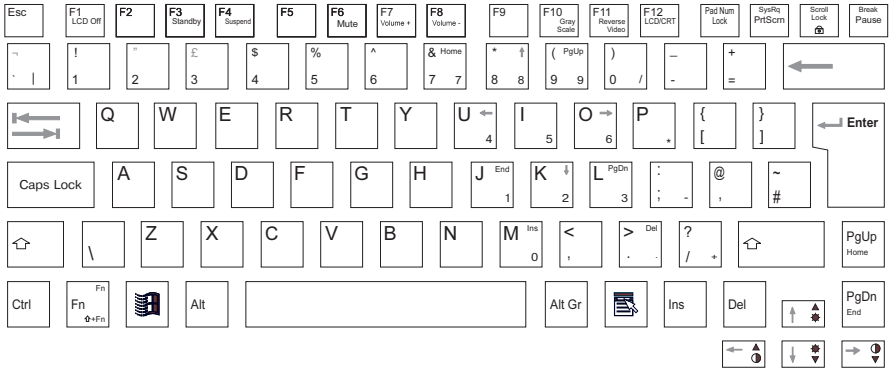

US English

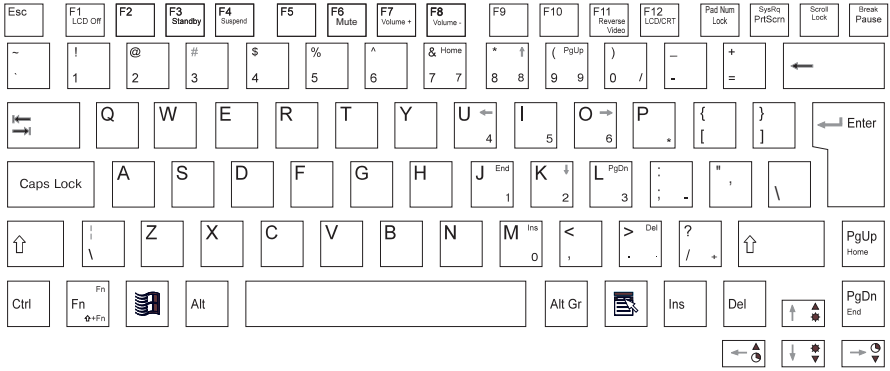
Esc
F1 LCD Off
F2
F3 Standby
F4 Suspend
F5
F6 Mute
F7 Volume +
F8 Volume -
F9
F10
F11 Reverse Video
F12 LCD/CRT
Pad Num Lock
SysRq PrtScrn
Scroll Lock
Break Pause
~ `
! 1
@ 2
# 3
$ 4
% 5
^ 6
& Home 7
* 8
(PgUp 9
) 0
_ -
+ =
Q
W
E
R
T
Y
U 4
I 5
O 6
P *
{ [
}]
Enter
Caps Lock
A
S
D
F
G
H
J End 1
K 2
L PgDn 3
: ; -
" '
\
Z
X
C
V
B
N
M Ins 0
< ,
> Del .
? / +
PgUp Home
Ctrl
Fn
Alt
Alt Gr
Ins
Del
PgDn End

Index

3
32 Bit I/O 65

A
Access Mode, hard disk 80
Access privilege for disk drive 82
Access to
    hard disk 80
    MobiDock, preventing 96
Acoustic warnings 108
Activating
    BIOS Setup protection 95
    protection to floppy disk drive access 96
    protection to system access 96
    write protection 39
Additional hard disk drive
    installing 33
    removing 35
Address
    parallel port 71
    serial port 70
Addressing 65
Adjustment, volume 48
Advanced
    BIOS Setup 69
    system settings 69
Alt Gr 25
APM Interface, enabling 84
Assignment
    DC IN 137
    DMA 134
    interface 137
    Parallel port 140
    port 138
    port for external monitor 139
Audio controller 73
Audio devices, connecting 123
Audio input 121
Audio options

for QuickPort Plus 74
Audio output 121
Audiochip 73
Available
base memory 68
extended memory 68

B
Backspace 25
Backtab (Shift+Tab) 29
Base memory 68
Battery 6, 50
becomes hot 106
capacity 11
charge, display 21
charging 50
charging with car adapter 52
charging with power adapter 51
dead 101
drains quickly 106
inserting 55
inserting in left compartment 55
inserting in right-hand compartment 56
learning cycle 54
not installed correctly 101
removing 55
removing from left compartment 55
removing from the right-hand compartment 57
status 21
symbol 21
symbol is flashing 107
Technical data 129, 132
BATTERY LED 20
Battery Low Suspend 86
Beep 108
continuous 108
sounds every few seconds 108
Bidirectional, Mode 71
BIOS ROM areas 79
BIOS Setup 59
exiting 92
Main-Setup 62
operating 61

- security functions 95
- start 27
- starting 60
- unauthorized calling 95

Block Transfer 65
Bold typeface 2
Boot
- menu 91
- sequence 91

Boot Hard Disk 89
Boot Options 67
Boot Setup 91
Booting at a specific time 87
Brightness 49
- increasing 29, 49
- reducing 29, 49
- too high 103
- too low 103
- turned down 102

Built-in
- audio controller 73
- floppy disk drive controller 72
- hard disk, replacing 116
- IDE hard disk drive controller, disabling 72
- IDE hard disk drive controller, enabling 72
- loudspeaker 42
- microphone 42

Bus width for data transfer 65
Buttons, touchpad 23
By hand, opening the CD tray 38

C

Cables
- connecting 119
- disconnecting 119

Cache 78, 79
- System BIOS Area 78
- utilization 78
- Video BIOS Area 78

Cache Memory Regions 79
Calculator keypad 24
Calling BIOS Setup 27, 60
Callup of BIOS Setup

preventing 96
Canceling
docking password 100
supervisor password 97
user password 99
Capacity, optimum battery capacity 11
Caps Lock 25
CapsLK 21
Capture
interrupt 73
Wave IRQ 73
Car adapter
connecting 52
technical data 133
Carriage Return 25
CD
diameter 35
format 35
inserting 37
manually remove 38
removing 37
supported formats 35
CD tray
opening by hand 38
CD type 35
CD-Bridge 36
CD-Digital Audio 36
CD-I 36
Ready 36
CD-ROM (Mode 1 and Mode 2) 36
CD-ROM drive
installing 33
operating 35
removing 35
technical data 133
CD-ROM XA 36
CE certificate 8
CE symbol 8
Changing
display settings 48
Supervisor password 96
Charging
battery 50

battery with car adapter 52
battery with power adapter 51
Checking
delivery 15
floppy disk drive 68
Cleaning 13
COM Port 70
COM1 70
COM2 70
COM3 70
COM4 70
Configuration
at system startup, displaying 67
BIOS Setup 59
Data 80
hardware 59
PCI 75
the MobiDock 88
Connecting
cables 119
car adapter 52
devices with parallel port 122
devices with serial port 122
external audio devices 123
external devices 119
external keyboard 123
external loudspeaker 123
external microphone 123
external monitor 122
MobiDock 124
mouse 123
power adapter 51
QuickPort/QuickPort Plus 124
Connection
MobiDock 121
QuickPort/QuickPort Plus 121
Connector 120
Contents of delivery 15
Continuous beep 108
Contrast
increasing 29, 49
reducing 29, 49
setting 49

too high 103
too low 103
turned down 102
Controller 70
audio 73
IDE hard disk drive 72
setting 70
Courier 2
Cover
PC card 42
PCMCIA card 42
port 120
Ctrl+Alt+Del 29
Ctrl+Break 29
Ctrl+C 29
Current operation, halting 29
Cursor back 29
Cursor keys 25
Cylinders, hard disk parameter 64
Czech keyboard 142

D

Danish keyboard 142
Dark
characters on a light background 48
display 102
external display 104
external monitor 103
Data protection 95
Data technical 127, 130
Data transfer
bus width 65
parallel 71
Date 62
incorrect 106
DC jack 137
DC IN 137
Deactivating write protection 39
Decoder card 41
Decreasing volume 28
Defining boot sequence 91
Devices
connecting external devices 119

with parallel port 122
with serial port 122
Disabling
built-in IDE hard disk drive controller 72
Doze mode 44
floppy disk drive controller 72
integrated numeric keypad 28
loudspeaker 28, 47
standby mode 28, 44
suspend mode 28, 45
write protection 32
Disconnecting cables 119
Disk drive 30
access privilege 82
Diskette A 63
Diskette drive 30
Diskette access 82
Diskette B 88
Diskette Controller 72
Diskettes
driver 19
utility 19
Display 20, 46
battery charge 21
BATTERY LED 20
energy saving functions 85
external 48
field 20
internal 48
internal/external 28
is difficult to read 103
off 27
on 27
POWER LED 20
power management features 46
remains blank 102
shut down 44
Display brightness 49
increasing 29
reducing 29
Display contrast 49
increasing 29, 49
reducing 29, 49

Display device, specifying 66
Display field 21
Display settings
changing 48
Display Device Selection 66
Displaying configuration at system startup 67
Disposal 8
DMA assignment 134
DMA channel 73
for capture 74
for playback 73
DMA Channel 2 74
DMA channel for ECP mode 72
Docking
menu 88
Docking password 100
setting 99
Docking Password is 90
Docking Setup 88
Doze mode 43
Dozemode 86
Drive
installing 33
removing 35
Driver diskettes 19

E

ECP
channel 72
Enhanced Capability Port 71
mode 72
mode, pinout 141
Effectiveness of energy saving functions 84
Electromagnetic compatibility 8
Electrostatic sensitive devices 7
Emergency remove, CD 38
Enabling
APM Interface 84
built-in IDE hard disk drive controller 72
Doze mode 44
floppy disk drive controller 72
hard disk's power-management feature 47
loudspeaker 28, 47

standby mode 28, 44
suspend mode 28, 45
write protection 32
Energy saving 7
Energy saving functions 83, 85
effectiveness 84
extent 84
hard disk 85
Enter key 25
EPP
Enhanced Parallel Port 71
mode, pinout 141
Error message
acoustic 108
on the screen 108
ESDs 7
ESS1888 audiochip 73
Exit 92
Exit Without Saving Changes 92
Exiting BIOS Setup 92
Expansion 111
Expansion, memory 111
Extended Memory 68
Extent of energy saving functions 84
External audio devices
connecting 123
External Cache 78
External devices
connecting 119
External display 28, 48
blank 104
External floppy disk drive 88
External hard disk drives 89
External keyboard
connecting 123
port 137
External loudspeaker
connecting 123
External microphone
connecting 123
External monitor
connecting 122
port assignment 139

stays blank 103
type 67
External mouse 23

F
F2 27, 60
Features, power-management 43
Field, selecting 61
Fixed time, switching on 87
Flashing battery 107
Floppy disk
cannot be written 106
driver 19
preventing write operations 32
utility 19
working with 32
Floppy disk drive 30, 88
checking 68
controller 72
installing 31
preventing unauthorized access 96
removing 30
type 63
write protection 32
Floppy check 68
Fn key 25
Fn+→ 29, 49
Fn+F1 27, 46
Fn+F11 28, 48
Fn+F12 28, 48
Fn+F2 43
Fn+F3 28, 44
Fn+F4 28, 45
Fn+F5 28
Fn+F6 28
Fn+F8 28, 47
Fn+Pad Num 28
Fn+Scroll 29
Fn+Tab 29
Forgotten password 60, 96
French keyboard 142

G
Game port 121
German keyboard 143
Get Default Values 92
Greek keyboard 143
Guarantee coupon booklet 15

H
Halt current operation 29
Hard disk
  access 80
  capacity 65
  drives 89
  energy saving functions 85
  for system load 89
  parameter 64
  power-management feature 47
  replacing 116
Hard disk contents
  restoring from CD 110
  restoring under Windows 95 110
Hard disk drive 63, 89
  addressing 65
  installing 33
  LBA translation 65
  parameter 63
  removing 35
  transfer mode 66
Hard disk motor shut down 44
Hard Disk Type 64
Hard Disk Timeout 85
Hardware configuration 59
Hardware Dozemode 86
Heads, hard disk parameter 64
Hungarian keyboard 144

I
I/O address 73, 134
  Midi port 74
  PC card controller 76
I/O Channel 73
IDE Adapter 72
IDE Adapter 0

Master 63
Slave 63
IDE Adapter 1
Master 89
Slave 89
IDE hard disk drive
addressing 65
LBA translation 65
transfer mode 65, 66
IDE hard disk drive controller 72
disabling 72
enabling 72
Image, unstable 104
Important notes 3
Incorrect
date 106
time 106
Increase
display brightness 29
Increasing
brightness 49
contrast 49
display contrast 29
memory 111
Performance 65
volume 28, 48
Information
CD 35
MO disks 38
Infrared interface 71
transferring data 125
Infrared port 121
Input devices 20
locking 29
Inserting
batteries 55
battery in left compartment 55
battery in right-hand compartment 56
CD 37
Installing
additional hard disk drive 33
CD-ROM drive 33
drive 33

floppy disk drive 31
memory modules 112
operating system 18
PC card 41
Integrated numeric keypad 28
Integrated IDE Adapter 89
Integrated Peripherals 70
Interface 120
Interface assignment 137
Internal
cache 78
display 28, 48
loudspeaker 42
microphone 42
Interrupt 134
capture 73
parallel port 71
playback 73
serial port 70
Introduction 1
IrDA port 71, 121
IRQ
Capture Wave 73
shared 136
IRQ3 70
IRQ4 70
IRQ5 71
IRQ7 71
Italian keyboard 144
Italics 2

J

Joystick 74

K

Key
Alt Gr 25
Backspace key 25
Caps Lock key 25
Carriage Return 25
cursor control 25
cursor keys 25
Enter 25

Enter key 25
Fn 25
Menu key 26
Pad Num 26
Pause 26
Return 25
Shift key 25
Start key 26
Tab key 25
Key combinations 27
Keyboard 24
cleaning 13
connecting external keyboard 123
Czech 142
Danish 142
French 142
German 143
Greek 143
Hungarian 144
Italian 144
locking 29
Netherlands 145
Norwegian 145
Polish 146
port 121
Portuguese 147
Russian 147
Slovakian 148
Spanish 148
Swedish 149
Swiss 149
Turkish 150
UK English 150
US English 151
Keycaps 142
Keypad, numeric 26

L

Large Disk Access Mode 80
Laser 5
Laserhänvisning 5
Laserinformation 5
Laser-ohje 5

Layouts
keyboard 142
LBA mode 65
LBA Translation 65
LCD 20, 21
Learning cycle for battery 54
LED
BATTERY 20
power 20
LEDs 20
Left compartment
inserting battery 55
removing battery 55
License number for Windows 95 19
Light characters on a dark background 48
Li-Ion battery 51
Lithium battery 6
Lithium Ion battery 50, 51, 129, 132
Load Previous Values 92
Location for Notebook 16
Locking
input devices 29
keyboard 29
mouse 29
touchpad 29
Logical Block Addressing 65
Long beeps 108
Long Life mode 43
Louder 28
Loudspeaker 42, 47, 74
louder 28
off 28
on 28
port 121
quieter 28
Low battery capacity
suspend mode 86

M

Main memory 68
Main menu 60, 62
Manually remove
CD 38

Master 63
Mechanical write protection 39
Memory 68
    above 1 Mbyte 68
    below 1 Mbytes 68
    expansion 111
    increasing 111
Memory modules
    installing 112
    removing 114
Memory Cache 78
Menu
    Advanced 69
    Docking 88
    Power 83
    Security 81
    selecting 61
Menu key 26
Messages on the screen 108
Microphone 42, 74
    port 121
Midi port 74, 121
MO disks
    notes 38
    write protected 39
MobiDock
    canceling docking password 100
    configuring 88
    connecting 121, 124
    password 90
    preventing access 96
    setting docking password 99
Mobile operation 12
MOD drive
    installing 33
    operating 38
    removing 35
Modem ring 87
Modules
    installing memory modules 112
    removing memory modules 114
Monitor
    cleaning 13

connecting external monitor 122
Monitor port 121
Monitor type
external 67
Mouse
connecting 123
does not work 105
external 23
locking 29
port 121
serial 23
Mouse, PS/2 66
MPEG decoder card 41
MPU I/O 74
Multi-Sector Transfers 65

N
Netherlands keyboard 145
Nickel-metal hydride battery 50, 51, 129, 132
NiMH battery 51
Normal video 28, 48
Norwegian keyboard 145
Not write protected 39
Notational conventions 2
Note on the laser 5
Notebook
cleaning 13
configuration 59
preparing for use 16
set up 16
stops working 104
switching off 19
switching on 18
Notes
CD 35
CE certificate 8
disposal 8
energy saving 7
important 3
on Windows 95 19
RFI suppression 8
safety 3
Numeric keypad 24, 26

disable 28
enable 28
NumLK 21, 27

O
On-board IDE Adapter 72
Opening the CD tray by hand 38
Operating
BIOS Setup 61
CD-ROM drive 35
MOD drive 38
Operating system
installing 18
Operation
halting 29
of notebook 15
Optimum battery capacity 11
Options, System startup 67

P
Packing material 15
Pad Num key 26
PadLK 21, 26
Parallel data transfer 71
Parallel port 71, 121
address 71
assignment 140
connecting devices 122
interrupt 71
Parallel Port Mode 71
Parameter, hard disk drive 63
Password
canceling docking password 100
canceling supervisor password 97
canceling user password 99
display 81
forgotten 60, 96
query during system startup 82
setting docking password 99
setting supervisor password 96
setting user password 98
supervisor 81
Supervisor Password 81

user 81
User Password 82
Password on boot 82
Pause key 26
PC card 40
cover 42
installing 41
removing 42
PC card controller
selecting 75
selecting I/O address 76
setting 76
PCI
configuration 75
slot 75
PCI Devices 75
PCI interrupt 77
PCI IRQ line 1,2 77
PCMCIA card 40
cover 42
installing 41
removing 42
PCMCIA Controller Mode 76
PCMCIA Controller Select 75
PCMCIA I/O Address 76
Performance increasing 65
Personal data
protecting 95
Photo-CD (Single- and Multisession) 36
Pinout
ECP mode 141
EPP mode 141
SPP mode 140
PIO 66
Playback
DMA channel 73
interrupt 73
Wave IRQ 73
Plug & Play O/S 79
Plug&Play functionality 79
PM Control 84
Polish keyboard 146
Port 70, 121

assignment 137
cover 120
for external keyboard 137
for external monitor, assignment 139
Game 121
infrared 121
IrDA 121
keyboard 121
loudspeaker 121
microphone 121
MIDI 121
monitor 121
mouse 121
parallel 71, 121
PS/2 mouse 121, 137
serial 121
setting 70
Port Mode
parallel 71
Portuguese keyboard 147
Power adapter
connector 51
is not connected correctly 102
technical data 132
Power consumption
reducing 43
POWER LED 20
does not light up 101
Power management
settings in the system BIOS 84
Power menu 83
Power Savings 84
Power-management feature 43
display 46
hard disk 47
Preparing
notebook for operation 15
notebook for use 16
Preventing
booting operating system 98
unauthorized access to floppy disk drive 96
unauthorized access to MobiDock 96
unauthorized access to notebook 98

unauthorized BIOS Setup calls 95
unauthorized callup of BIOS Setup 96
unauthorized system access 96
write operations to floppy disk 32
write operations to MO disks 39
Printer does not print 107
Processor speed, reducing 43
Program Setup 59
Property protection 95
Protecting
floppy disk drive 32
system 95
unauthorized BIOS Setup calls 95
Protection 95
PS/2 Mouse 66
connecting 123
port 121, 137

Q

Query password during system startup 82
QuickPort Plus Audio 74
QuickPort/QuickPort Plus
connecting 124
connection 121
Quieter 28
Quotation marks 2

R

Raising volume 28, 48
Recovery boot diskette 110
Recovery CD 110
Recycling 8
Reducing
brightness 49
display brightness 29
display contrast 29, 49
power consumption 43
processor speed 43, 86
volume 28, 48
Reflexes on display 103
Removing
additional hard disk drive 35
batteries 55

battery from left compartment 55
battery from right-hand compartment 57
CD 37
CD-ROM drive 35
drive 35
floppy disk drive 30
memory modules 114
PC card 42
PCMCIA card 42
Replacing built-in hard disk 116
Reset Configuration Data 80
Restoring hard disk contents
from CD 110
under Windows 95 110
Resume On Modem Ring 87
Resume Time 87
Resume On Time 87
Return 25
Reverse video 28, 48
RFI suppression 8
Right-hand compartment
inserting battery 56
removing battery 57
Ring modem 87
Russian keyboard 147

S

Safety 3
Save Changes 93
Save Changes & Exit 92
Saving
energy 7
power 7
system state 86
Screen, swing open 18
ScrLK 21
SCSI Controller 89
Second hard disk drive
installing 33
removing 35
Second serial port 71
Second-level cache 78
Sectors/Track

hard disk parameter 64
Security features 81
Security functions
BIOS Setup 95
floppy disk drive write protection 32
under Windows 95 95
Security menu 81, 96
Selecting
field 61
internal/external display 28
menu 61
PC card controller 75
Serial mouse 23
connecting 123
Serial port 121
assignment 138
connecting devices 122
setting 70
Serial 1 70
Serial 2 70
Set up your notebook 16
Set Supervisor Password 81
Set User Password 82
Setting
Boot Options 67
bus width for data transfer 65
controller 70
display brightness 49
display contrast 49
docking password 99
energy saving functions 83
external floppy disk drive 88
external hard disk drives 89
floppy disk drive controller 72
floppy disk drive type 63
infrared interface 71
Long Life mode 43
MobiDock password 90
parallel port mode 71
PC card controller 76
PCI interrupt 77
Plug&Play functionality 79
port 70

SCSI controller 89
serial port 70
supervisor password 96
suspend mode 45
switch-on time 87
system date 62
system functions 59
system settings 62
system time 62
up the security features 81
user password 98
Settings in BIOS Setup 59, 92
Setup 59 see BIOS Setup
Shared IRQ 136
Shift key 25
Shift+Tab 29
Shut down
display 44
hard disk motor 44
Single continuous beep 108
Slave 63
Slot, PCI 75
Slovakian keyboard 148
Soundchip 73
ESS1888 73
Spanish keyboard 148
Speaker 74
Specifications, keyboard layouts 142
Specifying
display device 66
external monitor type 67
hard disk for system load 89
SPP mode
pinout 140
Standby mode 44, 84
off 28
on 28
Standby Timeout 84
Start key 26
Starting BIOS Setup 27, 60
Startup options 67
Status of battery 21
Stop current operation 29

Summary screen 67
Summer time 106
Supervisor password 96
  canceling 97
  changing 96
  setting 96
Supervisor Password 81
  setting 81
Supported formats CD 35
Suspend
  to Disk 45
  to DRAM 45
Suspend mode 45, 85
  for low battery capacity 86
  off 28
  on 28
Suspend Timeout 85
Swedish keyboard 149
Swing open the screen 18
Swiss keyboard 149
Switching
  between internal/external display 28
  display off 27, 46
  display on 27, 46
  notebook on 18
  off display 46
  off the notebook 19
  on at a fixed time 87
  on for modem ring 87
Switch-on time
  setting 87
Symbol
  battery 21
  explanation of 2
System
  load 89
System access
  preventing 96
System Date 62
System expansions 111
System functions, settings 59
System settings 62
  advanced 69

System startup
displaying configuration 67
options 67
password query 82
System state
saving 86
System time 62

T
Tab key 25
Technical data 127, 130
battery 129, 132
car adapter 133
CD-ROM drive 133
Power adapter 132
Three long beeps 108
Time 62
incorrect 106
Timeout 84, 85
Tips 101
Touchpad 23
buttons 23
cleaning 13
does not work 105
enabling 66
locking 29
Transfer mode 65, 66
for the IDE hard disk drive 65, 66
Transferring data with infrared interface 125
Transportation 12
Troubleshooting 101
Turkish keyboard 150
TV card 41
Type, hard disk type 64

U
UK English keyboard 150
Unauthorized access
to MobiDock 96
to notebook
preventing 98
to system 96
Unauthorized BIOS Setup calls 96

preventing 95
Unidirectional, Mode 71
Unpacking 15
Unstable image 104
US English keyboard 151
User password 96
canceling 99
setting 98
User Password 81
setting 82
Using the power-management features 43
Utility diskettes 19
Utilization, external cache 78

V
Video
normal 28
reverse 28
Timeout 85
Video System 67
Video-CD 36
Volume
adjustment 48
increasing 28, 48
reduce 28
reducing 48

W
Warm boot 29
Warning, acoustic 108
Windows 95 19
license number 19
restoring the hard disk contents 110
security functions 95
Winter time 106
Wireless serial data transfer 125
Working with floppy disks 32
Write operations to floppy disk
preventing 32
Write Precomp
hard disk parameter 64
Write protected 32, 39
Write protection

activate 39
deactivate 39
Write protection of floppy disk drive 32

Z

Zoom video port 41