G551 Rev 2.C

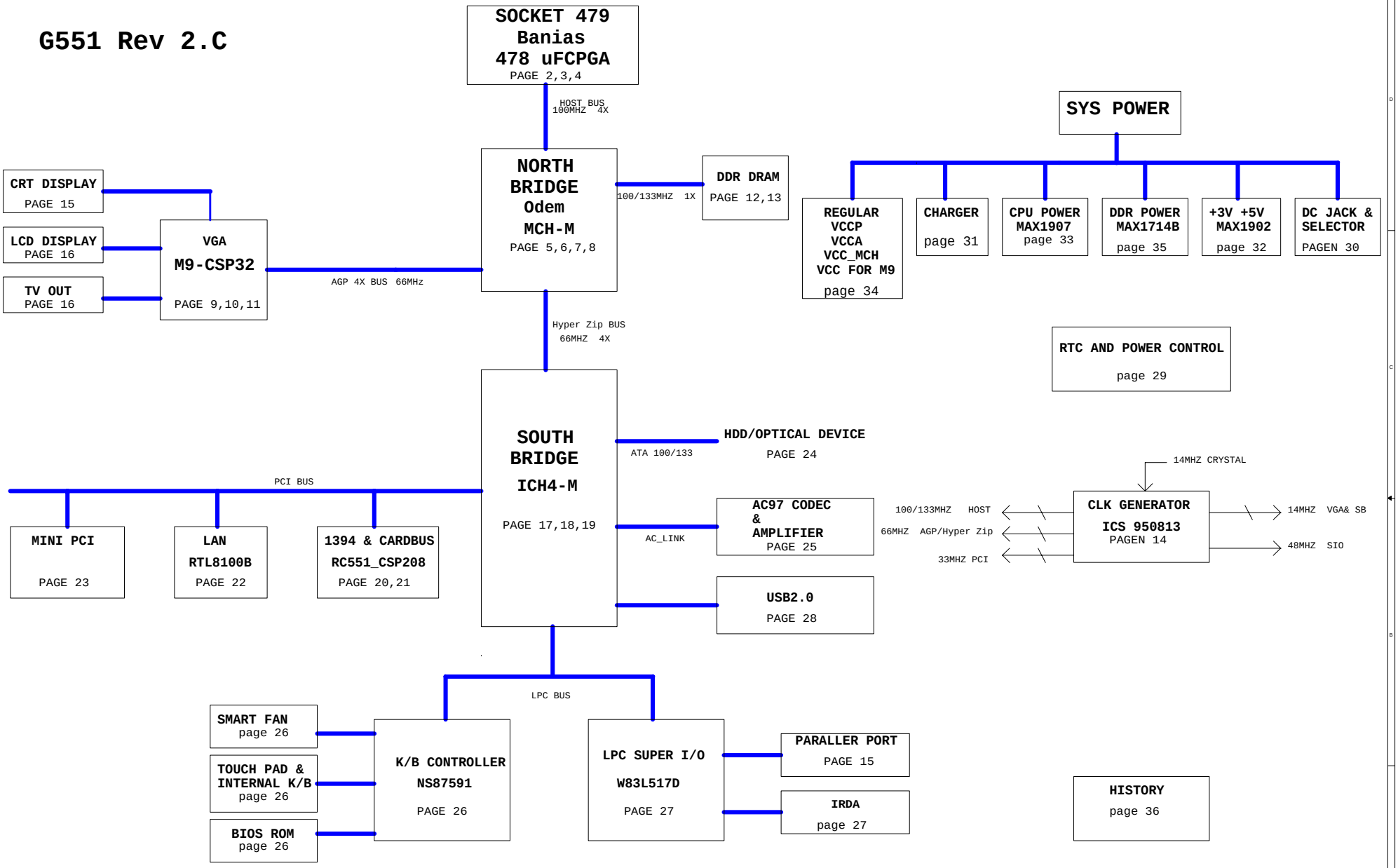

PAGE	1	2	3	4	5	6	7	8	9	10	11	12	13	14	15	16	17	18
REV	2.C	2.0	2.0	2.0	2.0	2.0	2.0	2.0	2.0	2.0	2.0	2.0	2.0	2.0	2.0	2.0	2.0	2.B
DATE	12/23/2003	03/20/2003	03/20/2003	03/20/2003	03/20/2003	03/20/2003	03/20/2003	03/20/2003	03/20/2003	04/25/2003	04/25/2003	03/20/2003	03/20/2003	04/25/2003	04/25/2003	03/20/2003	03/20/2003	04/25/2003

PAGE	19	20	21	22	23	24	25	26	27	28	29	30	31	32	33	34	35	36
REV	2.0	2.A	2.0	2.0	2.0	2.0	2.A	2.0	2.0	2.0	2.0	2.0	2.0	2.0	2.0	2.C	2.0	2.C
DATE	03/20/2003	03/25/2003	04/25/2003	03/20/2003	04/25/2003	03/20/2003	03/20/2003	04/25/2003	03/20/2003	03/20/2003	03/20/2003	03/20/2003	03/20/2003	03/20/2003	03/20/2003	12/23/2003	04/25/2003	12/23/2003

P/N : 15-F31-012000

Approved by	Checked by	Designed by

ECS CORPORATION

P.Leader

Title: G551 M/B

Size: C | Document Number: G551-1-4-01 | Rev: 2C

Date: Wednesday, July 09, 2003 | Sheet 1 of 36

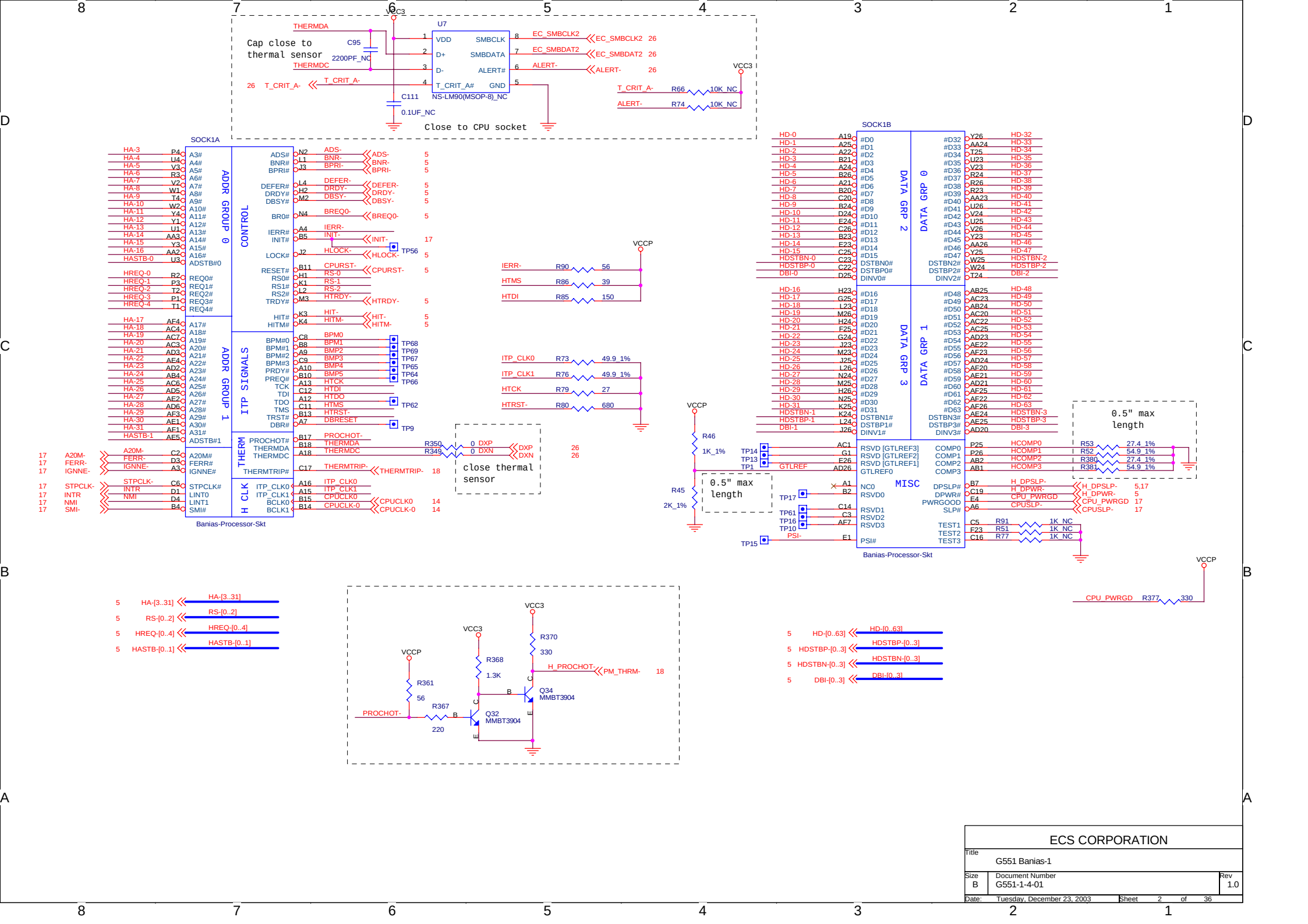
Cap close to thermal sensor
THERMDA
THERMDC
C95
2200PF_NC
C111
0.1UF_NC
U7
VDD
D+
D-
T_CRIT_A#
SMBCLK
SMBDATA
ALERT#
GND
NS-LM90(MSOP-8)_NC
EC_SMBCLK2
EC_SMBDAT2
ALERT-
T_CRIT_A-
R66
R74
10K_NC
Close to CPU socket
SOCK1A
ADDR GROUP 0
ADDR GROUP 1
CONTROL
ITP SIGNALS
THERM
H CLK
Banias-Processor-Skt
SOCK1B
DATA GRP 0
DATA GRP 2
DATA GRP 1
DATA GRP 3
MISC
Banias-Processor-Skt
close thermal sensor
0.5" max length
R46
1K_1%
R45
2K_1%
VCCP
VCC3
CPU_PWRGD
R377
330
HA-[3..31]
RS-[0..2]
HREQ-[0..4]
HASTB-[0..1]
HD-[0..63]
HDSTBP-[0..3]
HDSTBN-[0..3]
DBI-[0..3]
R370
330
R368
1.3K
R361
56
R367
220
Q34
MMBT3904
Q32
MMBT3904
H_PROCHOT-
PM_THRM-
PROCHOT-
ECS CORPORATION
G551 Banias-1
Size B
Document Number G551-1-4-01
Rev 1.0
Date: Tuesday, December 23, 2003
Sheet 2 of 36

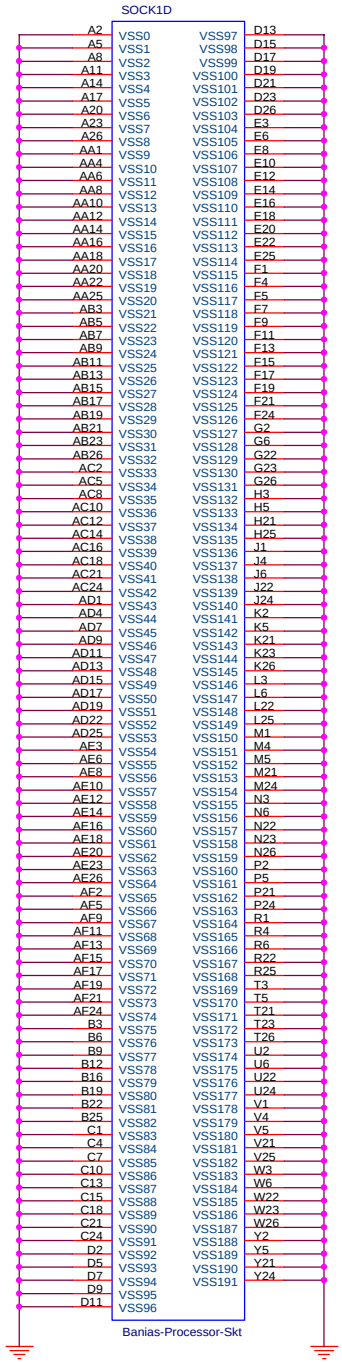

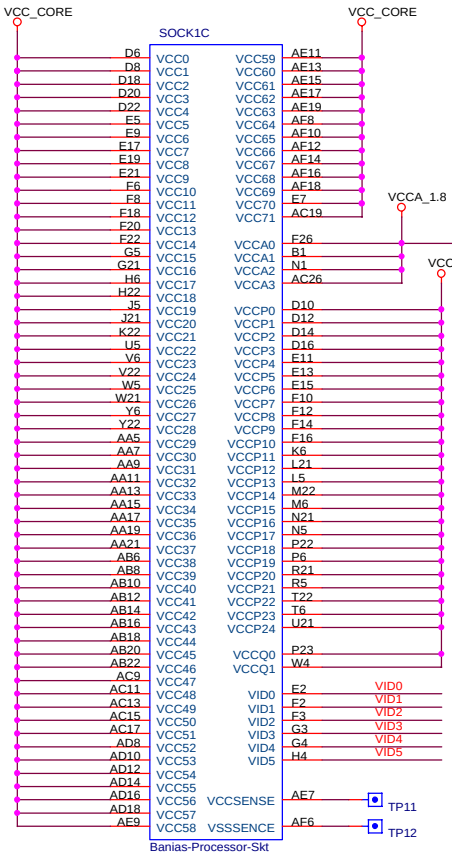

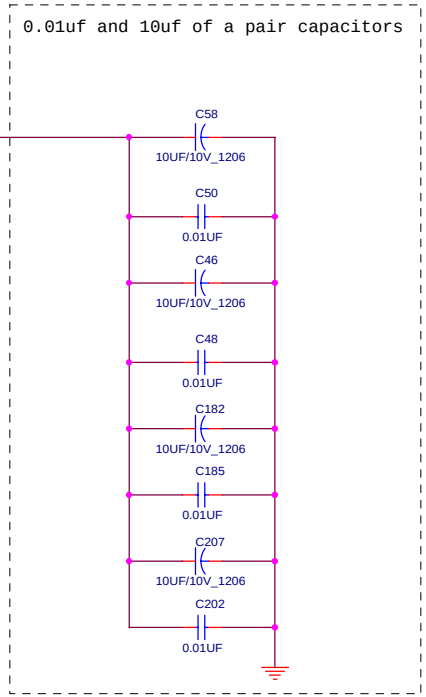

33 VID[0..5] VID[0..5]

LAYOUT NOTE: Provide a test point (with no stub) to connent differential probe between VCCSENSE and VSSSENSE at the location where the two 54.9 ohm resistors terminate the 55 ohm tranmisssion lines.

ECS CORPORATION		
Title: G551 Banias-2		
Size: B	Document Number: G551-1-4-01	Rev: 1.0
Date: Tuesday, December 23, 2003	Sheet 3 of 36	

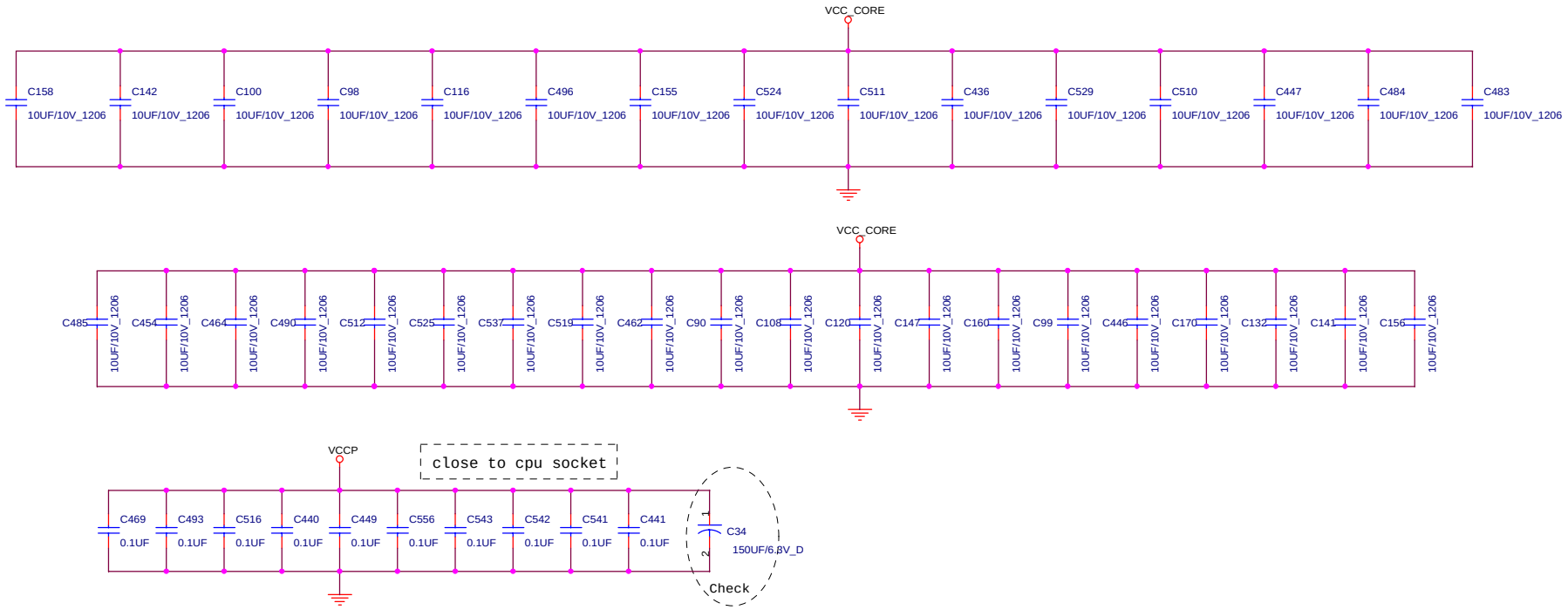

ECS CORPORATION		
Title: G551 Banias-3		
Size: B	Document Number: G551-1-4-01	Rev: 1.0
Date: Tuesday, December 23, 2003	Sheet 4 of 36	

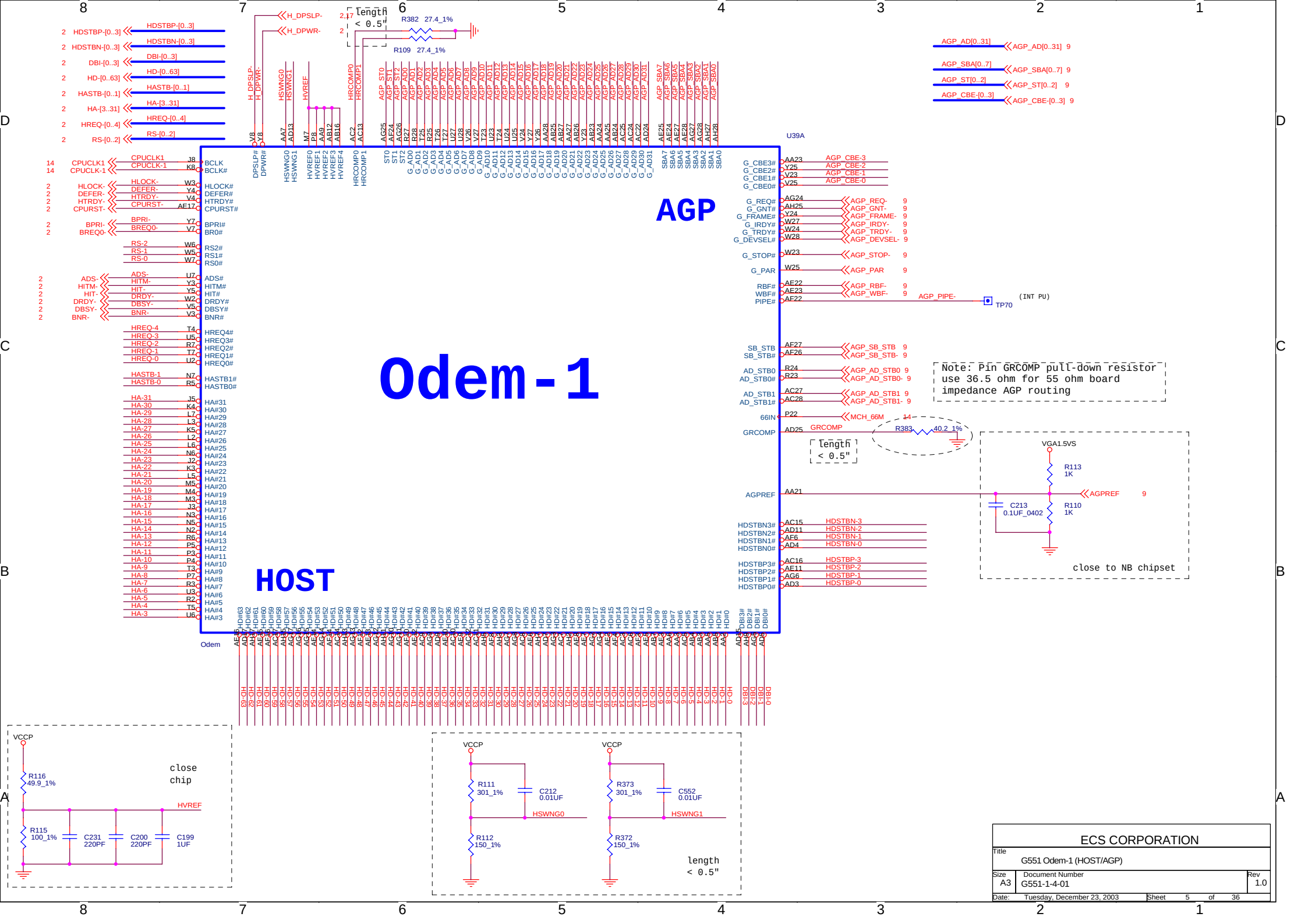
Odem-1
HOST
AGP
U39A
Odem
Note: Pin GRCOMP pull-down resistor use 36.5 ohm for 55 ohm board impedance AGP routing
close to NB chipset
close chip
length < 0.5"
ECS CORPORATION
Title
G551 Odem-1 (HOST/AGP)
Size A3
Document Number G551-1-4-01
Rev 1.0
Date: Tuesday, December 23, 2003
Sheet 5 of 36

Resistors place close to DIMM

Odem-2 DDR

/RMD[0..63] /RMD[0..63] 12,13
/RDQS[0..7] /RDQS[0..7] 12,13
/RCS-[0..3] /RCS-[0..3] 12,13
CKE[0..3] CKE[0..3] 12,13

M_A[0..12] M_A[0..12] 12,13
M_CLK[0..5] M_CLK[0..5] 12
M_CLK-[0..5] M_CLK-[0..5] 12

RP17 MD3 MD2 MD1 MD0 /RMD3 /RMD2 /RMD1 /RMD0 10X4_0402
RP43 MD4 MD5 MD6 MD7 /RMD4 /RMD5 /RMD6 /RMD7 10X4_0402
RP16 MD11 MD10 MD9 MD8 /RMD11 /RMD10 /RMD9 /RMD8 10X4_0402
RP42 MD12 MD13 MD14 MD15 /RMD12 /RMD13 /RMD14 /RMD15 10X4_0402
RP15 MD19 MD18 MD17 MD16 /RMD19 /RMD18 /RMD17 /RMD16 10X4_0402
RP41 MD20 MD21 MD22 MD23 /RMD20 /RMD21 /RMD22 /RMD23 10X4_0402
RP14 MD27 MD26 MD25 MD24 /RMD27 /RMD26 /RMD25 /RMD24 10X4_0402
RP40 MD28 MD29 MD30 MD31 /RMD28 /RMD29 /RMD30 /RMD31 10X4_0402
RP13 MD35 MD34 MD33 MD32 /RMD35 /RMD34 /RMD33 /RMD32 10X4_0402
RP39 MD36 MD37 MD38 MD39 /RMD36 /RMD37 /RMD38 /RMD39 10X4_0402
RP12 MD43 MD42 MD41 MD40 /RMD43 /RMD42 /RMD41 /RMD40 10X4_0402
RP38 MD44 MD45 MD46 MD47 /RMD44 /RMD45 /RMD46 /RMD47 10X4_0402
RP11 MD51 MD50 MD49 MD48 /RMD51 /RMD50 /RMD49 /RMD48 10X4_0402
RP37 MD52 MD53 MD54 MD55 /RMD52 /RMD53 /RMD54 /RMD55 10X4_0402
RP10 MD59 MD58 MD57 MD56 /RMD59 /RMD58 /RMD57 /RMD56 10X4_0402
RP36 MD60 MD61 MD62 MD63 /RMD60 /RMD61 /RMD62 /RMD63 10X4_0402

/RDQS0 R173 10_1%_0402 M_DQS0
/RDQS1 R172 10_1%_0402 M_DQS1
/RDQS2 R171 10_1%_0402 M_DQS2
/RDQS3 R170 10_1%_0402 M_DQS3
/RDQS4 R169 10_1%_0402 M_DQS4
/RDQS5 R168 10_1%_0402 M_DQS5
/RDQS6 R167 10_1%_0402 M_DQS6
/RDQS7 R166 10_1%_0402 M_DQS7

U39B

MD0 G28 SDQ0
MD1 F27 SDQ1
MD2 C28 SDQ2
MD3 E28 SDQ3
MD4 H25 SDQ4
MD5 G27 SDQ5
MD6 F25 SDQ6
MD7 B28 SDQ7
MD8 E27 SDQ8
MD9 C27 SDQ9
MD10 B25 SDQ10
MD11 C25 SDQ11
MD12 B27 SDQ12
MD13 D27 SDQ13
MD14 D26 SDQ14
MD15 E25 SDQ15
MD16 D24 SDQ16
MD17 E23 SDQ17
MD18 C22 SDQ18
MD19 E21 SDQ19
MD20 C24 SDQ20
MD21 B23 SDQ21
MD22 D22 SDQ22
MD23 B21 SDQ23
MD24 C21 SDQ24
MD25 D20 SDQ25
MD26 C19 SDQ26
MD27 D18 SDQ27
MD28 C20 SDQ28
MD29 E19 SDQ29
MD30 C18 SDQ30
MD31 E17 SDQ31
MD32 E13 SDQ32
MD33 C12 SDQ33
MD34 B11 SDQ34
MD35 C10 SDQ35
MD36 B13 SDQ36
MD37 C13 SDQ37
MD38 C11 SDQ38
MD39 D10 SDQ39
MD40 E10 SDQ40
MD41 C9 SDQ41
MD42 D8 SDQ42
MD43 E8 SDQ43
MD44 E11 SDQ44
MD45 B9 SDQ45
MD46 B7 SDQ46
MD47 C7 SDQ47
MD48 C6 SDQ48
MD49 D6 SDQ49
MD50 D4 SDQ50
MD51 B3 SDQ51
MD52 E6 SDQ52
MD53 B5 SDQ53
MD54 C4 SDQ54
MD55 E4 SDQ55
MD56 C3 SDQ56
MD57 D3 SDQ57
MD58 F4 SDQ58
MD59 F3 SDQ59
MD60 B2 SDQ60
MD61 C2 SDQ61
MD62 E2 SDQ62
MD63 G4 SDQ63
C16 SDQ64
D16 SDQ65
B15 SDQ66
C14 SDQ67
B17 SDQ68
C17 SDQ69
C15 SDQ70
D14 SDQ71

M_DQS0 F26 SDQS0
M_DQS1 C26 SDQS1
M_DQS2 C23 SDQS2
M_DQS3 B19 SDQS3
M_DQS4 D12 SDQS4
M_DQS5 C8 SDQS5
M_DQS6 C5 SDQS6
M_DQS7 E3 SDQS7
E15 SDQS8

TP94 TP90 TP93 TP88 TP87 TP91 TP86 TP92 TP89

SMA0 E12 M_A0
SMA1 F17 M_A1
SMA2 E16 M_A2
SMA3 G17 M_A3
SMA4 G18 M_A4
SMA5 E18 M_A5
SMA6 F19 M_A6
SMA7 G20 M_A7
SMA8 G19 M_A8
SMA9 F21 M_A9
SMA10 E13 M_A10
SMA11 E20 M_A11
SMA12 G21 M_A12

SRAS# F11 M_RAS- M_RAS- 12,13
SCAS# G8 M_CAS- M_CAS- 12,13
SWE# G11 M_WE- M_WE- 12,13

SCS0# E9 /RCS-0
SCS1# F7 /RCS-1
SCS2# F9 /RCS-2
SCS3# E7 /RCS-3

SBS0 G12 M_BS0 M_BS0 12,13
SBS1 G13 M_BS1 M_BS1 12,13

SCKE0 G23 CKE0
SCKE1 E22 CKE1
SCKE2 H23 CKE2
SCKE3 F23 CKE3

SCK0 J25 M_CLK0
SCK1 G5 M_CLK1
SCK2 G24 M_CLK2
SCK3 G25 M_CLK3
SCK4 G6 M_CLK4
SCK5 K23 M_CLK5

SCK#0 K25 M_CLK-0
SCK#1 F5 M_CLK-1
SCK#2 E24 M_CLK-2
SCK#3 J24 M_CLK-3
SCK#4 G7 M_CLK-4
SCK#5 J23 M_CLK-5

RCVENOUT# G14 M_RCV-
RCVENIN G15
SMRCOMP J28 SMRCOMP

DDR_VTT
R409 30.1_1%
< 1" to chip
C602 0.1UF

SMVREF0 J9
SMVREF1 J21 SMVREF0

VCC_DIMM
R411 1K_1%
R410 1K_1%
C254 0.1UF
C255 1000PF
C597 1000PF
AS CLOSE AS POSSIBLE TO NB chipset

Odem

ECS CORPORATION		
Title: G551 Odem-2 (RAM CONTROLLER)		
Size: A3	Document Number: G551-1-4-01	Rev: 1.0
Date: Tuesday, December 23, 2003	Sheet 6 of 36	

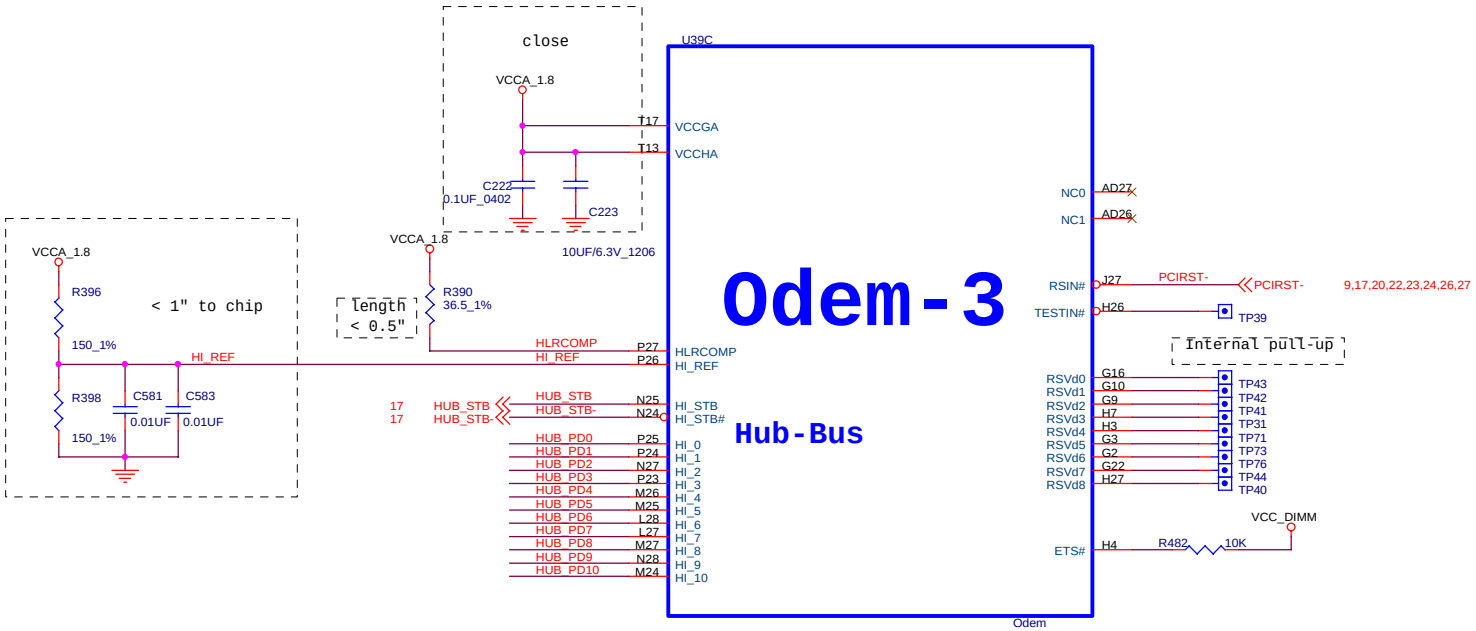

ECS CORPORATION		
Title: G551 Odem-3 (HYPERZIP/VGA)		
Size: B	Document Number: G551-1-4-01	Rev: 1.0
Date: Tuesday, December 23, 2003	Sheet 7 of 36	

Odem-4 Power/Gnd

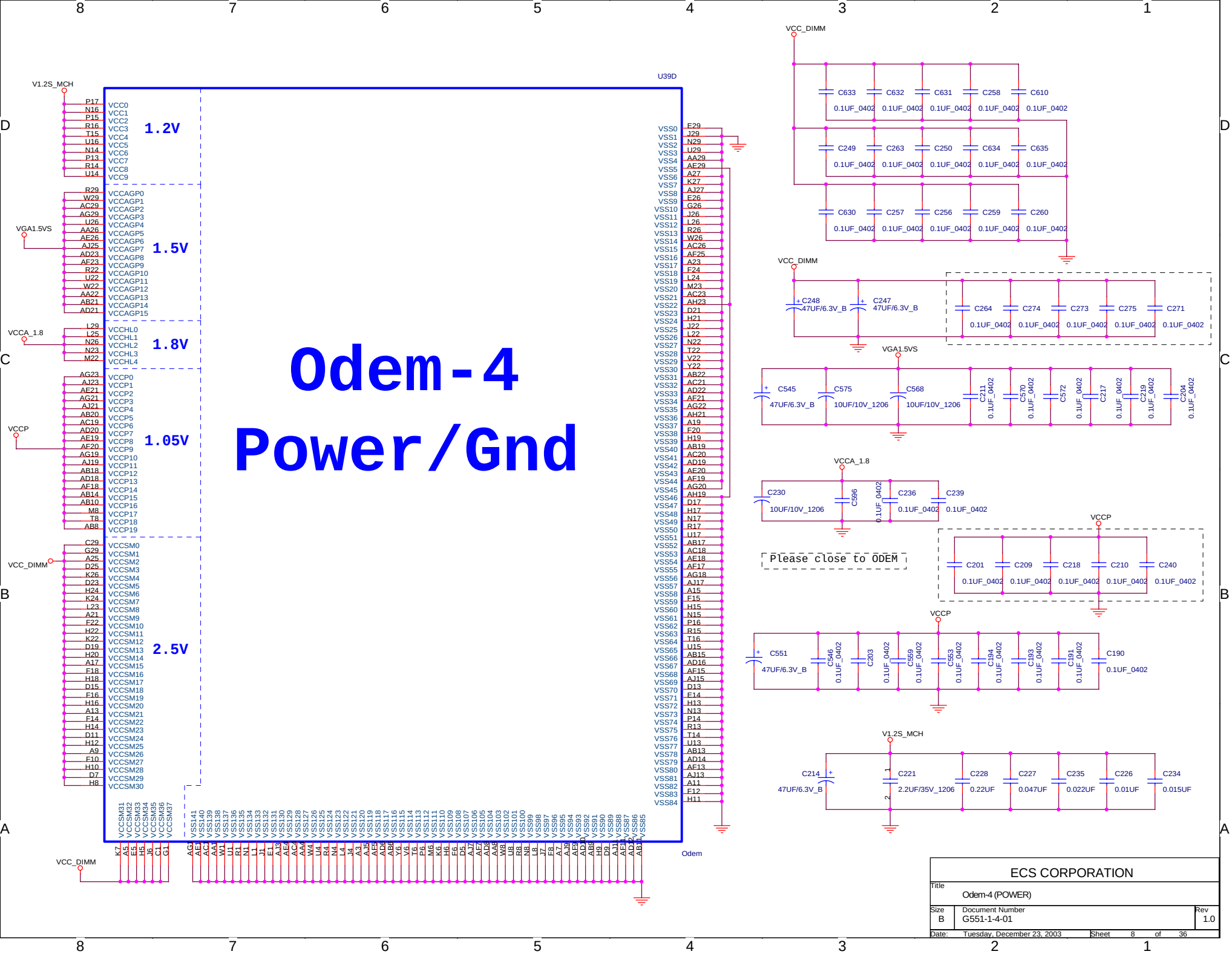

ECS CORPORATION	
Title	Odem-4 (POWER)
Size: B	Document Number: G551-1-4-01 — Rev: 1.0
Date: Tuesday, December 23, 2003	Sheet 8 of 36

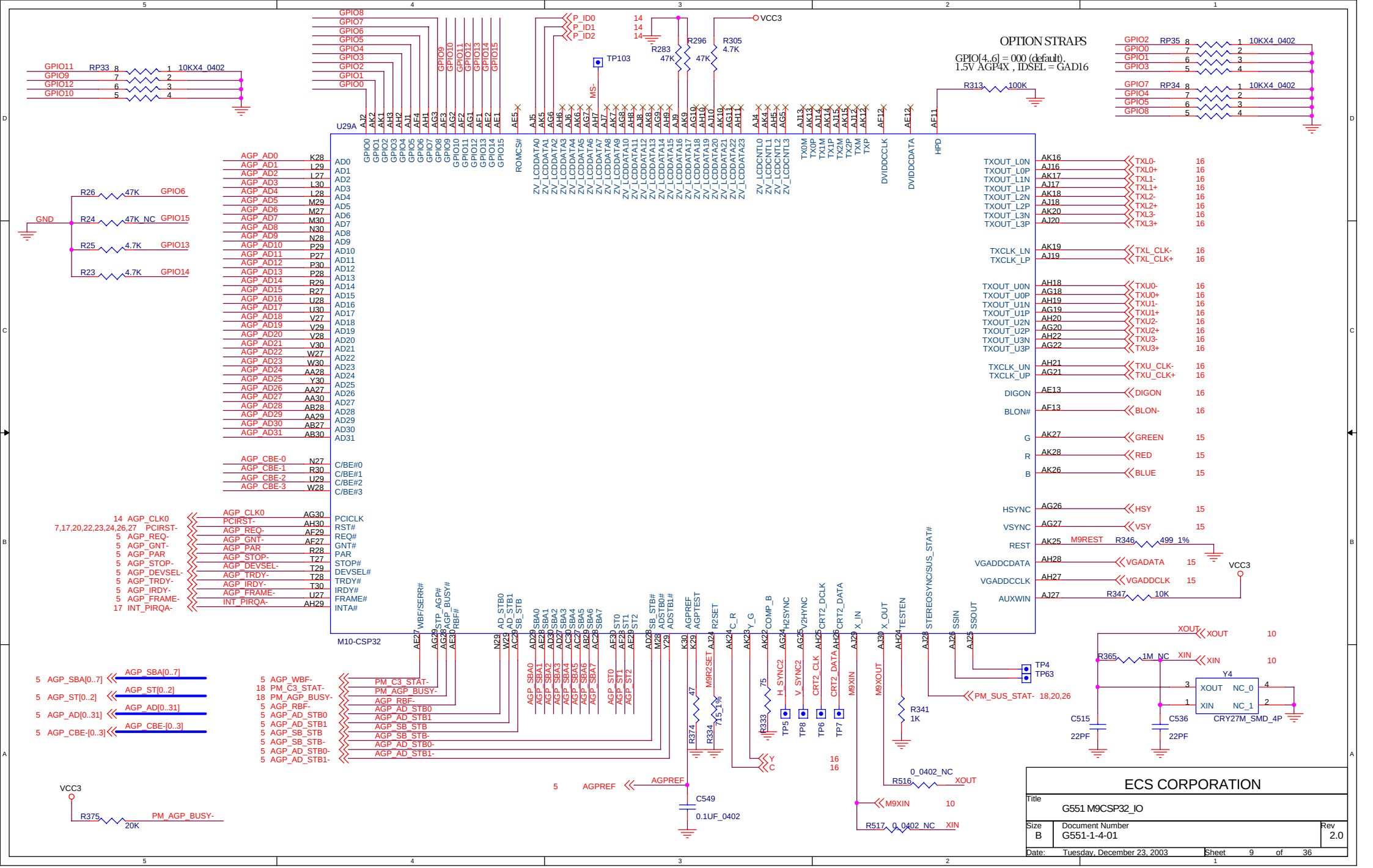
OPTION STRAPS
GPIO[4..6] = 000 (default).
1.5V AGP4X , IDSEL = GAD16
U29A
M10-CSP32
VCC3
R313 100K
R296 47K
R283 47K
R305 4.7K
TP103
R26 47K GPIO6
R24 47K_NC GPIO15
R25 4.7K GPIO13
R23 4.7K GPIO14
GND
RP33 10KX4_0402
RP35 10KX4_0402
RP34 10KX4_0402
AGP_AD0
AGP_AD1
AGP_AD2
AGP_AD3
AGP_AD4
AGP_AD5
AGP_AD6
AGP_AD7
AGP_AD8
AGP_AD9
AGP_AD10
AGP_AD11
AGP_AD12
AGP_AD13
AGP_AD14
AGP_AD15
AGP_AD16
AGP_AD17
AGP_AD18
AGP_AD19
AGP_AD20
AGP_AD21
AGP_AD22
AGP_AD23
AGP_AD24
AGP_AD25
AGP_AD26
AGP_AD27
AGP_AD28
AGP_AD29
AGP_AD30
AGP_AD31
AGP_CBE-0
AGP_CBE-1
AGP_CBE-2
AGP_CBE-3
AGP_CLK0
PCIRST-
AGP_REQ-
AGP_GNT-
AGP_PAR
AGP_STOP-
AGP_DEVSEL-
AGP_TRDY-
AGP_IRDY-
AGP_FRAME-
INT_PIRQA-
TXOUT_L0N
TXOUT_L0P
TXOUT_L1N
TXOUT_L1P
TXOUT_L2N
TXOUT_L2P
TXOUT_L3N
TXOUT_L3P
TXCLK_LN
TXCLK_LP
TXOUT_U0N
TXOUT_U0P
TXOUT_U1N
TXOUT_U1P
TXOUT_U2N
TXOUT_U2P
TXOUT_U3N
TXOUT_U3P
TXCLK_UN
TXCLK_UP
DIGON
BLON#
G
R
B
HSYNC
VSYNC
REST
VGADDCDATA
VGADDCCLK
AUXWIN
M9REST R346 499 1%
R347 10K
TP4
TP63
PM_SUS_STAT- 18,20,26
R341 1K
R516 0_0402_NC
R517 0_0402_NC
M9XIN
M9XOUT
R375 20K
PM_AGP_BUSY-
C549 0.1UF_0402
AGPREF
C515 22PF
C536 22PF
Y4 CRY27M_SMD_4P
R365 1M_NC
R333 75
R334 715_1%
R374 47
TP5
TP8
TP6
TP7
H_SYNC2
V_SYNC2
CRT2_CLK
CRT2_DATA
M9R2SET
AGP_SBA[0..7]
AGP_ST[0..2]
AGP_AD[0..31]
AGP_CBE-[0..3]
PM_C3_STAT-
PM_AGP_BUSY-
AGP_RBF-
AGP_AD_STB0
AGP_AD_STB1
AGP_SB_STB
AGP_SB_STB-
AGP_AD_STB0-
AGP_AD_STB1-
ECS CORPORATION
Title
G551 M9CSP32_IO
Size B
Document Number G551-1-4-01
Rev 2.0
Date: Tuesday, December 23, 2003
Sheet 9 of 36

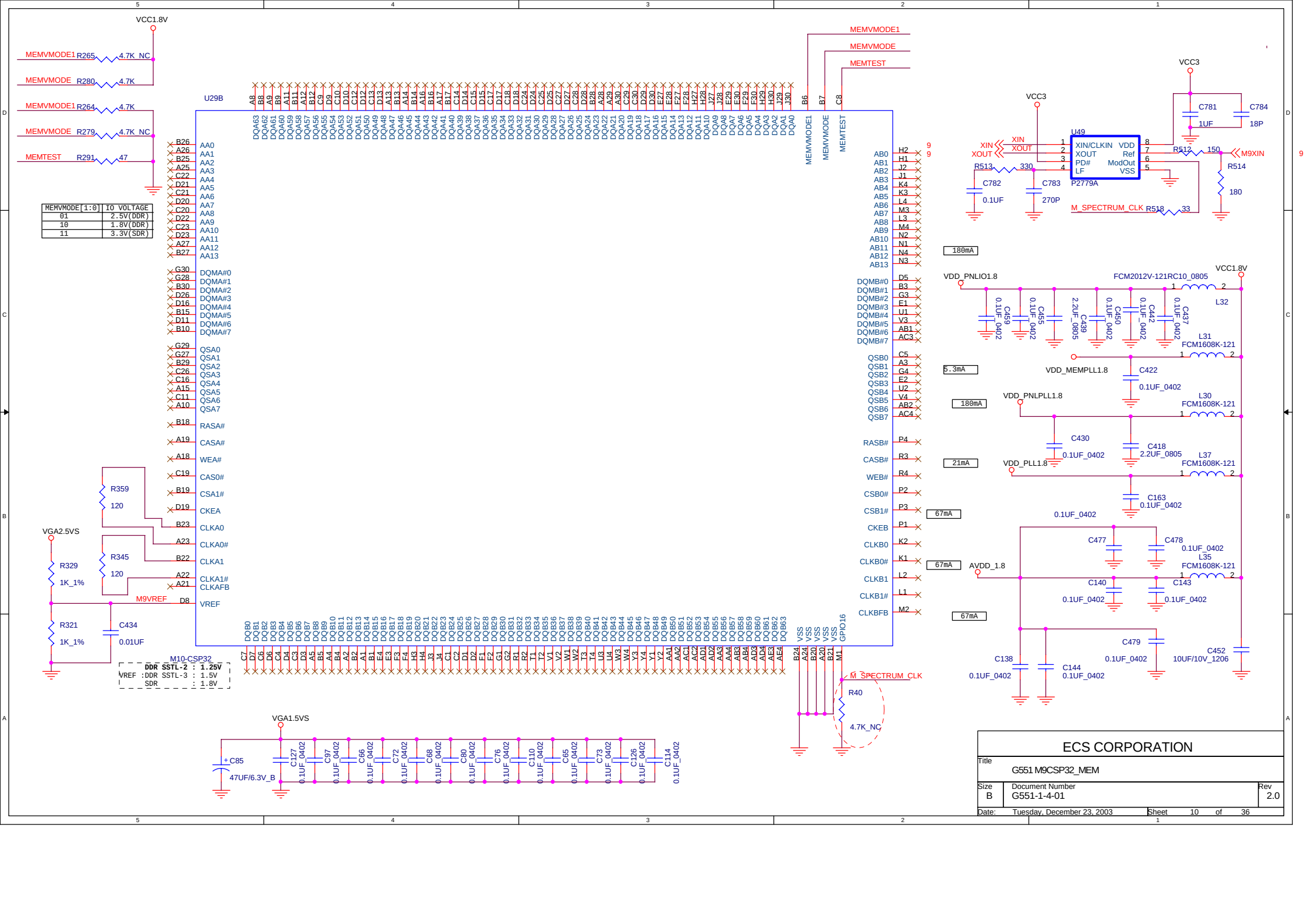
VCC1.8V
MEMVMODE1 R265 4.7K_NC
MEMVMODE R280 4.7K
MEMVMODE1 R264 4.7K
MEMVMODE R279 4.7K_NC
MEMTEST R291 47
MEMVMODE[1:0] | IO VOLTAGE
01 | 2.5V(DDR)
10 | 1.8V(DDR)
11 | 3.3V(SDR)
U29B
MEMVMODE1
MEMVMODE
MEMTEST
R359 120
R345 120
R329 1K_1%
R321 1K_1%
VGA2.5VS
M9VREF
C434 0.01UF
M10-CSP32
DDR SSTL-2 : 1.25V
VREF :DDR SSTL-3 : 1.5V
SDR : 1.8V
VGA1.5VS
C85 47UF/6.3V_B
M_SPECTRUM_CLK
R40 4.7K_NC
VCC3
U49
XIN/CLKIN VDD
XOUT Ref
PD# ModOut
LF VSS
P2779A
C781 1UF
C784 18P
R512 150
M9XIN
R514 180
R513 330
C782 0.1UF
C783 270P
M_SPECTRUM_CLK R518 33
180mA
5.3mA
21mA
67mA
VDD_PNLIO1.8
FCM2012V-121RC10_0805
L32
VCC1.8V
VDD_MEMPLL1.8
L31 FCM1608K-121
C422 0.1UF_0402
VDD_PNLPLL1.8
L30 FCM1608K-121
C430 0.1UF_0402
C418 2.2UF_0805
VDD_PLL1.8
L37 FCM1608K-121
C163 0.1UF_0402
AVDD_1.8
L35 FCM1608K-121
C477 C478 C140 C143
C138 C144 C479 C452 10UF/10V_1206
ECS CORPORATION
Title G551 M9CSP32_MEM
Size B
Document Number G551-1-4-01
Rev 2.0
Date: Tuesday, December 23, 2003
Sheet 10 of 36

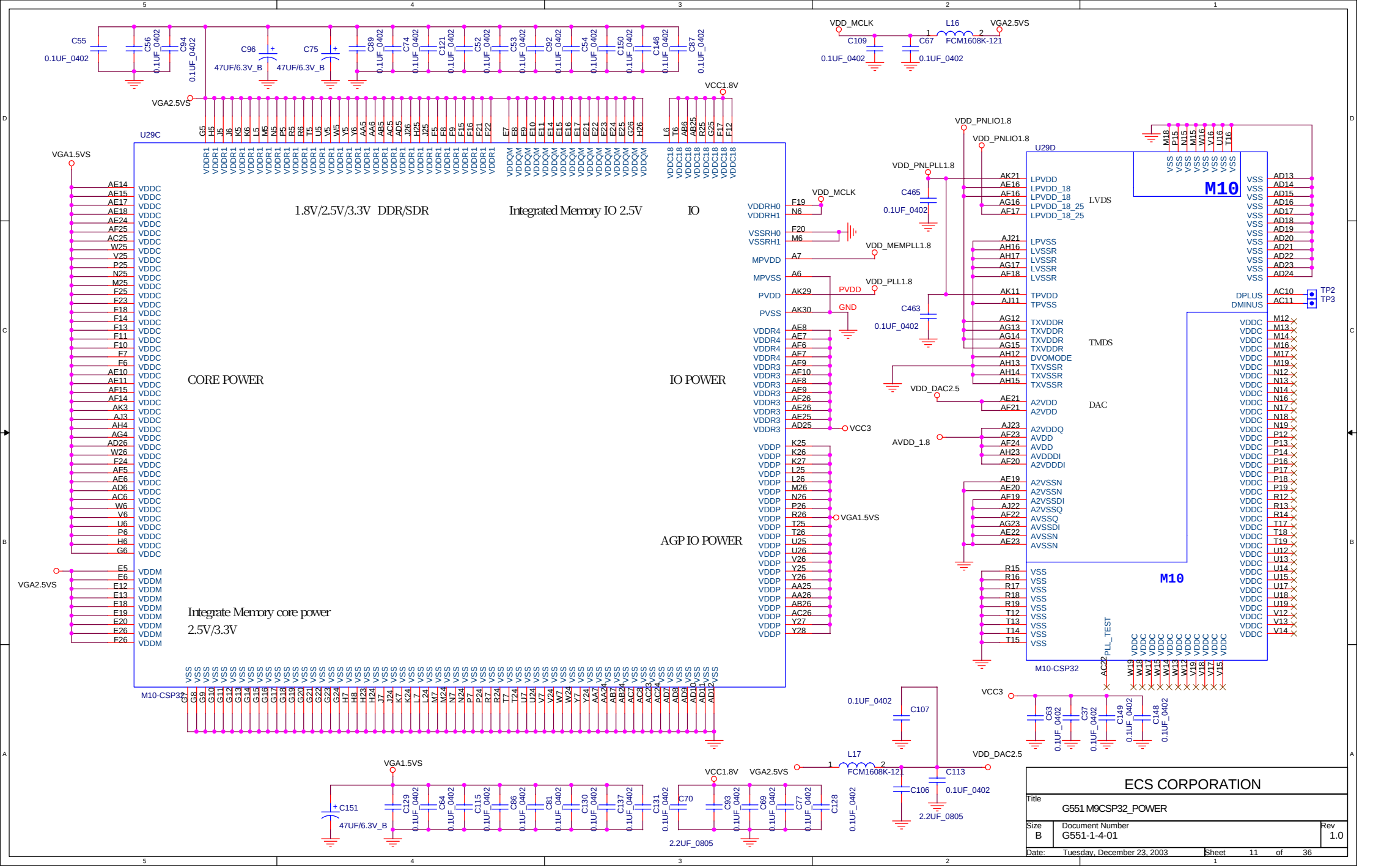

ECS CORPORATION

Title	G551 M9CSP32_POWER	
Size: B	Document Number: G551-1-4-01	Rev: 1.0
Date: Tuesday, December 23, 2003	Sheet 11 of 36	

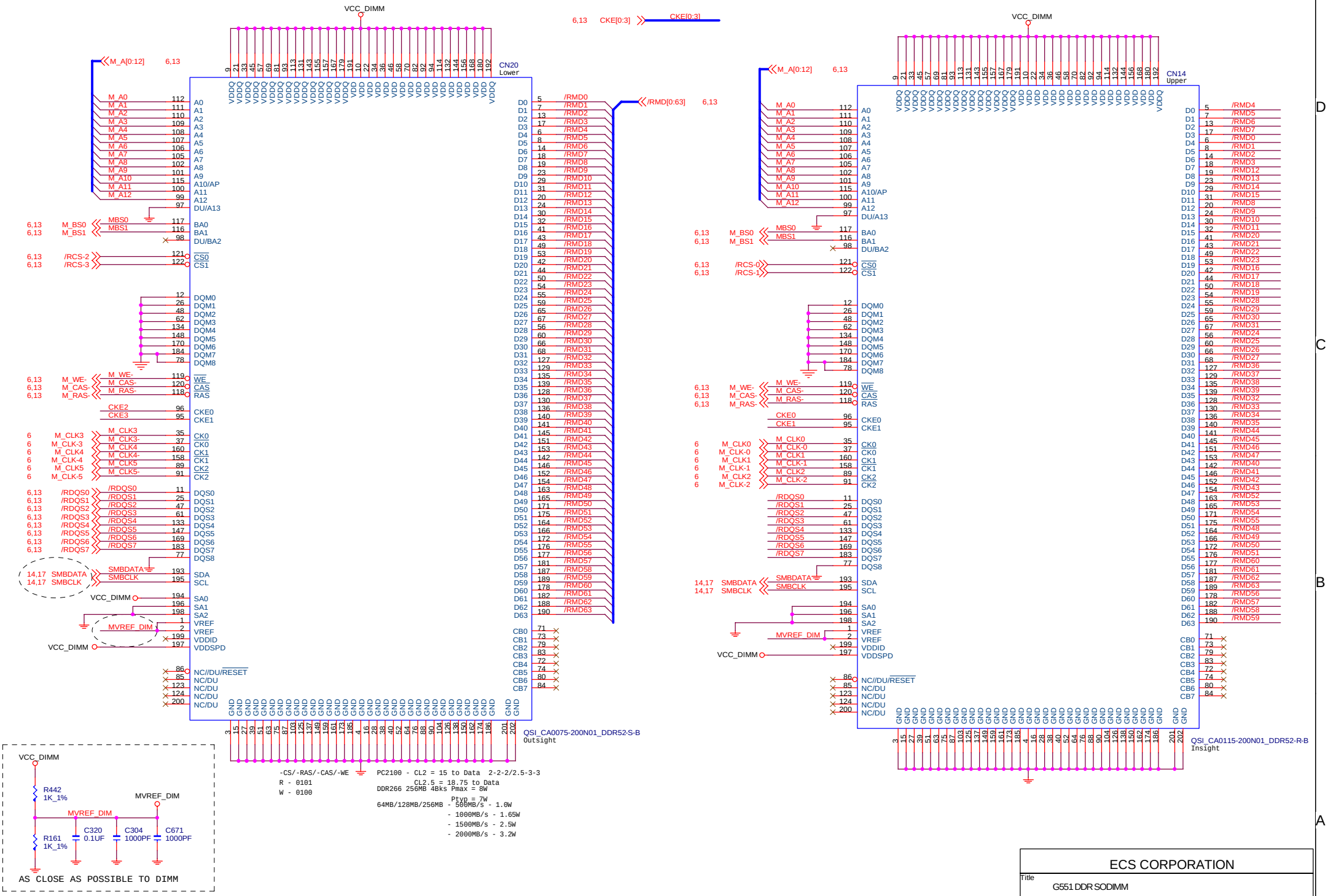

Title	G551 DDR SODIMM
Size	A3
Document Number	G551-1-4-01
Rev	1.0
Date:	Tuesday, December 23, 2003
Sheet	12 of 36

ECS CORPORATION

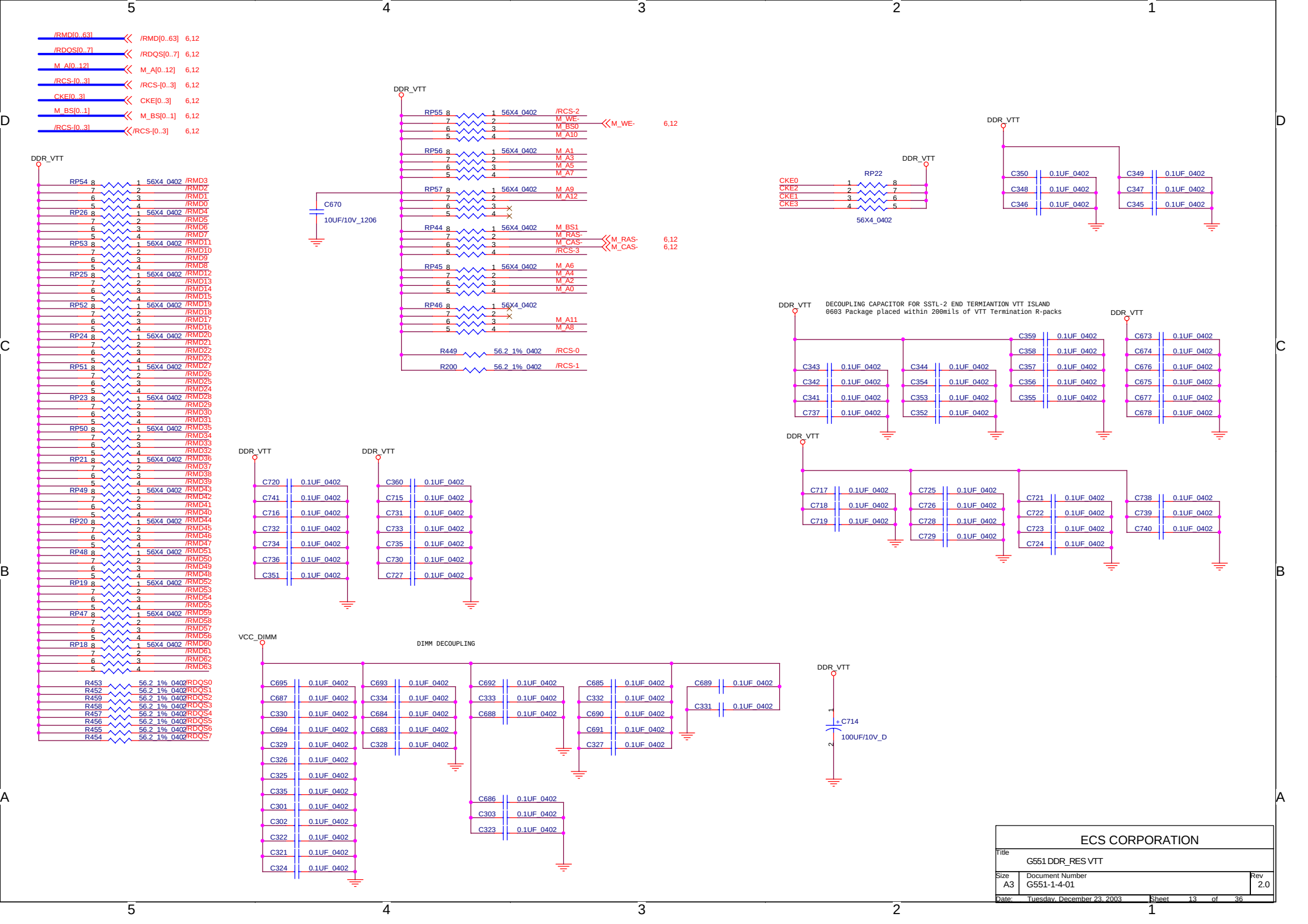
/RMD[0..63] /RMD[0..63] 6,12
/RDQS[0..7] /RDQS[0..7] 6,12
M_A[0..12] M_A[0..12] 6,12
/RCS-[0..3] /RCS-[0..3] 6,12
CKE[0..3] CKE[0..3] 6,12
M_BS[0..1] M_BS[0..1] 6,12
/RCS-[0..3] /RCS-[0..3] 6,12
DDR_VTT
RP54 56X4_0402 /RMD3 /RMD2 /RMD1 /RMD0
RP26 56X4_0402 /RMD4 /RMD5 /RMD6 /RMD7
RP53 56X4_0402 /RMD11 /RMD10 /RMD9 /RMD8
RP25 56X4_0402 /RMD12 /RMD13 /RMD14 /RMD15
RP52 56X4_0402 /RMD19 /RMD18 /RMD17 /RMD16
RP24 56X4_0402 /RMD20 /RMD21 /RMD22 /RMD23
RP51 56X4_0402 /RMD27 /RMD26 /RMD25 /RMD24
RP23 56X4_0402 /RMD28 /RMD29 /RMD30 /RMD31
RP50 56X4_0402 /RMD35 /RMD34 /RMD33 /RMD32
RP21 56X4_0402 /RMD36 /RMD37 /RMD38 /RMD39
RP49 56X4_0402 /RMD43 /RMD42 /RMD41 /RMD40
RP20 56X4_0402 /RMD44 /RMD45 /RMD46 /RMD47
RP48 56X4_0402 /RMD51 /RMD50 /RMD49 /RMD48
RP19 56X4_0402 /RMD52 /RMD53 /RMD54 /RMD55
RP47 56X4_0402 /RMD59 /RMD58 /RMD57 /RMD56
RP18 56X4_0402 /RMD60 /RMD61 /RMD62 /RMD63
R453 56.2_1%_0402 /RDQS0
R452 56.2_1%_0402 /RDQS1
R459 56.2_1%_0402 /RDQS2
R458 56.2_1%_0402 /RDQS3
R457 56.2_1%_0402 /RDQS4
R456 56.2_1%_0402 /RDQS5
R455 56.2_1%_0402 /RDQS6
R454 56.2_1%_0402 /RDQS7
DDR_VTT
C670
10UF/10V_1206
RP55 56X4_0402 /RCS-2 M_WE- M_BS0 M_A10 M_WE- 6,12
RP56 56X4_0402 M_A1 M_A3 M_A5 M_A7
RP57 56X4_0402 M_A9 M_A12
RP44 56X4_0402 M_BS1 M_RAS- M_CAS- /RCS-3 M_RAS- 6,12 M_CAS- 6,12
RP45 56X4_0402 M_A6 M_A4 M_A2 M_A0
RP46 56X4_0402 M_A11 M_A8
R449 56.2_1%_0402 /RCS-0
R200 56.2_1%_0402 /RCS-1
DDR_VTT
RP22
CKE0 CKE2 CKE1 CKE3
56X4_0402
DDR_VTT
C350 0.1UF_0402
C348 0.1UF_0402
C346 0.1UF_0402
C349 0.1UF_0402
C347 0.1UF_0402
C345 0.1UF_0402
DDR_VTT
DECOUPLING CAPACITOR FOR SSTL-2 END TERMIANTION VTT ISLAND
0603 Package placed within 200mils of VTT Termination R-packs
C343 0.1UF_0402
C342 0.1UF_0402
C341 0.1UF_0402
C737 0.1UF_0402
C344 0.1UF_0402
C354 0.1UF_0402
C353 0.1UF_0402
C352 0.1UF_0402
C359 0.1UF_0402
C358 0.1UF_0402
C357 0.1UF_0402
C356 0.1UF_0402
C355 0.1UF_0402
DDR_VTT
C673 0.1UF_0402
C674 0.1UF_0402
C676 0.1UF_0402
C675 0.1UF_0402
C677 0.1UF_0402
C678 0.1UF_0402
DDR_VTT
C720 0.1UF_0402
C741 0.1UF_0402
C716 0.1UF_0402
C732 0.1UF_0402
C734 0.1UF_0402
C736 0.1UF_0402
C351 0.1UF_0402
DDR_VTT
C360 0.1UF_0402
C715 0.1UF_0402
C731 0.1UF_0402
C733 0.1UF_0402
C735 0.1UF_0402
C730 0.1UF_0402
C727 0.1UF_0402
DDR_VTT
C717 0.1UF_0402
C718 0.1UF_0402
C719 0.1UF_0402
C725 0.1UF_0402
C726 0.1UF_0402
C728 0.1UF_0402
C729 0.1UF_0402
C721 0.1UF_0402
C722 0.1UF_0402
C723 0.1UF_0402
C724 0.1UF_0402
C738 0.1UF_0402
C739 0.1UF_0402
C740 0.1UF_0402
VCC_DIMM
DIMM DECOUPLING
C695 0.1UF_0402
C687 0.1UF_0402
C330 0.1UF_0402
C694 0.1UF_0402
C329 0.1UF_0402
C326 0.1UF_0402
C325 0.1UF_0402
C335 0.1UF_0402
C301 0.1UF_0402
C302 0.1UF_0402
C322 0.1UF_0402
C321 0.1UF_0402
C324 0.1UF_0402
C693 0.1UF_0402
C334 0.1UF_0402
C684 0.1UF_0402
C683 0.1UF_0402
C328 0.1UF_0402
C692 0.1UF_0402
C333 0.1UF_0402
C688 0.1UF_0402
C686 0.1UF_0402
C303 0.1UF_0402
C323 0.1UF_0402
C685 0.1UF_0402
C332 0.1UF_0402
C690 0.1UF_0402
C691 0.1UF_0402
C327 0.1UF_0402
C689 0.1UF_0402
C331 0.1UF_0402
DDR_VTT
C714
100UF/10V_D
ECS CORPORATION
Title
G551 DDR_RES VTT
Size A3
Document Number G551-1-4-01
Rev 2.0
Date: Tuesday, December 23, 2003
Sheet 13 of 36

Main Clock Generator

(3 OPTIONS)
1: (ICS)
2: (Cypress)
3. (Hitachi)

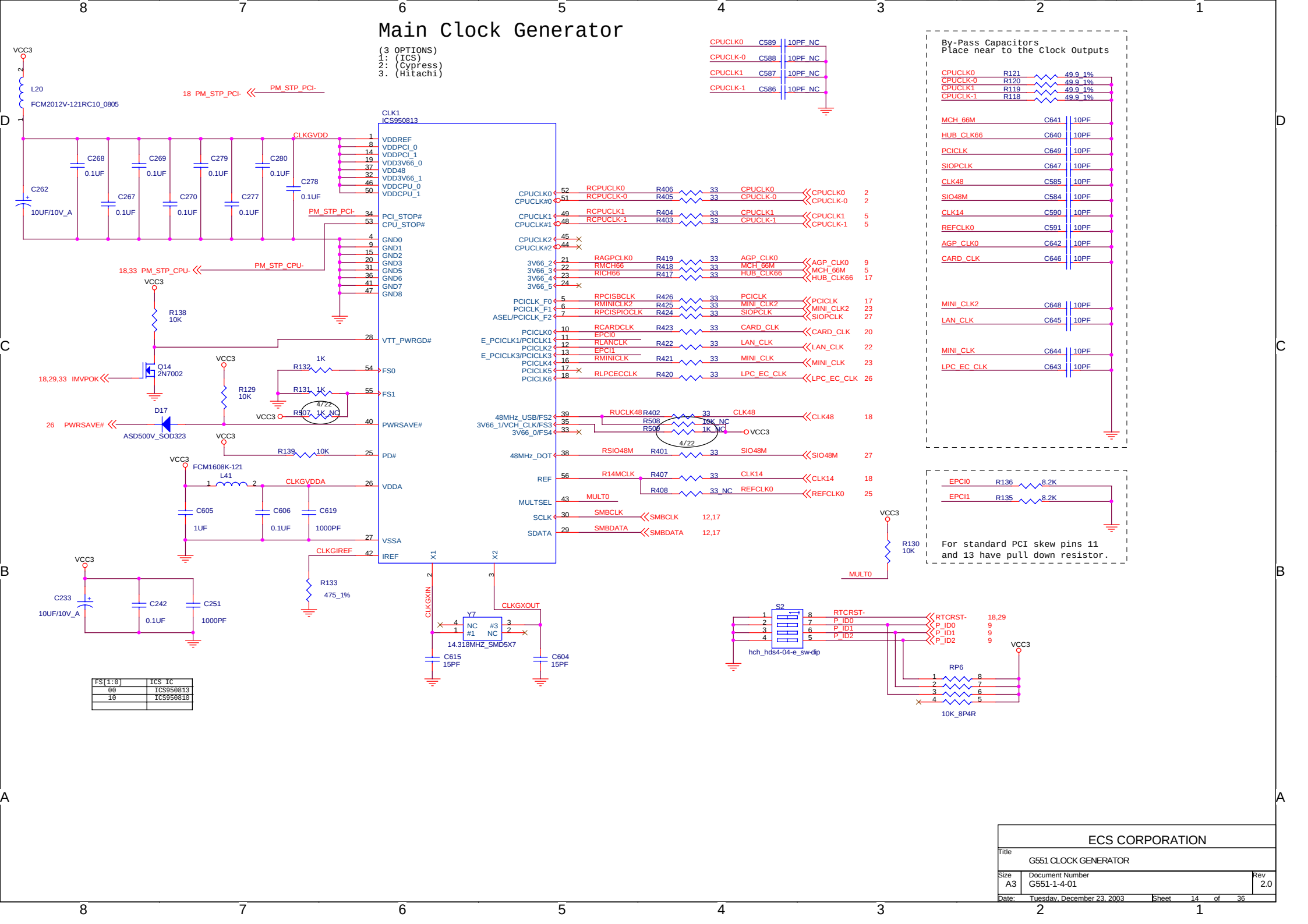

FS[1:0]	ICS IC
00	ICS950813
10	ICS950810

Title	ECS CORPORATION
	G551 CLOCK GENERATOR
Size	A3
Document Number	G551-1-4-01
Rev	2.0
Date:	Tuesday, December 23, 2003
Sheet	14 of 36

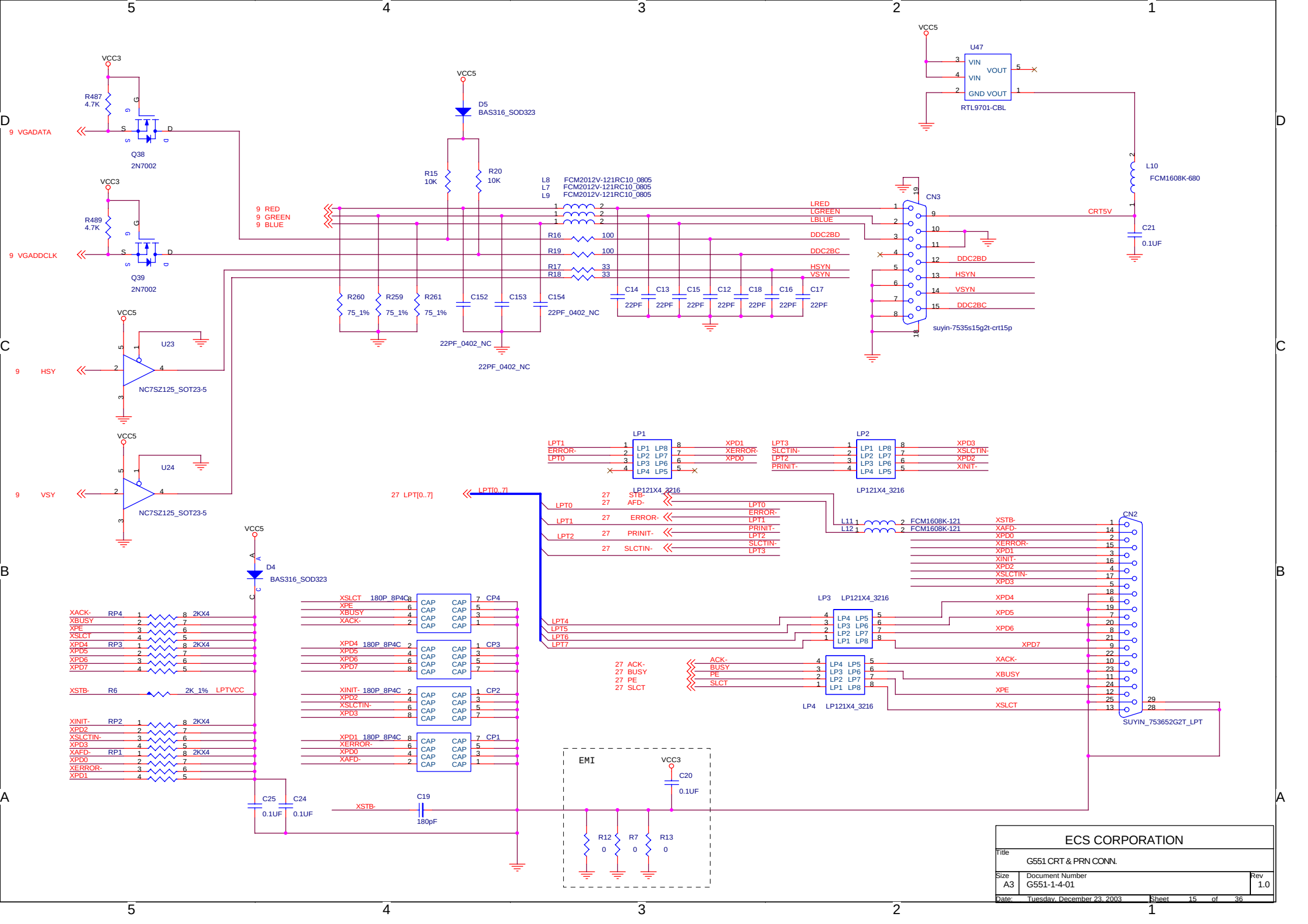
VCC3
R487 4.7K
9 VGADATA
Q38 2N7002
VCC3
R489 4.7K
9 VGADDCLK
Q39 2N7002
VCC5
D5 BAS316_SOD323
R15 10K
R20 10K
9 RED
9 GREEN
9 BLUE
L8 FCM2012V-121RC10_0805
L7 FCM2012V-121RC10_0805
L9 FCM2012V-121RC10_0805
R16 100
R19 100
R17 33
R18 33
LRED
LGREEN
LBLUE
DDC2BD
DDC2BC
HSYN
VSYN
R260 75_1%
R259 75_1%
R261 75_1%
C152 22PF_0402_NC
C153 22PF_0402_NC
C154 22PF_0402_NC
C14 22PF
C13 22PF
C15 22PF
C12 22PF
C18 22PF
C16 22PF
C17 22PF
CN3
suyin-7535s15g2t-crt15p
VCC5
U47
VIN
VOUT
GND VOUT
RTL9701-CBL
L10 FCM1608K-680
CRT5V
C21 0.1UF
VCC5
U23
9 HSY
NC7SZ125_SOT23-5
VCC5
U24
9 VSY
NC7SZ125_SOT23-5
LP1
LP121X4_3216
LPT1
ERROR-
LPT0
XPD1
XERROR-
XPD0
LP2
LP121X4_3216
LPT3
SLCTIN-
LPT2
PRINIT-
XPD3
XSLCTIN-
XPD2
XINIT-
27 LPT[0..7]
LPT[0..7]
27 STB-
27 AFD-
27 ERROR-
27 PRINIT-
27 SLCTIN-
LPT0
LPT1
LPT2
LPT3
L11 FCM1608K-121
L12 FCM1608K-121
CN2
XSTB-
XAFD-
XPD0
XERROR-
XPD1
XINIT-
XPD2
XSLCTIN-
XPD3
SUYIN_753652G2T_LPT
VCC5
D4
BAS316_SOD323
XACK-
XBUSY
XPE
XSLCT
XPD4
XPD5
XPD6
XPD7
RP4
RP3
2KX4
XSTB-
R6
2K_1%
LPTVCC
XINIT-
XPD2
XSLCTIN-
XPD3
RP2
XAFD-
XPD0
XERROR-
XPD1
RP1
180P_8P4C
CP4
CP3
CP2
CP1
LP3
LP4
LP121X4_3216
27 ACK-
27 BUSY
27 PE
27 SLCT
ACK-
BUSY
PE
SLCT
C25 0.1UF
C24 0.1UF
C19 180pF
EMI
VCC3
C20 0.1UF
R12 0
R7 0
R13 0
ECS CORPORATION
Title
G551 CRT & PRN CONN.
Size A3
Document Number G551-1-4-01
Rev 1.0
Date: Tuesday, December 23, 2003
Sheet 15 of 36

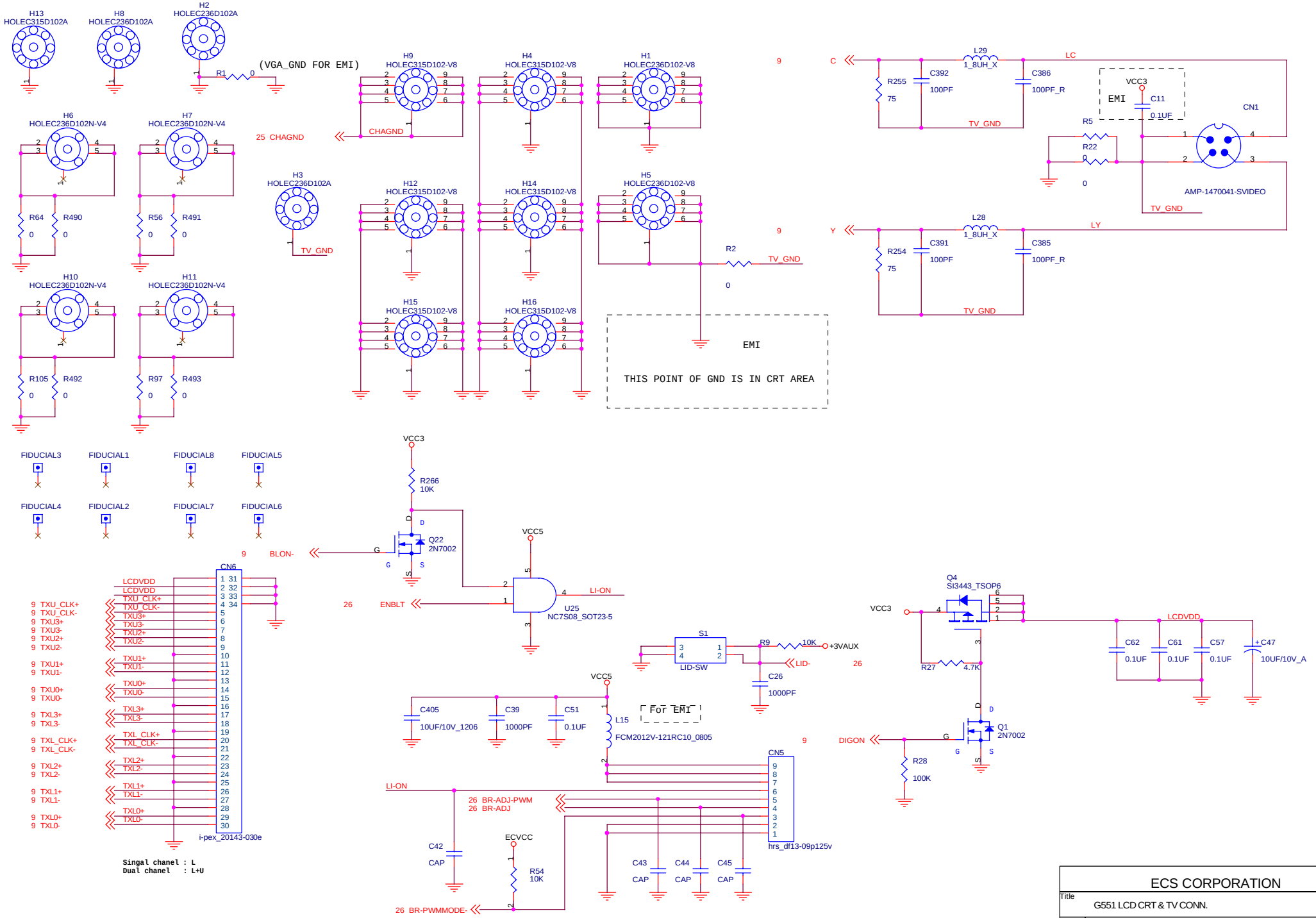

ECS CORPORATION

Title	G551 LCD CRT & TV CONN.	
Size A3	Document Number G551-1-4-01	Rev 1.0
Date: Tuesday, December 23, 2003	Sheet 16 of 36	

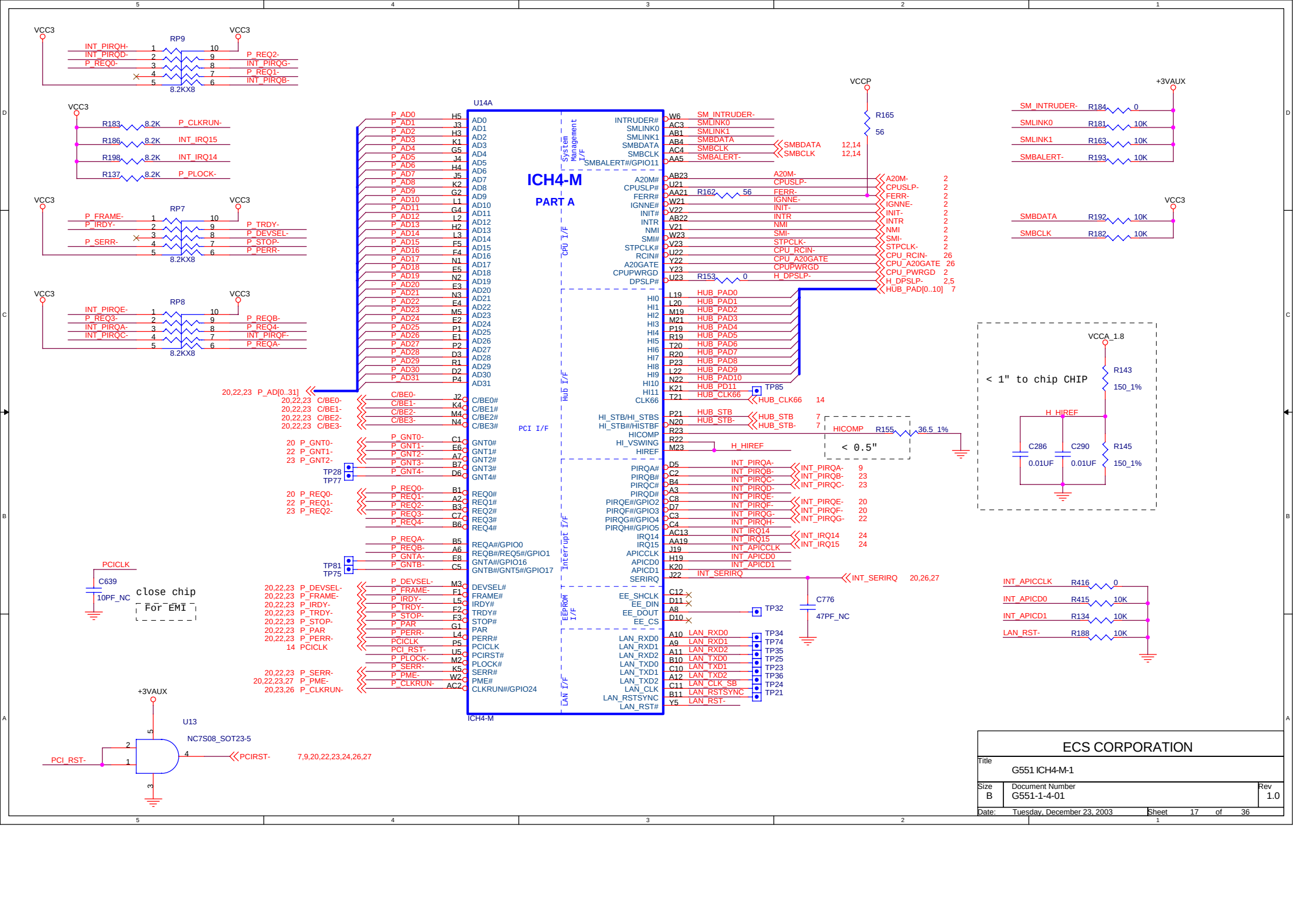

ECS CORPORATION

Title	G551 ICH4-M-1	
Size B	Document Number G551-1-4-01	Rev 1.0
Date: Tuesday, December 23, 2003	Sheet 17 of 36	

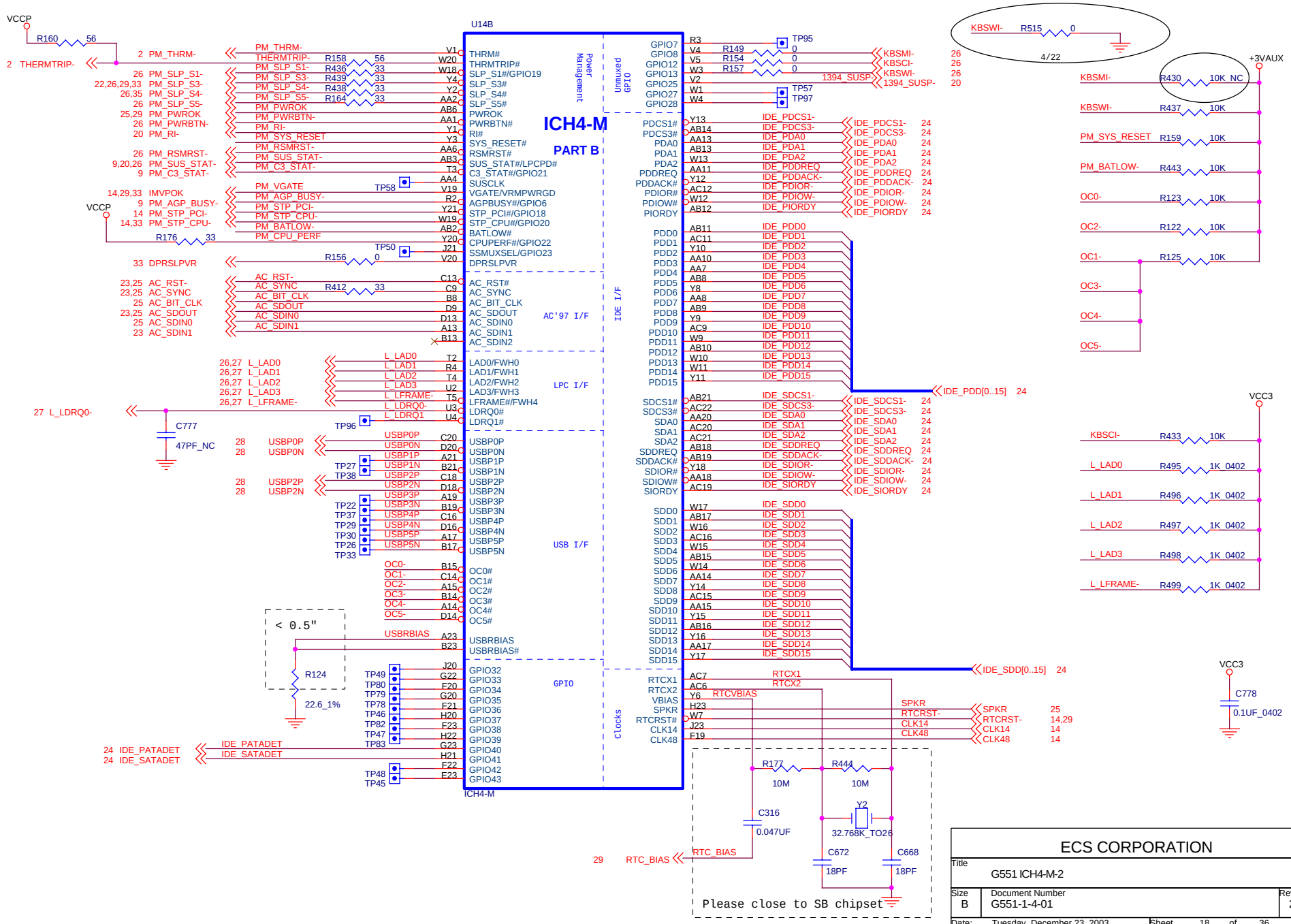
U14B
ICH4-M
PART B
ICH4-M
Power Management
Unmuxed GPIO
IDE I/F
AC'97 I/F
LPC I/F
USB I/F
GPIO
Clocks
VCCP
R160 56
2 THERMTRIP-
2 PM_THRM-
PM_THRM-
THERMTRIP- R158 56
PM_SLP_S1- R436 33
PM_SLP_S3- R439 33
PM_SLP_S4- R438 33
PM_SLP_S5- R164 33
26 PM_SLP_S1-
22,26,29,33 PM_SLP_S3-
26,35 PM_SLP_S4-
26 PM_SLP_S5-
25,29 PM_PWROK
26 PM_PWRBTN-
20 PM_RI-
PM_SYS_RESET
26 PM_RSMRST-
9,20,26 PM_SUS_STAT-
9 PM_C3_STAT-
14,29,33 IMVPOK
9 PM_AGP_BUSY-
14 PM_STP_PCI-
14,33 PM_STP_CPU-
PM_BATLOW-
PM_CPU_PERF
VCCP
R176 33
TP58
PM_VGATE
PM_AGP_BUSY-
PM_STP_PCI-
PM_STP_CPU-
TP50
R156 0
33 DPRSLPVR
23,25 AC_RST-
23,25 AC_SYNC
25 AC_BIT_CLK
23,25 AC_SDOUT
25 AC_SDIN0
23 AC_SDIN1
AC_RST-
AC_SYNC R412 33
AC_BIT_CLK
AC_SDOUT
AC_SDIN0
AC_SDIN1
26,27 L_LAD0
26,27 L_LAD1
26,27 L_LAD2
26,27 L_LAD3
26,27 L_LFRAME-
L_LAD0
L_LAD1
L_LAD2
L_LAD3
L_LFRAME-
L_LDRQ0-
L_LDRQ1
27 L_LDRQ0-
C777
47PF_NC
TP96
28 USBP0P
28 USBP0N
USBP0P
USBP0N
USBP1P
USBP1N
TP27
TP38
28 USBP2P
28 USBP2N
USBP2P
USBP2N
USBP3P
USBP3N
TP22
TP37
USBP4P
USBP4N
TP29
TP30
USBP5P
TP26
USBP5N
TP33
OC0-
OC1-
OC2-
OC3-
OC4-
OC5-
< 0.5"
USBRBIAS
R124
22.6_1%
TP49
TP80
TP79
TP78
TP46
TP82
TP47
TP83
TP48
TP45
24 IDE_PATADET
24 IDE_SATADET
IDE_PATADET
IDE_SATADET
THRM#
THRMTRIP#
SLP_S1#/GPIO19
SLP_S3#
SLP_S4#
SLP_S5#
PWROK
PWRBTN#
RI#
SYS_RESET#
RSMRST#
SUS_STAT#/LPCPD#
C3_STAT#/GPIO21
SUSCLK
VGATE/VRMPWRGD
AGPBUSY#/GPIO6
STP_PCI#/GPIO18
STP_CPU#/GPIO20
BATLOW#
CPUPERF#/GPIO22
SSMUXSEL/GPIO23
DPRSLPVR
AC_RST#
AC_SYNC
AC_BIT_CLK
AC_SDOUT
AC_SDIN0
AC_SDIN1
AC_SDIN2
LAD0/FWH0
LAD1/FWH1
LAD2/FWH2
LAD3/FWH3
LFRAME#/FWH4
LDRQ0#
LDRQ1#
USBP0P
USBP0N
USBP1P
USBP1N
USBP2P
USBP2N
USBP3P
USBP3N
USBP4P
USBP4N
USBP5P
USBP5N
OC0#
OC1#
OC2#
OC3#
OC4#
OC5#
USBRBIAS
USBRBIAS#
GPIO32
GPIO33
GPIO34
GPIO35
GPIO36
GPIO37
GPIO38
GPIO39
GPIO40
GPIO41
GPIO42
GPIO43
ICH4-M
GPIO7
GPIO8
GPIO12
GPIO13
GPIO25
GPIO27
GPIO28
R3
V4 R149 0
V5 R154 0
W3 R157 0
V2
W1
W4
TP95
TP57
TP97
KBSMI-
KBSCI-
KBSWI-
1394_SUSP
1394_SUSP-
26
26
26
20
KBSWI- R515 0
4/22
PDCS1#
PDCS3#
PDA0
PDA1
PDA2
PDDREQ
PDDACK#
PDIOR#
PDIOW#
PIORDY
IDE_PDCS1-
IDE_PDCS3-
IDE_PDA0
IDE_PDA1
IDE_PDA2
IDE_PDDREQ
IDE_PDDACK-
IDE_PDIOR-
IDE_PDIOW-
IDE_PIORDY
24
PDD0
PDD1
PDD2
PDD3
PDD4
PDD5
PDD6
PDD7
PDD8
PDD9
PDD10
PDD11
PDD12
PDD13
PDD14
PDD15
IDE_PDD0
IDE_PDD1
IDE_PDD2
IDE_PDD3
IDE_PDD4
IDE_PDD5
IDE_PDD6
IDE_PDD7
IDE_PDD8
IDE_PDD9
IDE_PDD10
IDE_PDD11
IDE_PDD12
IDE_PDD13
IDE_PDD14
IDE_PDD15
IDE_PDD[0..15] 24
SDCS1#
SDCS3#
SDA0
SDA1
SDA2
SDDREQ
SDDACK#
SDIOR#
SDIOW#
SIORDY
IDE_SDCS1-
IDE_SDCS3-
IDE_SDA0
IDE_SDA1
IDE_SDA2
IDE_SDDREQ
IDE_SDDACK-
IDE_SDIOR-
IDE_SDIOW-
IDE_SIORDY
SDD0
SDD1
SDD2
SDD3
SDD4
SDD5
SDD6
SDD7
SDD8
SDD9
SDD10
SDD11
SDD12
SDD13
SDD14
SDD15
IDE_SDD0
IDE_SDD1
IDE_SDD2
IDE_SDD3
IDE_SDD4
IDE_SDD5
IDE_SDD6
IDE_SDD7
IDE_SDD8
IDE_SDD9
IDE_SDD10
IDE_SDD11
IDE_SDD12
IDE_SDD13
IDE_SDD14
IDE_SDD15
IDE_SDD[0..15] 24
RTCX1
RTCX2
VBIAS
SPKR
RTCRST#
CLK14
CLK48
RTCVBIAS
SPKR 25
RTCRST- 14,29
CLK14 14
CLK48 14
R177 10M
R444 10M
Y2
32.768K_TO26
C316 0.047UF
C672 18PF
C668 18PF
29 RTC_BIAS
RTC_BIAS
Please close to SB chipset
+3VAUX
KBSMI- R430 10K_NC
KBSWI- R437 10K
PM_SYS_RESET R159 10K
PM_BATLOW- R443 10K
OC0- R123 10K
OC2- R122 10K
OC1- R125 10K
OC3-
OC4-
OC5-
VCC3
KBSCI- R433 10K
L_LAD0 R495 1K_0402
L_LAD1 R496 1K_0402
L_LAD2 R497 1K_0402
L_LAD3 R498 1K_0402
L_LFRAME- R499 1K_0402
VCC3
C778
0.1UF_0402
ECS CORPORATION
Title
G551 ICH4-M-2
Size B
Document Number G551-1-4-01
Rev 2.B
Date: Tuesday, December 23, 2003
Sheet 18 of 36

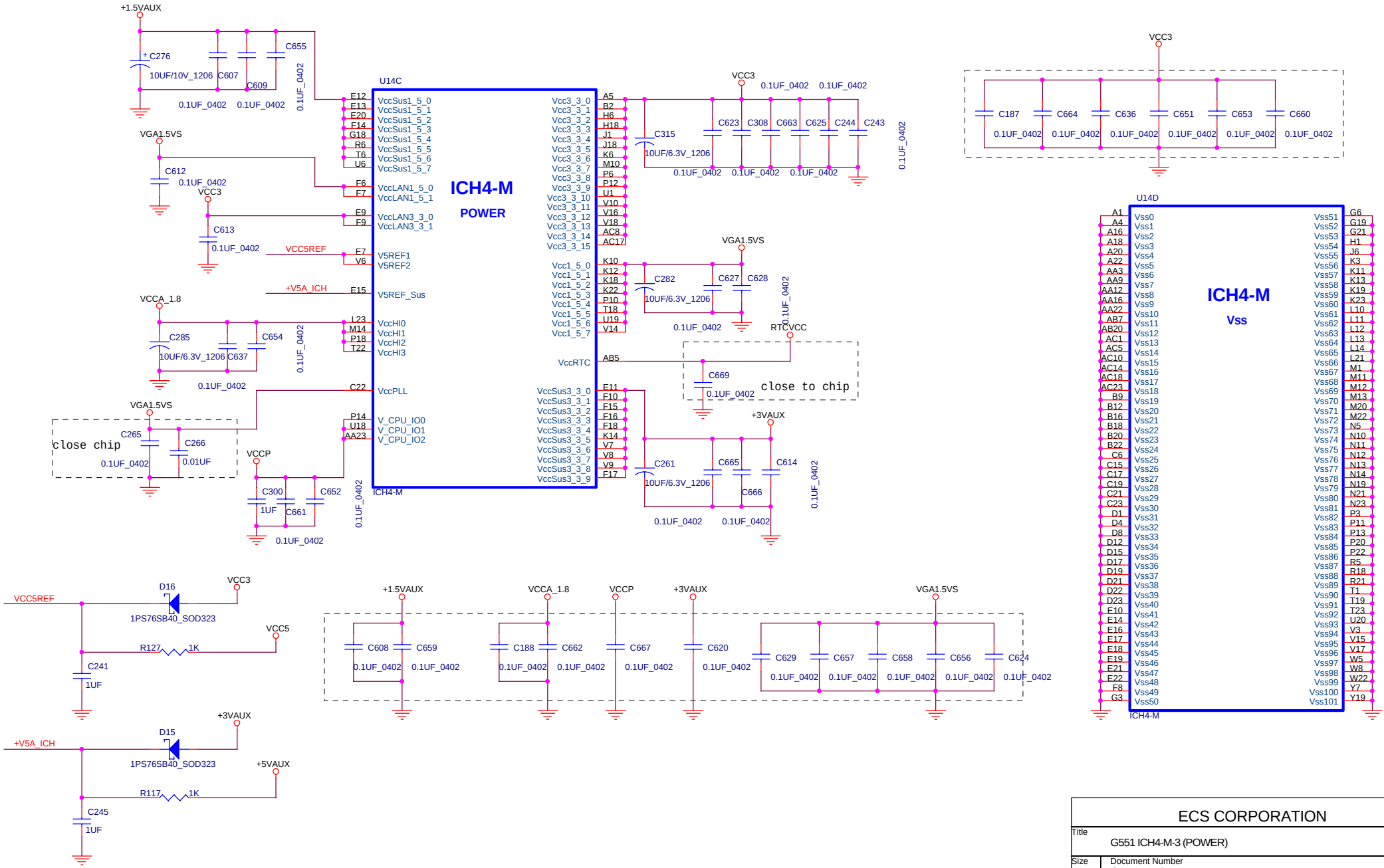

ECS CORPORATION

Title	G551 ICH4-M-3 (POWER)	
Size: B	Document Number: G551-1-4-01	Rev: 1.0
Date: Tuesday, December 23, 2003	Sheet 19 of 36	

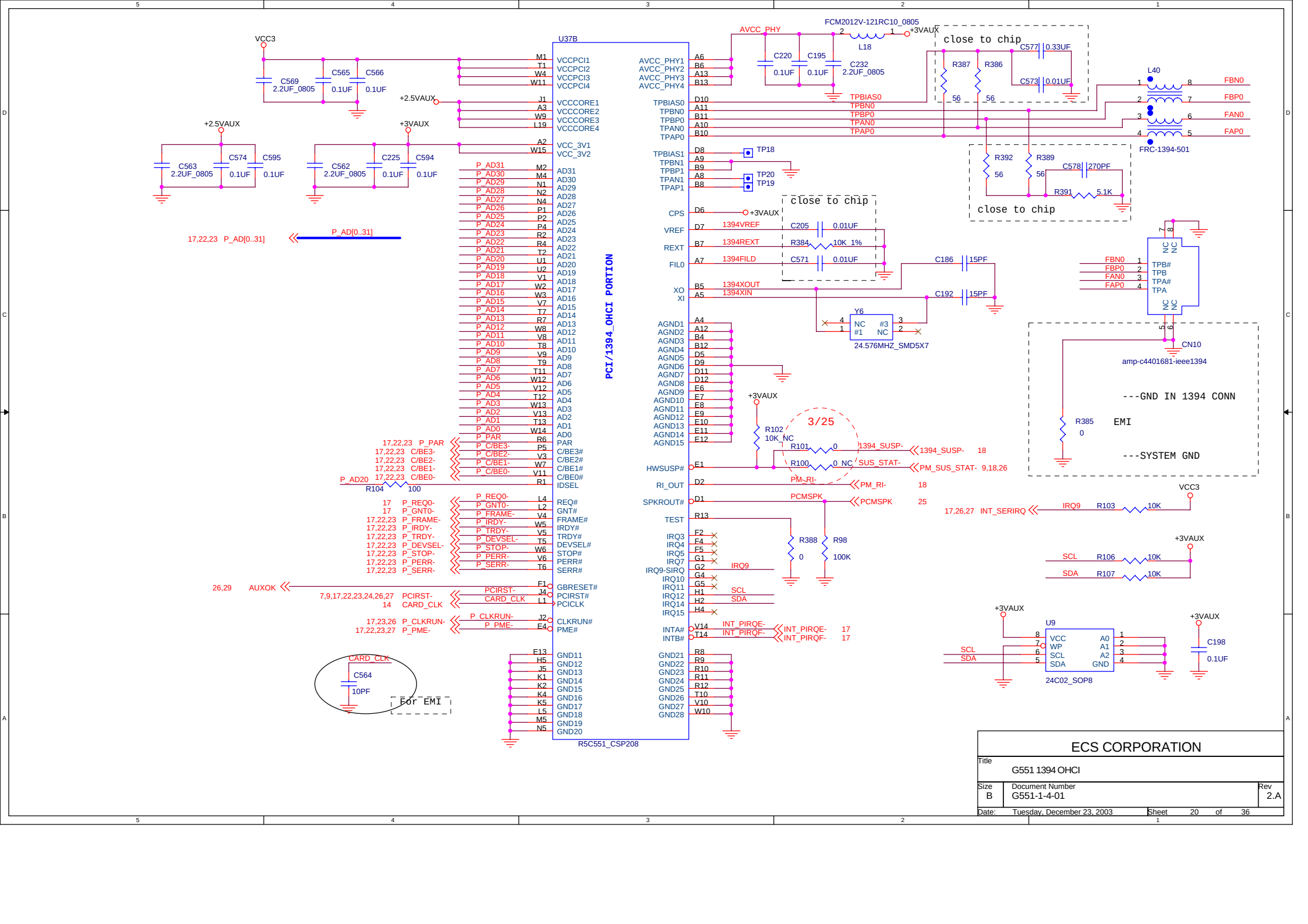
U37B
PCI/1394_OHCI PORTION
R5C551_CSP208
VCC3
+2.5VAUX
+3VAUX
AVCC_PHY
FCM2012V-121RC10_0805
L18
+3VAUX
close to chip
C577 0.33UF
C573 0.01UF
R387
R386
56
56
L40
FBN0
FBP0
FAN0
FAP0
FRC-1394-501
TPBIAS0
TPBN0
TPBP0
TPAN0
TPAP0
R392
R389
C578 270PF
R391 5.1K
close to chip
TP18
TP20
TP19
CPS
VREF
REXT
FIL0
1394VREF
1394REXT
1394FILD
C205 0.01UF
R384 10K 1%
C571 0.01UF
C186 15PF
C192 15PF
1394XOUT
1394XIN
Y6
24.576MHZ_SMD5X7
P_AD[0..31]
17,22,23 P_AD[0..31]
3/25
R102 10K_NC
R101 0
R100 0 NC
1394_SUSP-
SUS_STAT-
1394_SUSP- 18
PM_SUS_STAT- 9,18,26
PM_RI-
PM_RI- 18
PCMSPK
PCMSPK 25
R388 0
R98 100K
IRQ9
SCL
SDA
INT_PIRQE-
INT_PIRQF-
INT_PIRQE- 17
INT_PIRQF- 17
P_PAR
P_C/BE3-
P_C/BE2-
P_C/BE1-
P_C/BE0-
R104 100
P_REQ0-
P_GNT0-
P_FRAME-
P_IRDY-
P_TRDY-
P_DEVSEL-
P_STOP-
P_PERR-
P_SERR-
AUXOK
PCIRST-
CARD_CLK
P_CLKRUN-
P_PME-
CARD_CLK
C564
10PF
For EMI
TPB#
TPB
TPA#
TPA
CN10
amp-c4401681-ieee1394
---GND IN 1394 CONN
R385 0
EMI
---SYSTEM GND
IRQ9 R103 10K
INT_SERIRQ
SCL R106 10K
SDA R107 10K
U9
24C02_SOP8
C198 0.1UF
ECS CORPORATION
Title
G551 1394 OHCI
Size B
Document Number G551-1-4-01
Rev 2.A
Date: Tuesday, December 23, 2003
Sheet 20 of 36

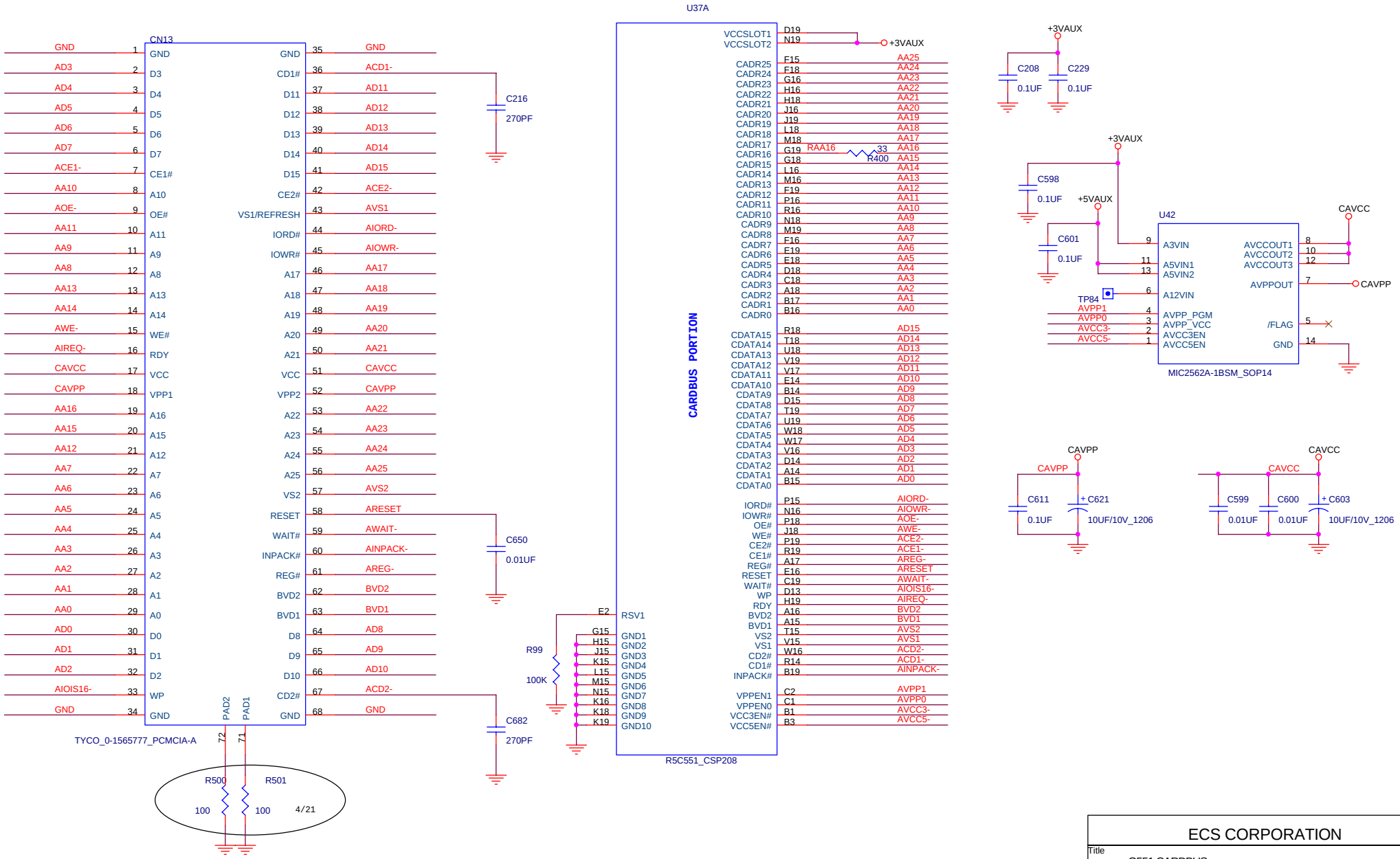

ECS CORPORATION			
Title: G551 CARDBUS			
Size: B	Document Number: G551-1-4-01		Rev: 2.0
Date: Tuesday, December 23, 2003	Sheet 21 of 36		

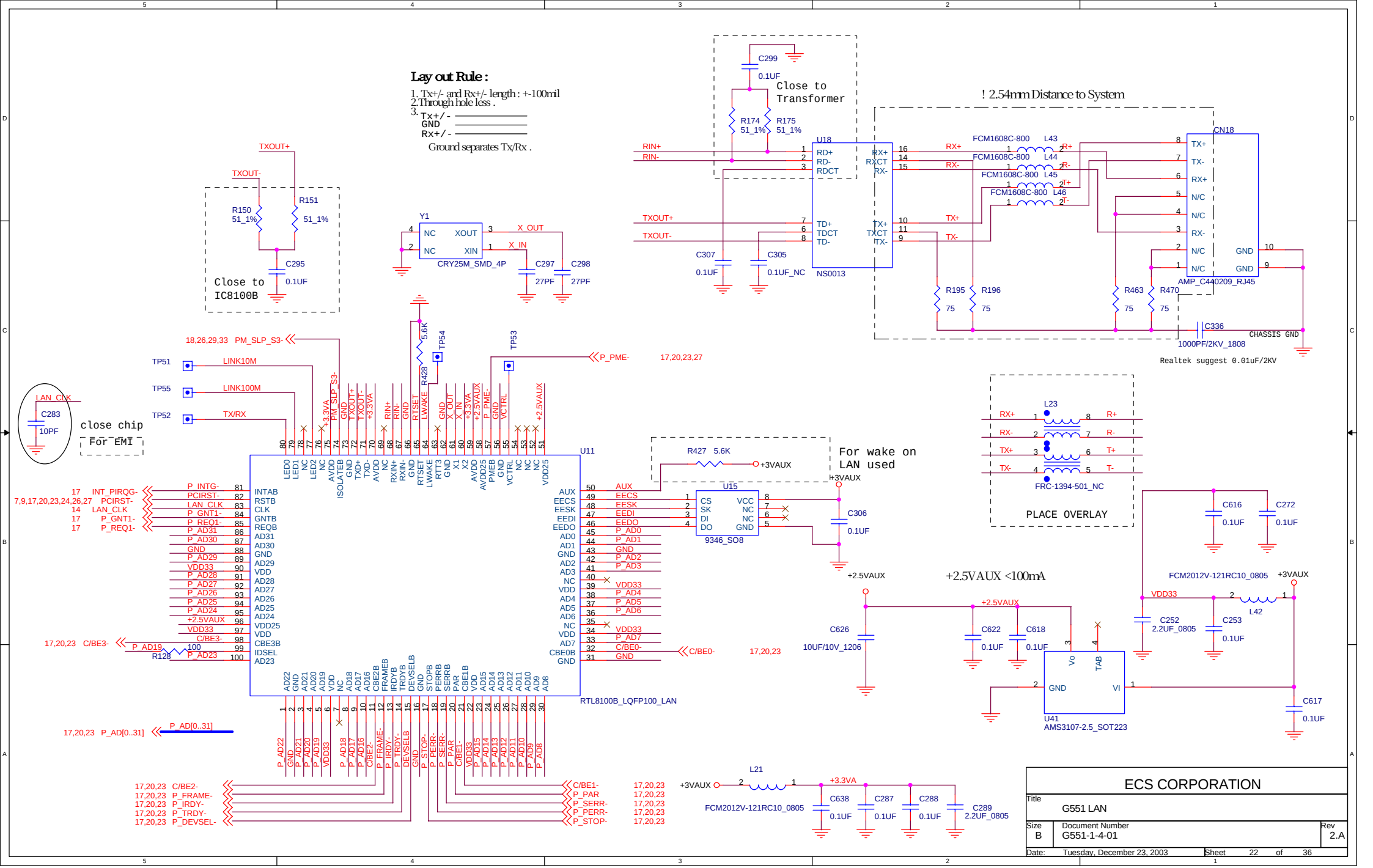
Lay out Rule :
1. Tx+/- and Rx+/- length : +-100mil
2.Through hole less .
3. Tx+/- ——————
GND ——————
Rx+/- ——————
Ground separates Tx/Rx .
Close to Transformer
! 2.54mm Distance to System
Close to IC8100B
close chip
For EMI
For wake on LAN used
PLACE OVERLAY
+2.5VAUX <100mA
Realtek suggest 0.01uF/2KV
CRY25M_SMD_4P
NS0013
AMP_C440209_RJ45
FRC-1394-501_NC
9346_SO8
RTL8100B_LQFP100_LAN
AMS3107-2.5_SOT223
FCM2012V-121RC10_0805
FCM1608C-800
ECS CORPORATION
Title
G551 LAN
Size
B
Document Number
G551-1-4-01
Rev
2.A
Date: Tuesday, December 23, 2003
Sheet 22 of 36

MINI PCI SOCKET

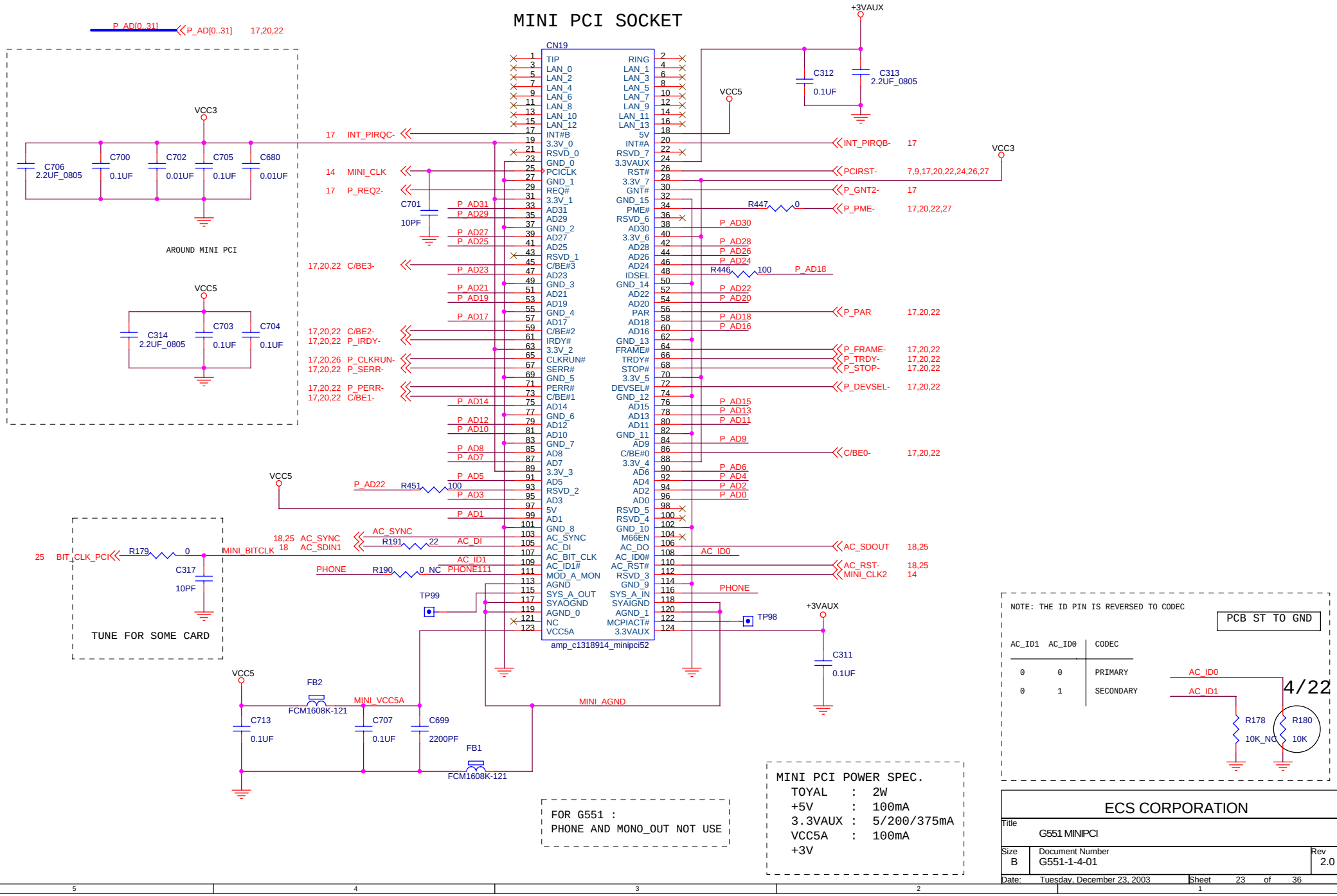

Company	ECS CORPORATION
Title	G551 MINIPCI
Size	B
Document Number	G551-1-4-01
Rev	2.0
Date	Tuesday, December 23, 2003
Sheet	23 of 36

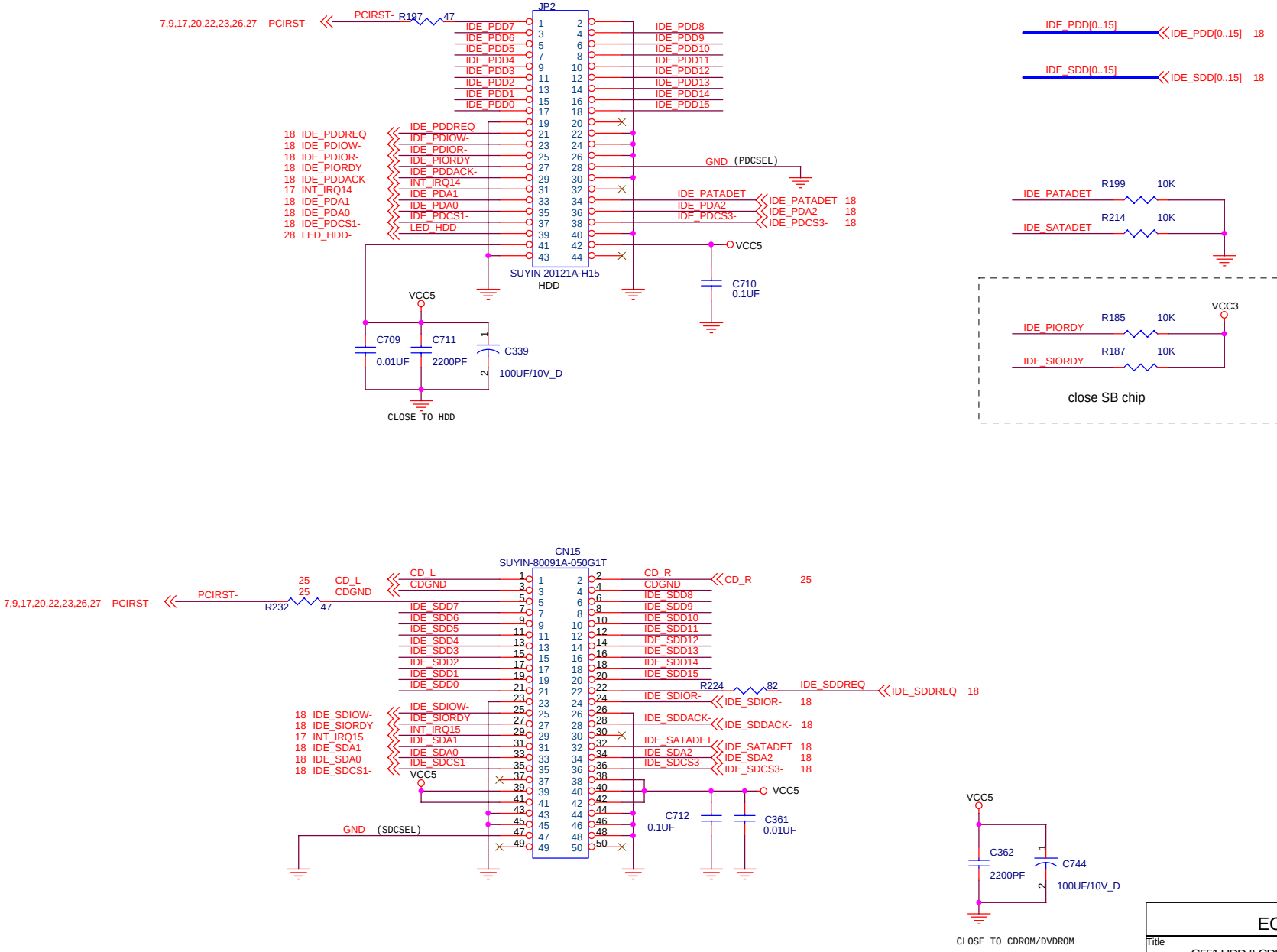

ECS CORPORATION		
Title: G551 HDD & CDROM CONN.		
Size: B	Document Number: G551-1-4-01	Rev: 1.0
Date: Tuesday, December 23, 2003	Sheet 24 of 36	

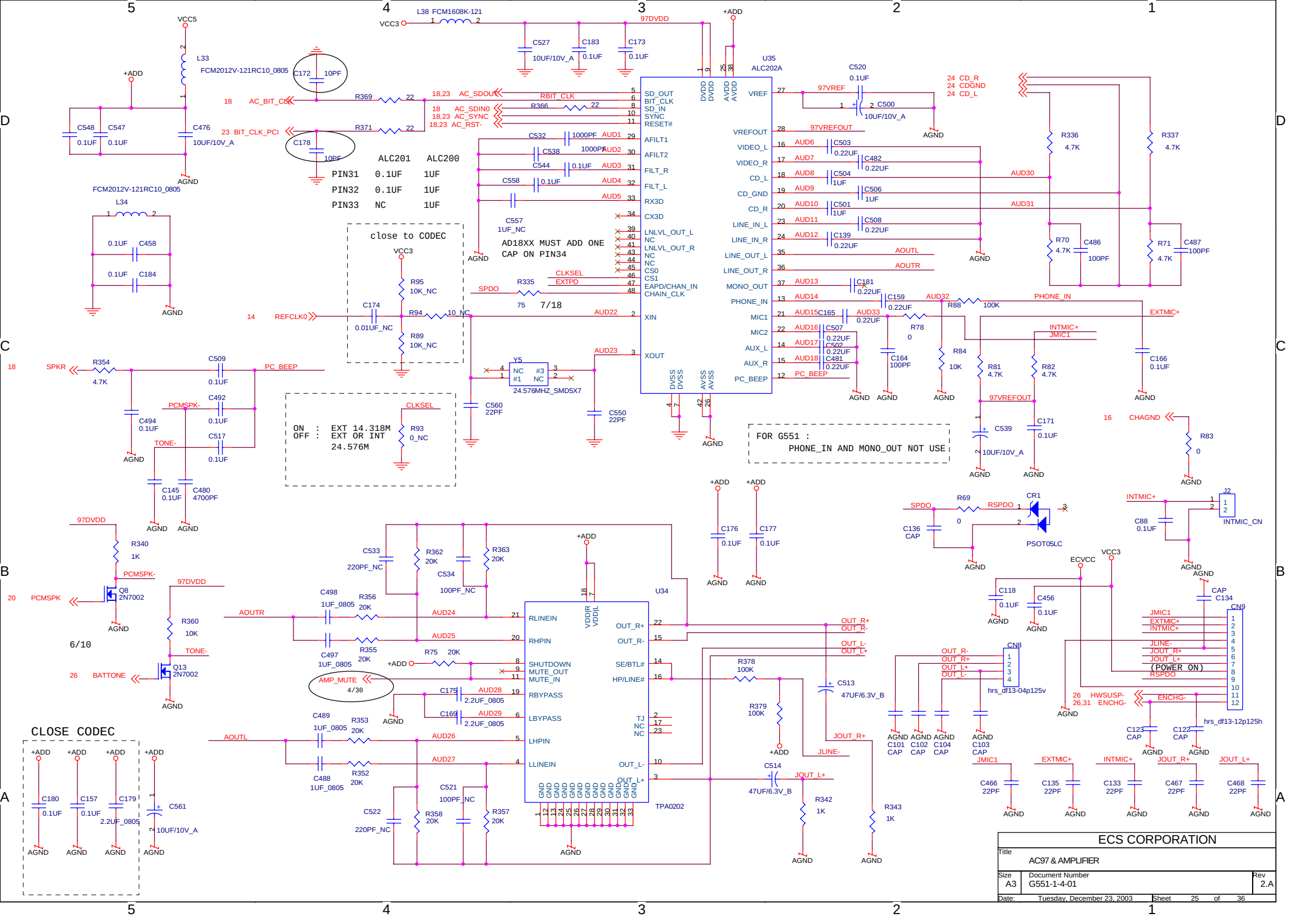
ALC201 ALC200
PIN31 0.1UF 1UF
PIN32 0.1UF 1UF
PIN33 NC 1UF
close to CODEC
AD18XX MUST ADD ONE CAP ON PIN34
ON : EXT 14.318M
OFF : EXT OR INT 24.576M
FOR G551 : PHONE_IN AND MONO_OUT NOT USE
CLOSE CODEC
6/10
4/30
7/18
(POWER ON)
ECS CORPORATION
AC97 & AMPLIFIER
G551-1-4-01
2.A
Tuesday, December 23, 2003
25 of 36

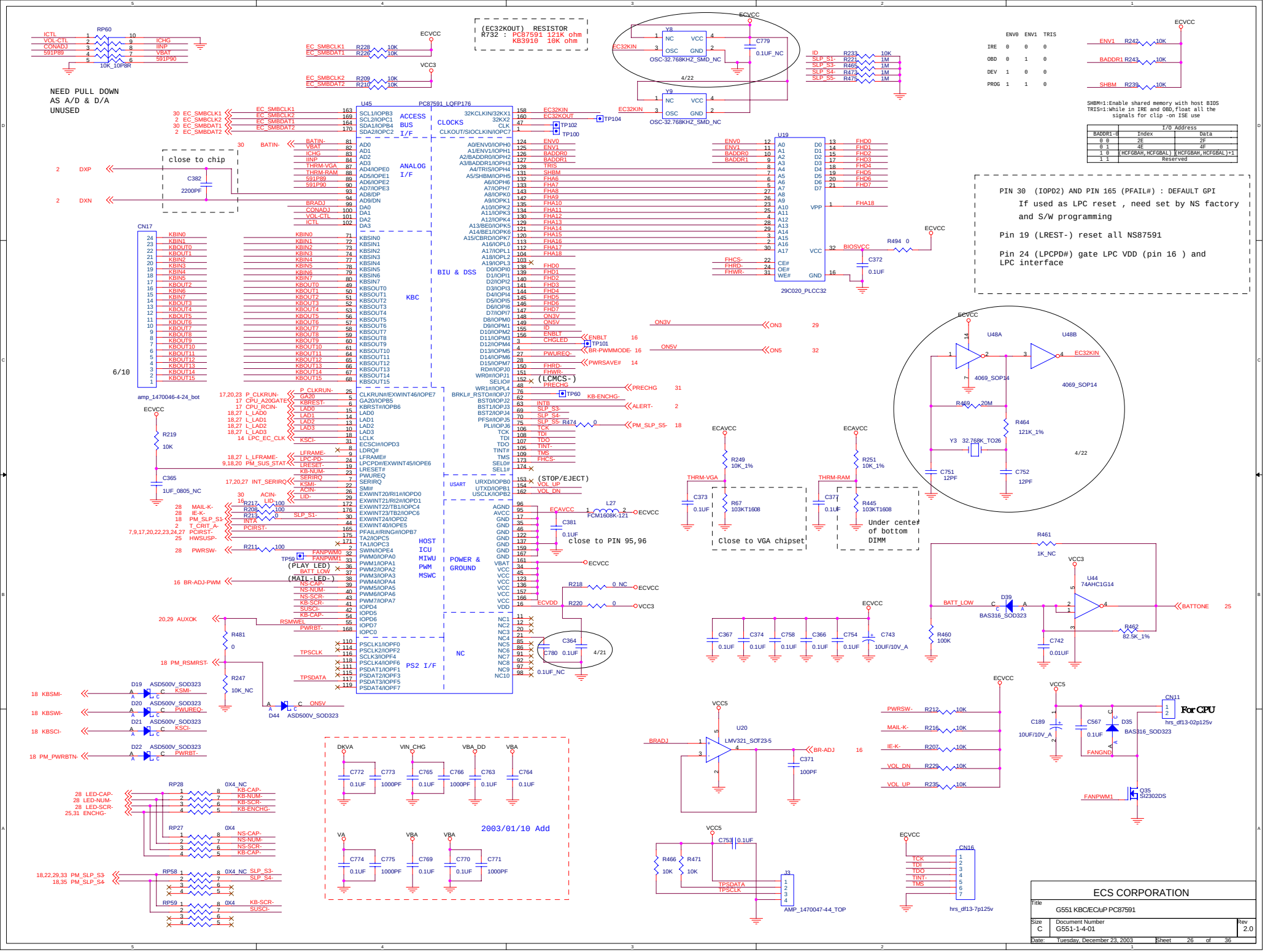

ENV0	ENV1	TRIS
IRE 0	0	0
OBD 0	1	0
DEV 1	0	0
PROG 1	1	0

SHBM=1:Enable shared memory with host BIOS
TRIS=1:While in IRE and OBD,float all the signals for clip -on ISE use

I/O Address		
BADDR1-0	Index	Data
0 0	2E	2F
0 1	4E	4F
1 0	(HCFGBAH,HCFGBAL)	(HCFGBAH,HCFGBAL)+1
1 1	Reserved	

PIN 30 (IOPD2) AND PIN 165 (PFAIL#) : DEFAULT GPI
If used as LPC reset , need set by NS factory and S/W programming

Pin 19 (LRESTT-) reset all NS87591

Pin 24 (LPCPD#) gate LPC VDD (pin 16) and LPC interface

ECS CORPORATION

Title	G551 KBC/EC/uP PC87591	
Size C	Document Number G551-1-4-01	Rev 2.0
Date: Tuesday, December 23, 2003	Sheet 26 of 36	

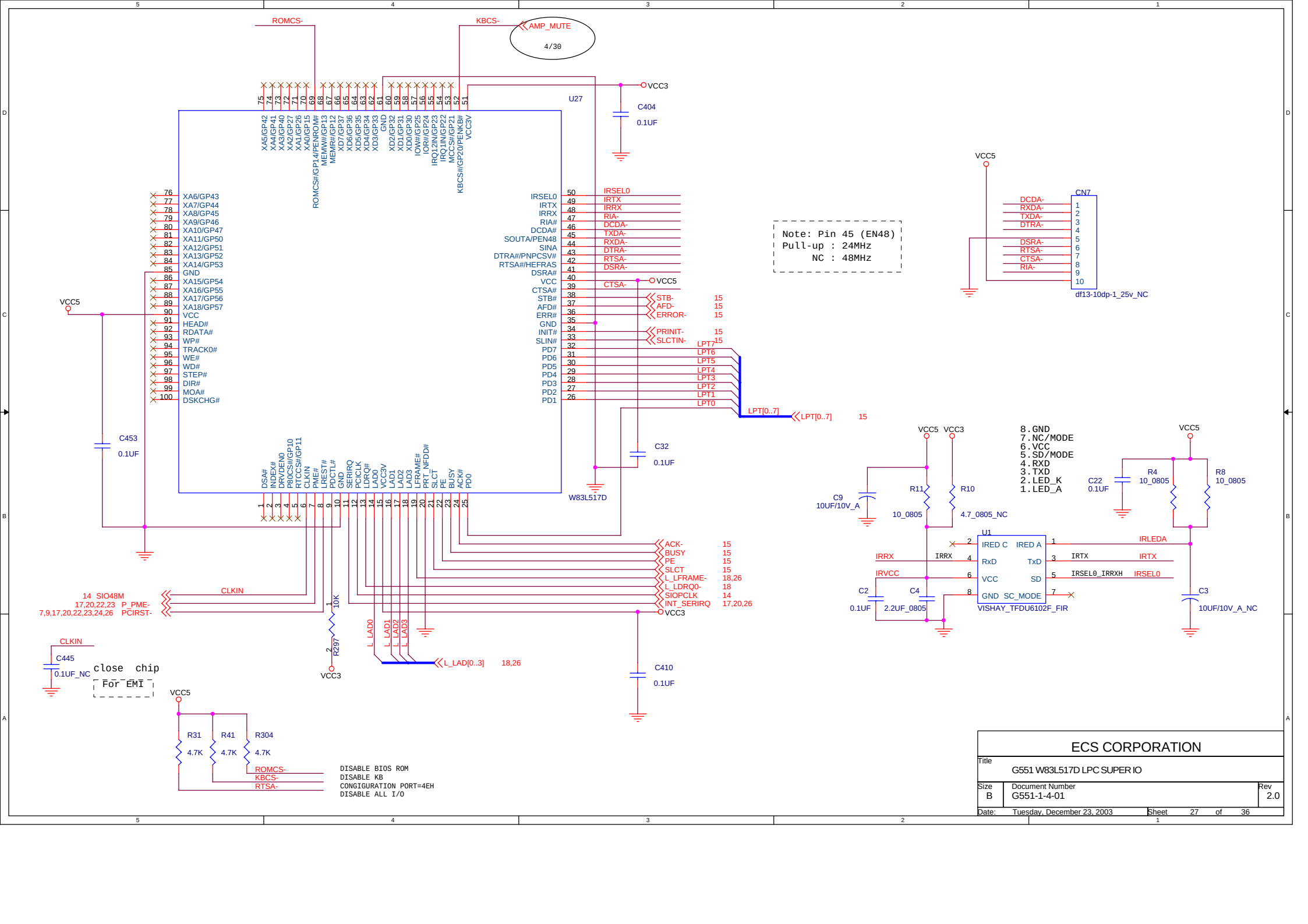

ECS CORPORATION		
Title: G551 W83L517D LPC SUPER IO		
Size: B	Document Number: G551-1-4-01	Rev: 2.0
Date: Tuesday, December 23, 2003	Sheet 27 of 36	

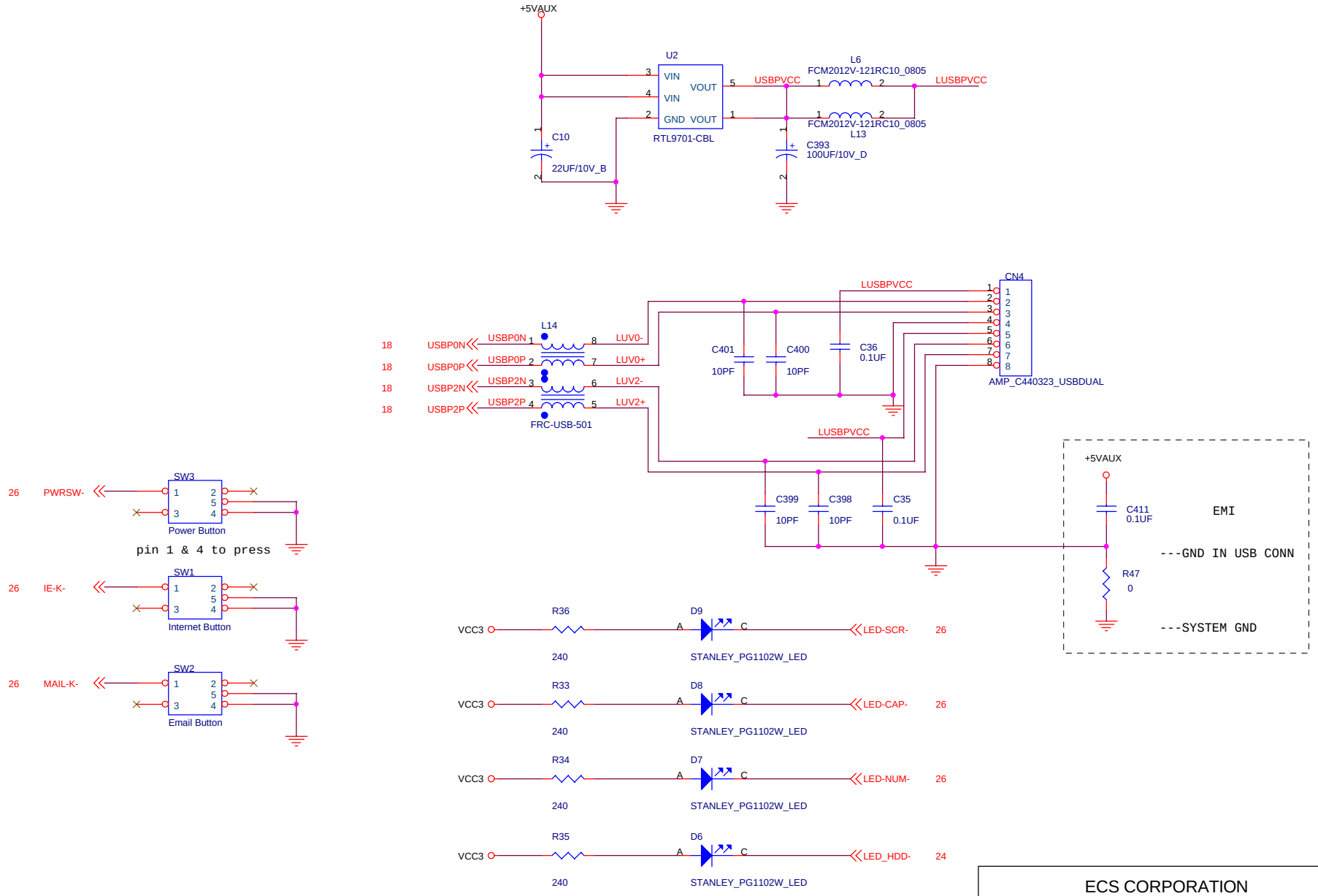

Title	G551 USB PORT & LEDs
Size	B
Document Number	G551-1-4-01
Rev	1.0
Date:	Tuesday, December 23, 2003
Sheet	28 of 36

ECS CORPORATION

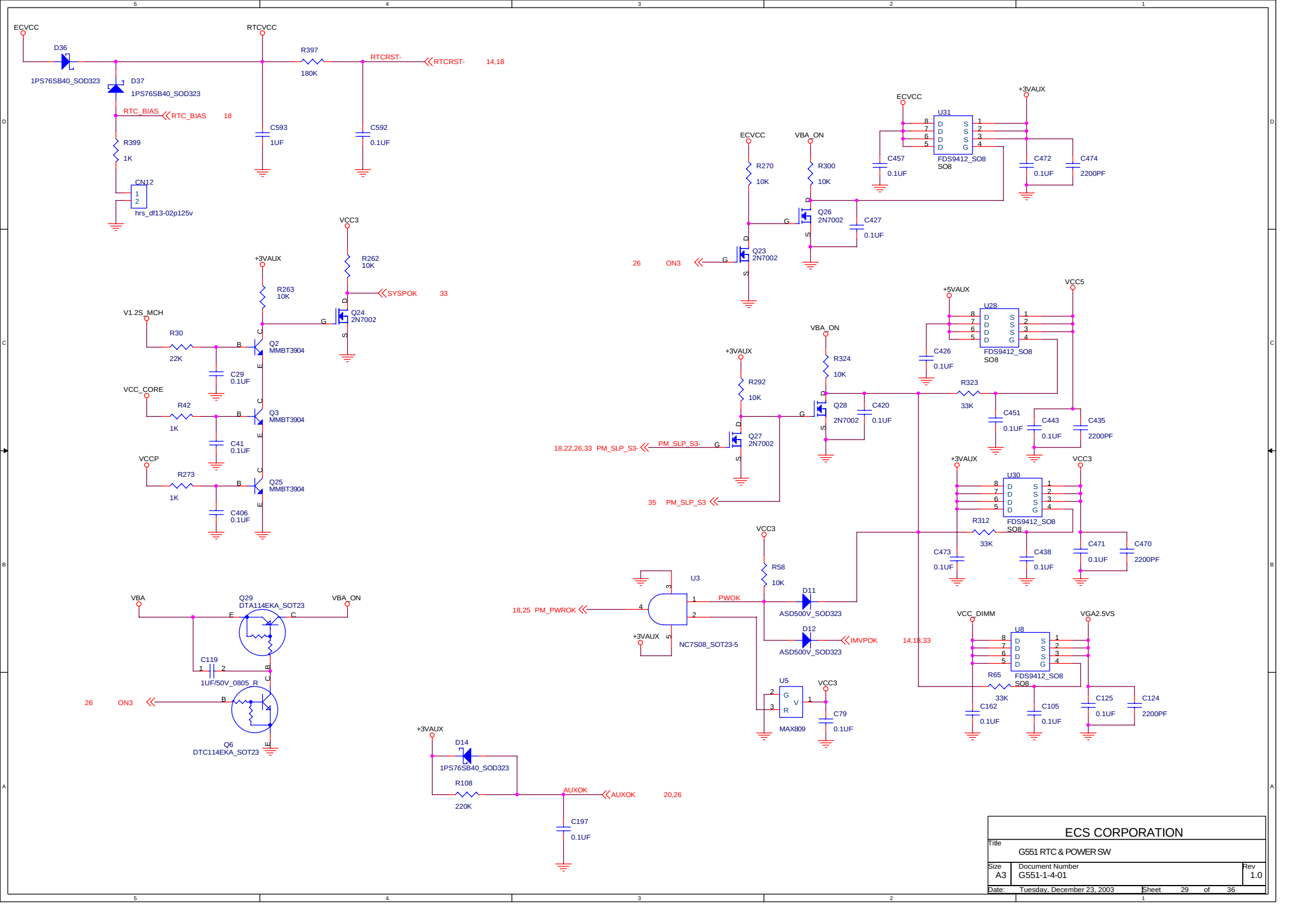

ECS CORPORATION		
Title: G551 RTC & POWER SW		
Size: A3	Document Number: G551-1-4-01	Rev: 1.0
Date: Tuesday, December 23, 2003	Sheet 29 of 36	

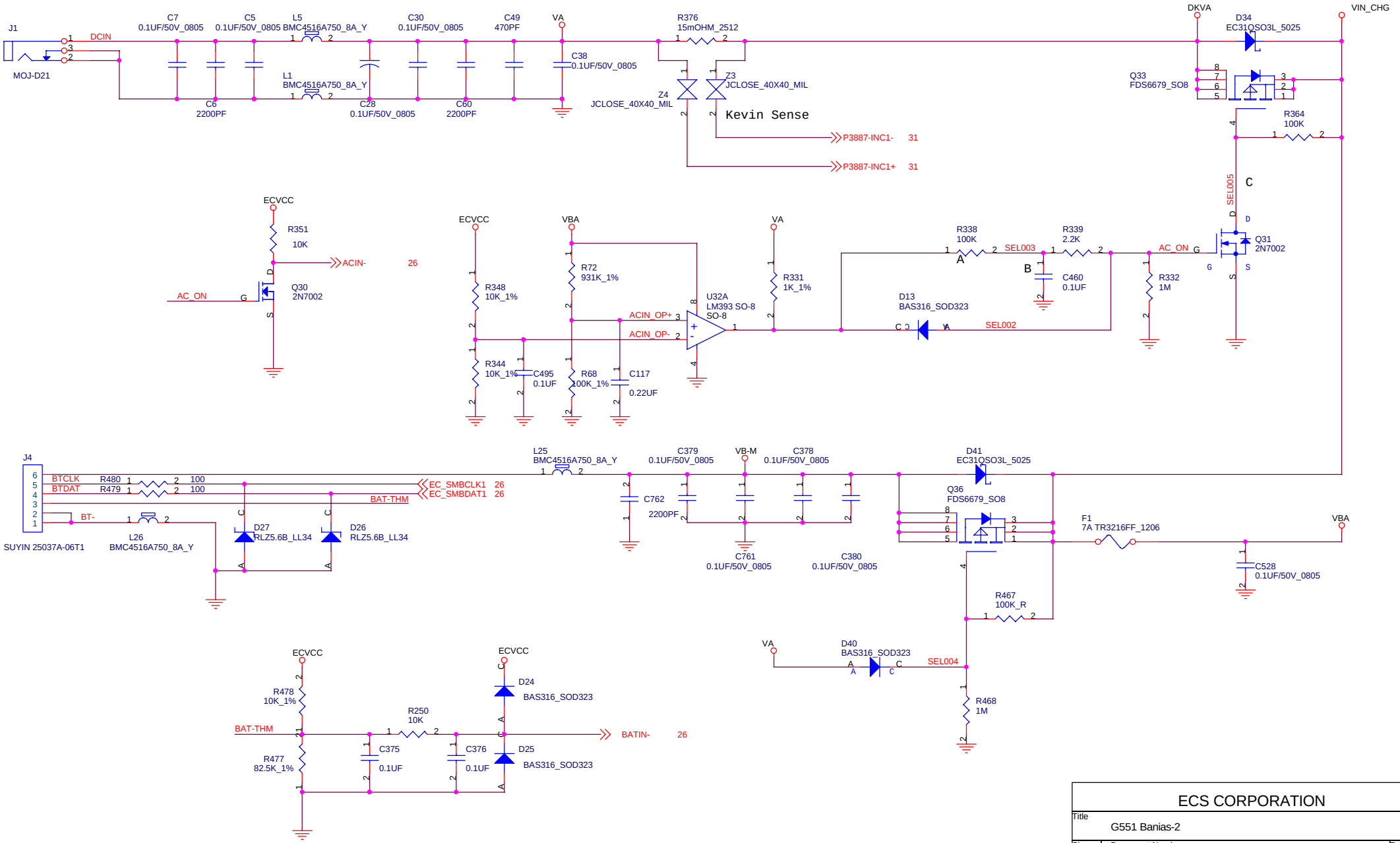

ECS CORPORATION		
Title: G551 Banias-2		
Size: B	Document Number: G551-1-4-01	Rev: 1.0
Date: Tuesday, December 23, 2003	Sheet 30 of 36	

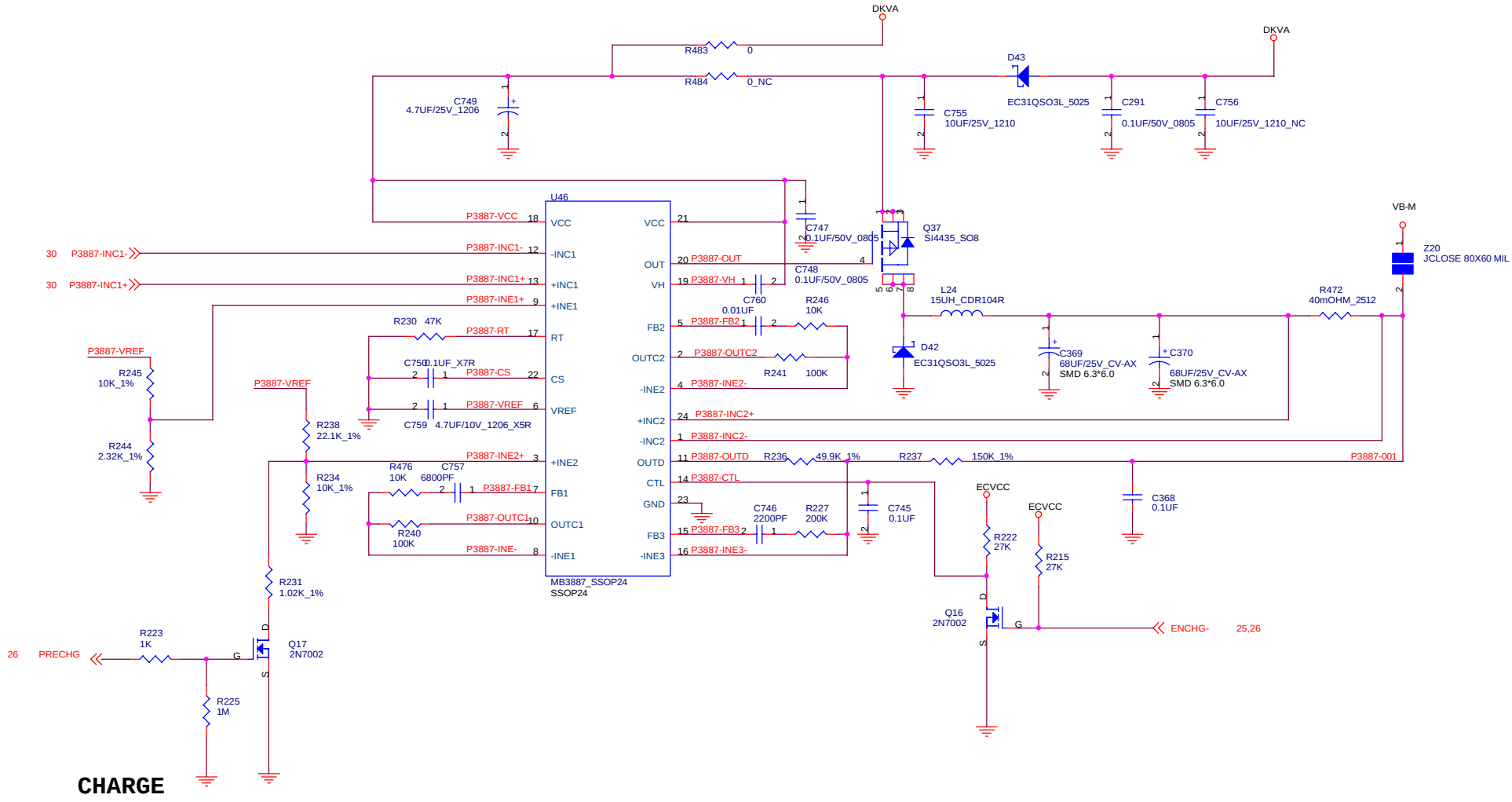

ECS CORPORATION		
Title: G551 CHARGER_MB3887		
Size: A3	Document Number: G551-1-4-01	Rev: 1.0
Date: Tuesday, December 23, 2003	Sheet 31 of 36	

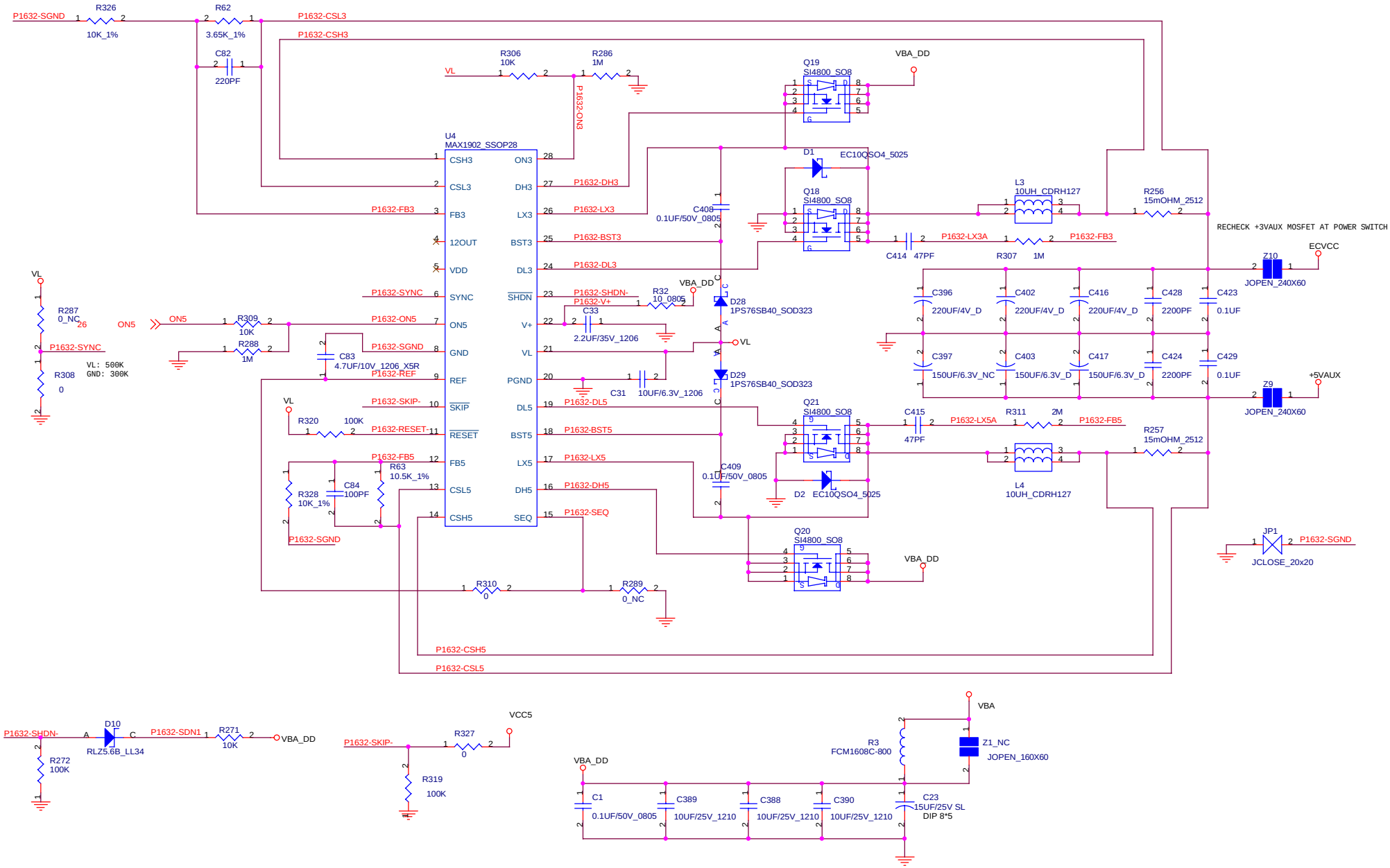

ECS CORPORATION		
Title: +5VAUX/+3VAUX/12VA_MAX1902		
Size: A3	Document Number: G551-1-4-01	Rev: 1.0
Date: Tuesday, December 23, 2003	Sheet 32 of 36	

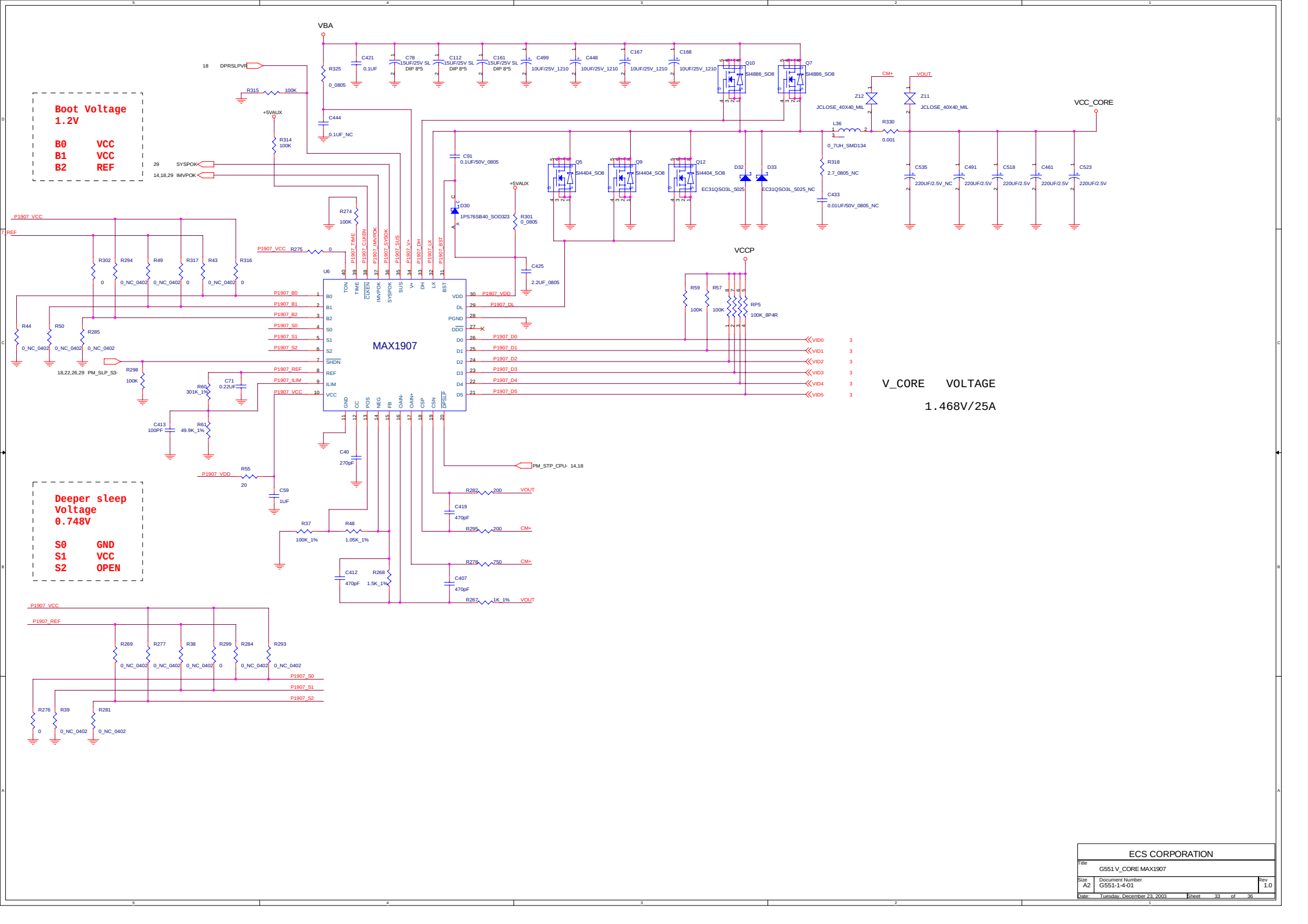
Boot Voltage
1.2V
B0 VCC
B1 VCC
B2 REF
Deeper sleep
Voltage
0.748V
S0 GND
S1 VCC
S2 OPEN
MAX1907
V_CORE VOLTAGE
1.468V/25A
VBA
VCC_CORE
VCCP
+5VAUX
P1907_VCC
P1907_REF
P1907_VDD
SYSPOK
IMVPOK
PM_SLP_S3-
PM_STP_CPU-
VID0
VID1
VID2
VID3
VID4
VID5
VOUT
CM+
JCLOSE_40X40_MIL
SI4886_SO8
SI4404_SO8
EC31QSO3L_5025
EC31QSO3L_5025_NC
1PS76SB40_SOD323
0_7UH_SMD134
220UF/2.5V
220UF/2.5V_NC
ECS CORPORATION
Title
G551 V_CORE MAX1907
Size A2
Document Number G551-1-4-01
Rev 1.0
Date: Tuesday, December 23, 2003
Sheet 33 of 36

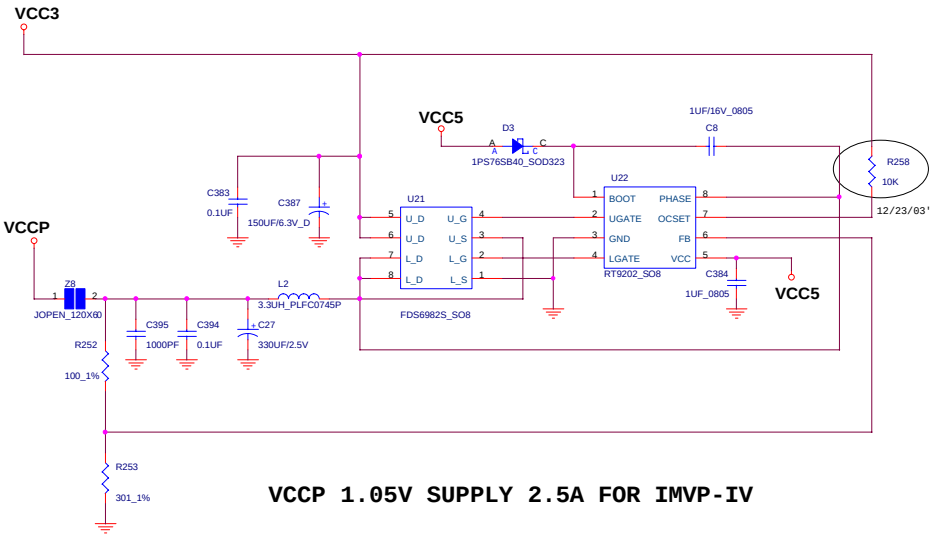

VCCP 1.05V SUPPLY 2.5A FOR IMVP-IV

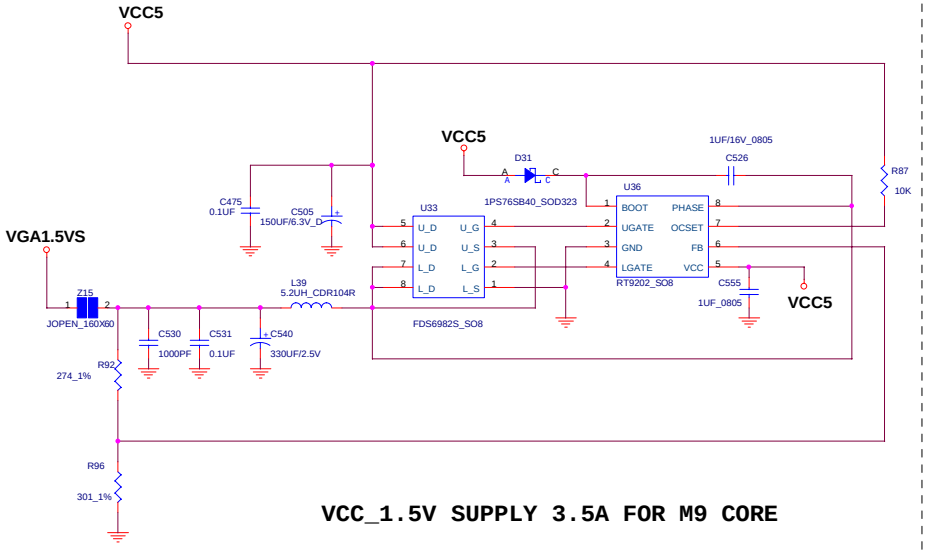

VCC_1.5V SUPPLY 3.5A FOR M9 CORE

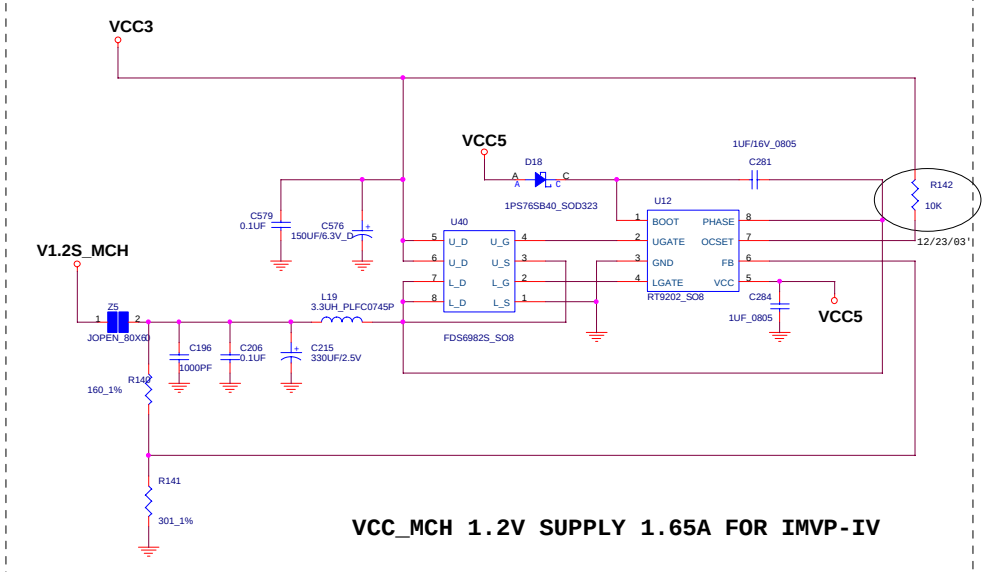

VCC_MCH 1.2V SUPPLY 1.65A FOR IMVP-IV

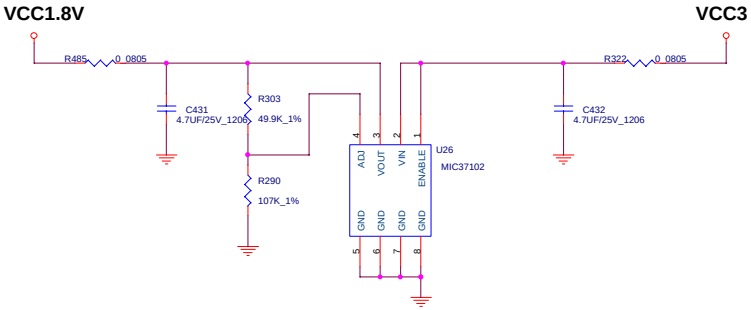

VCC 1.8V SUPPLY 350mA FOR M9

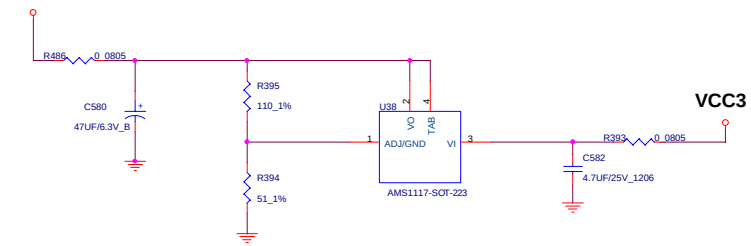

VCC 1.8V SUPPLY FOR CPU & MCH

ECS CORPORATION			
Title	G551 VCCA1.8V/VCCP1.05V/VCC_MCH1.2V		
Size C	Document Number G551-1-4-01		Rev 2C
Date: Wednesday, July 09, 2003	Sheet 34 of 36		

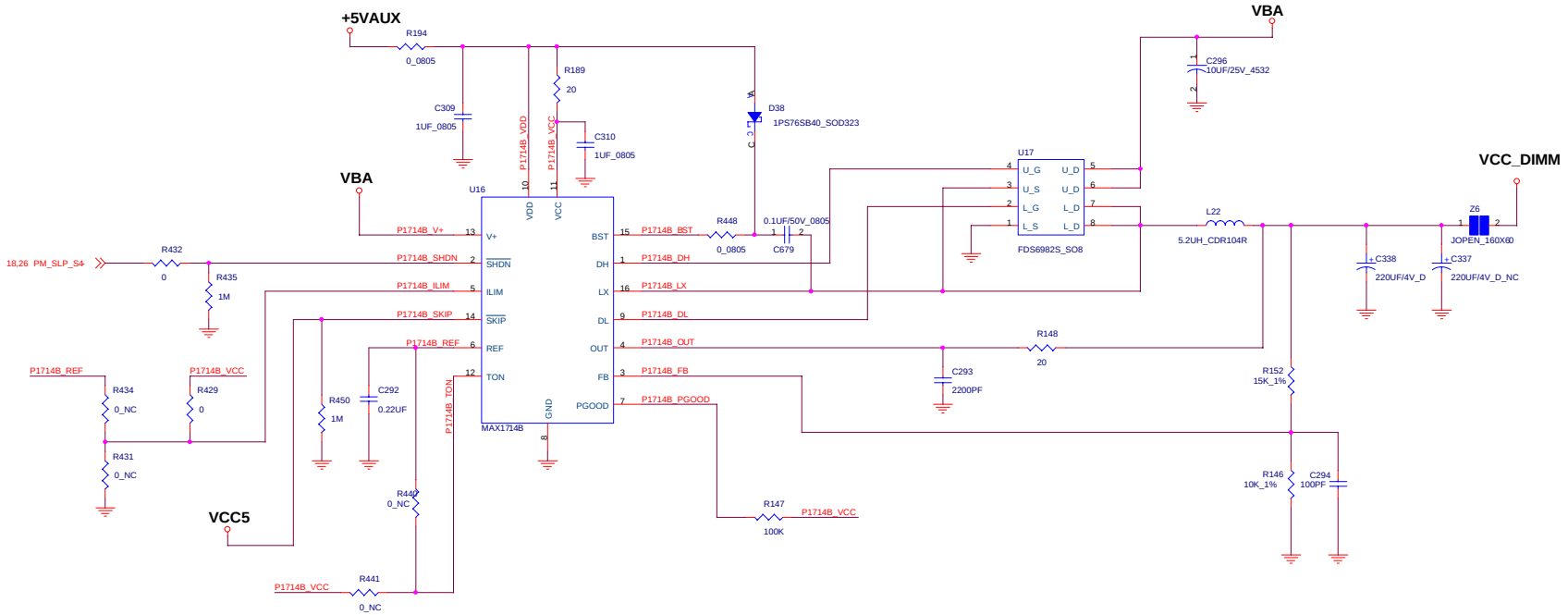

Vi Default : VCC_DIMM

4/22

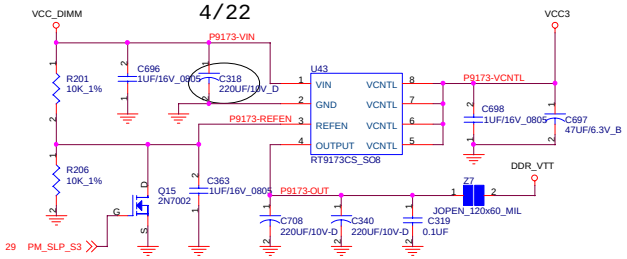

DIMM_2.5V SUPPLY 3.5A & VTT1.25V 1A FOR DDR & M9

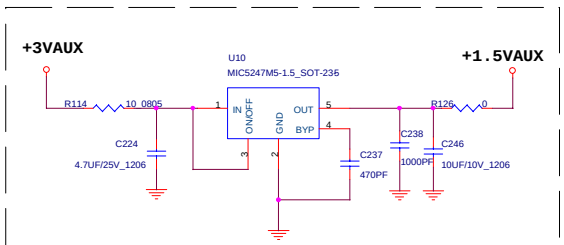

+1.5VAUX SUPPLY 100mA for ICH4-M

ECS CORPORATION		
Title: G551 MAX1714B_DDR2.5 & VTT1.25		
Size: C	Document Number: G551-1-4-01	Rev: 2.0
Date: Tuesday, December 23, 2003	Sheet 35 of 36	

1.0 : Initial Release.

1.A : Fix resume problem for PCMCIA modem card.

Use South Bridge SUS_STAT# pin can control R5C551 HWSUSP# pin but SUS_STAT# pin timing doesn't meet HWSUSP# pin.

Programming GPIO25 to imitate HWSUSP# timing to substitute for SUS_STAT pin.

Delete R100 0 ohm resistor and Add R101 0 ohm resistor.

1.B : To fix no power problem for G551

Solution: To heighten the shock frequency.

Delete C752 10pF capacitor and add C752 33pF capacitor.

1.C : NS 87591 Rev. L shock wrong frequency to result cool boot test fail problem.

Solution: Use capacitor to correct shock frequency.

Delete C752 33pF capacitor and add C752 12pF capacitor.

2.0 : NS 87591 Rev. L shock wrong frequency to result cool boot test fail problem & EMI problem.

Solution: Use CMOS hex inverter IC and EMI spread IC

Delete C681,C318 100UF AND C515,C536 15PF AND R365 1M oh.

Add:U48 4069 IC and u49 P2779A and R500,R501 100 oh
and R515 0 oh and R513,R512 150 oh and R518 33 oh
and C782 0.1uf and C783 270P and 10K.

2.A : VER2.0 EMI SOLUTION (solution : add C283,C172,C178,C564 10PF)

2.B : MODIFY FOR SIS RECOMMAND (DEL R430)

2.C :Fixed PWM IC RT9202 current limit issue

ECS CORPORATION		
Title: G551 M/B		
Size: B	Document Number: G551-1-4-01	Rev: 2.C
Date: Wednesday, July 09, 2003	Sheet 36 of 36	