# G551 Rev 2.A

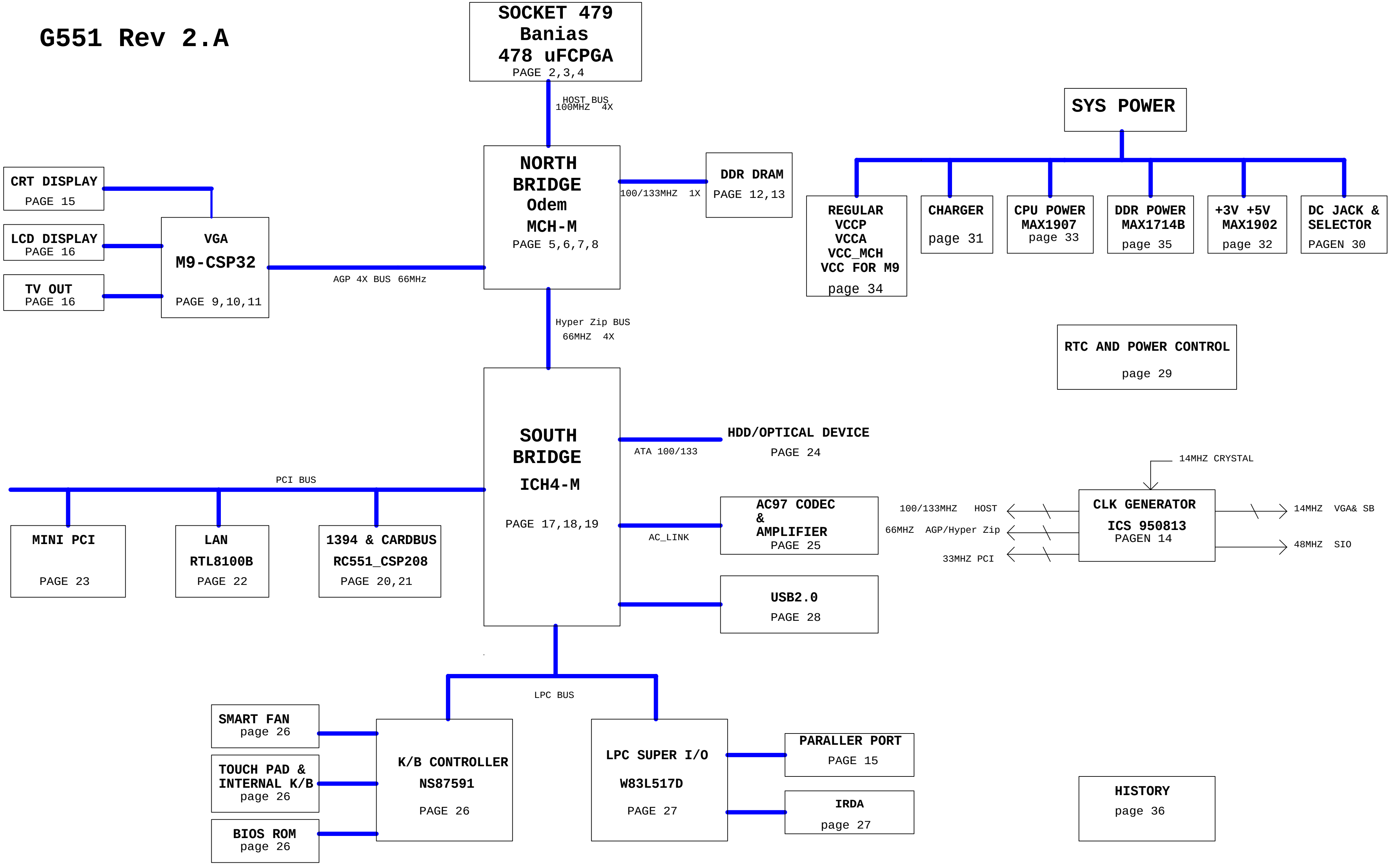
SOCKET 479
Banias
478 uFCPGA
PAGE 2,3,4
HOST BUS
100MHZ 4X
NORTH BRIDGE
Odem
MCH-M
PAGE 5,6,7,8
DDR DRAM
PAGE 12,13
100/133MHZ 1X
CRT DISPLAY
PAGE 15
LCD DISPLAY
PAGE 16
TV OUT
PAGE 16
VGA
M9-CSP32
PAGE 9,10,11
AGP 4X BUS 66MHz
Hyper Zip BUS
66MHZ 4X
SYS POWER
REGULAR
VCCP
VCCA
VCC_MCH
VCC FOR M9
page 34
CHARGER
page 31
CPU POWER
MAX1907
page 33
DDR POWER
MAX1714B
page 35
+3V +5V
MAX1902
page 32
DC JACK &
SELECTOR
PAGEN 30
RTC AND POWER CONTROL
page 29
SOUTH BRIDGE
ICH4-M
PAGE 17,18,19
PCI BUS
MINI PCI
PAGE 23
LAN
RTL8100B
PAGE 22
1394 & CARDBUS
RC551_CSP208
PAGE 20,21
HDD/OPTICAL DEVICE
PAGE 24
ATA 100/133
AC97 CODEC
&
AMPLIFIER
PAGE 25
AC_LINK
USB2.0
PAGE 28
14MHZ CRYSTAL
CLK GENERATOR
ICS 950813
PAGEN 14
100/133MHZ HOST
66MHZ AGP/Hyper Zip
33MHZ PCI
14MHZ VGA& SB
48MHZ SIO
LPC BUS
SMART FAN
page 26
TOUCH PAD &
INTERNAL K/B
page 26
BIOS ROM
page 26
K/B CONTROLLER
NS87591
PAGE 26
LPC SUPER I/O
W83L517D
PAGE 27
PARALLER PORT
PAGE 15
IRDA
page 27
HISTORY
page 36

| PAGE | 1 | 2 | 3 | 4 | 5 | 6 | 7 | 8 | 9 | 10 | 11 | 12 | 13 | 14 | 15 | 16 | 17 | 18 |
|---|---|---|---|---|---|---|---|---|---|---|---|---|---|---|---|---|---|---|
| REV | 2.A | 1.0 | 1.0 | 1.0 | 1.0 | 1.0 | 1.0 | 1.0 | 2.0 | 2.0 | 1.0 | 1.0 | 2.0 | 2.0 | 1.0 | 1.0 | 1.0 | 2.0 |
| DATE | 05/29/2003 | 03/20/2003 | 03/20/2003 | 03/20/2003 | 03/20/2003 | 03/20/2003 | 03/20/2003 | 03/20/2003 | 04/25/2003 | 04/25/2003 | 03/20/2003 | 03/20/2003 | 04/25/2003 | 04/25/2003 | 03/20/2003 | 03/20/2003 | 03/20/2003 | 04/25/2003 |

| PAGE | 19 | 20 | 21 | 22 | 23 | 24 | 25 | 26 | 27 | 28 | 29 | 30 | 31 | 32 | 33 | 34 | 35 | 36 |
|---|---|---|---|---|---|---|---|---|---|---|---|---|---|---|---|---|---|---|
| REV | 1.0 | 2.A | 2.0 | 2.A | 2.0 | 1.0 | 2.A | 2.0 | 1.0 | 1.0 | 1.0 | 1.0 | 1.0 | 1.0 | 1.0 | 1.0 | 2.0 | 2.A |
| DATE | 03/20/2003 | 05/29/2003 | 04/25/2003 | 05/29/2003 | 04/25/2003 | 03/20/2003 | 05/29/2003 | 04/25/2003 | 03/20/2003 | 03/20/2003 | 03/20/2003 | 03/20/2003 | 03/20/2003 | 03/20/2003 | 03/20/2003 | 03/20/2003 | 04/25/2003 | 04/25/2003 |

**P/N : KK0G551011020**

| Approved by | Checked by | Designed by |
|---|---|---|
|  |  |  |

ECS CORPORATION

P.Leader

Title G551 M/B

Size C

Document Number G551-1-4-01

Rev 2.A

Date: Thursday, May 29, 2003

Sheet 1 of 36

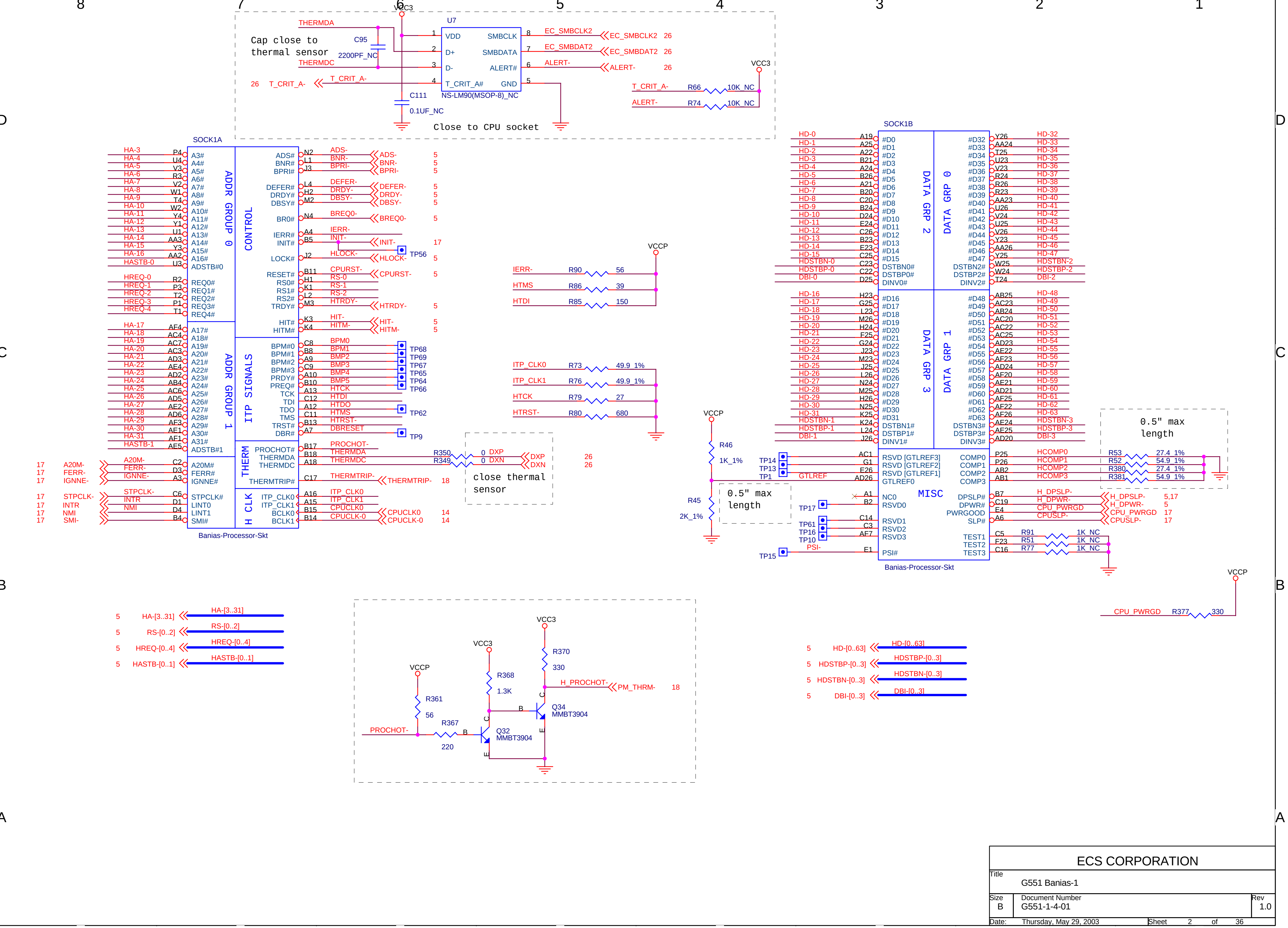
VCC3
U7
THERMDA
THERMDC
Cap close to thermal sensor
C95
2200PF_NC
VDD
D+
D-
T_CRIT_A#
SMBCLK
SMBDATA
ALERT#
GND
NS-LM90(MSOP-8)_NC
EC_SMBCLK2 26
EC_SMBDAT2 26
ALERT- 26
26 T_CRIT_A-
C111
0.1UF_NC
Close to CPU socket
R66 10K_NC
R74 10K_NC
T_CRIT_A-
ALERT-
SOCK1A
ADDR GROUP 0
CONTROL
ADDR GROUP 1
ITP SIGNALS
THERM
H CLK
HA-3 P4 A3#
HA-4 U4 A4#
HA-5 V3 A5#
HA-6 R3 A6#
HA-7 V2 A7#
HA-8 W1 A8#
HA-9 T4 A9#
HA-10 W2 A10#
HA-11 Y4 A11#
HA-12 Y1 A12#
HA-13 U1 A13#
HA-14 AA3 A14#
HA-15 Y3 A15#
HA-16 AA2 A16#
HASTB-0 U3 ADSTB#0
HREQ-0 R2 REQ0#
HREQ-1 P3 REQ1#
HREQ-2 T2 REQ2#
HREQ-3 P1 REQ3#
HREQ-4 T1 REQ4#
HA-17 AF4 A17#
HA-18 AC4 A18#
HA-19 AC7 A19#
HA-20 AC3 A20#
HA-21 AD3 A21#
HA-22 AE4 A22#
HA-23 AD2 A23#
HA-24 AB4 A24#
HA-25 AC6 A25#
HA-26 AD5 A26#
HA-27 AE2 A27#
HA-28 AD6 A28#
HA-29 AF3 A29#
HA-30 AE1 A30#
HA-31 AF1 A31#
HASTB-1 AE5 ADSTB#1
17 A20M- C2 A20M#
17 FERR- D3 FERR#
17 IGNNE- A3 IGNNE#
17 STPCLK- C6 STPCLK#
17 INTR D1 LINT0
17 NMI D4 LINT1
17 SMI- B4 SMI#
ADS# N2 ADS- 5
BNR# L1 BNR- 5
BPRI# J3 BPRI- 5
DEFER# L4 DEFER- 5
DRDY# H2 DRDY- 5
DBSY# M2 DBSY- 5
BR0# N4 BREQ0- 5
IERR# A4 IERR-
INIT# B5 INIT- 17
TP56
LOCK# J2 HLOCK- 5
RESET# B11 CPURST- 5
RS0# H1 RS-0
RS1# K1 RS-1
RS2# L2 RS-2
TRDY# M3 HTRDY- 5
HIT# K3 HIT- 5
HITM# K4 HITM- 5
BPM#0 C8 BPM0 TP68
BPM#1 B8 BPM1 TP69
BPM#2 A9 BMP2 TP67
BPM#3 C9 BMP3 TP65
PRDY# A10 BMP4 TP64
PREQ# B10 BMP5 TP66
TCK A13 HTCK
TDI C12 HTDI
TDO A12 HTDO TP62
TMS C11 HTMS
TRST# B13 HTRST-
DBR# A7 DBRESET TP9
PROCHOT# B17 PROCHOT-
THERMDA B18 THERMDA
THERMDC A18 THERMDC
THERMTRIP# C17 THERMTRIP- 18
ITP_CLK0 A16 ITP_CLK0
ITP_CLK1 A15 ITP_CLK1
BCLK0 B15 CPUCLK0 14
BCLK1 B14 CPUCLK-0 14
Banias-Processor-Skt
R350 0 DXP 26
R349 0 DXN 26
close thermal sensor
VCCP
IERR- R90 56
HTMS R86 39
HTDI R85 150
ITP_CLK0 R73 49.9_1%
ITP_CLK1 R76 49.9_1%
HTCK R79 27
HTRST- R80 680
SOCK1B
DATA GRP 0
DATA GRP 1
DATA GRP 2
DATA GRP 3
MISC
HD-0 A19 #D0
HD-1 A25 #D1
HD-2 A22 #D2
HD-3 B21 #D3
HD-4 A24 #D4
HD-5 B26 #D5
HD-6 A21 #D6
HD-7 B20 #D7
HD-8 C20 #D8
HD-9 B24 #D9
HD-10 D24 #D10
HD-11 E24 #D11
HD-12 C26 #D12
HD-13 B23 #D13
HD-14 E23 #D14
HD-15 C25 #D15
HDSTBN-0 C23 DSTBN0#
HDSTBP-0 C22 DSTBP0#
DBI-0 D25 DINV0#
HD-16 H23 #D16
HD-17 G25 #D17
HD-18 L23 #D18
HD-19 M26 #D19
HD-20 H24 #D20
HD-21 F25 #D21
HD-22 G24 #D22
HD-23 J23 #D23
HD-24 M23 #D24
HD-25 J25 #D25
HD-26 L26 #D26
HD-27 N24 #D27
HD-28 M25 #D28
HD-29 H26 #D29
HD-30 N25 #D30
HD-31 K25 #D31
HDSTBN-1 K24 DSTBN1#
HDSTBP-1 L24 DSTBP1#
DBI-1 J26 DINV1#
#D32 Y26 HD-32
#D33 AA24 HD-33
#D34 T25 HD-34
#D35 U23 HD-35
#D36 V23 HD-36
#D37 R24 HD-37
#D38 R26 HD-38
#D39 R23 HD-39
#D40 AA23 HD-40
#D41 U26 HD-41
#D42 V24 HD-42
#D43 U25 HD-43
#D44 V26 HD-44
#D45 Y23 HD-45
#D46 AA26 HD-46
#D47 Y25 HD-47
DSTBN2# W25 HDSTBN-2
DSTBP2# W24 HDSTBP-2
DINV2# T24 DBI-2
#D48 AB25 HD-48
#D49 AC23 HD-49
#D50 AB24 HD-50
#D51 AC20 HD-51
#D52 AC22 HD-52
#D53 AC25 HD-53
#D54 AD23 HD-54
#D55 AE22 HD-55
#D56 AF23 HD-56
#D57 AD24 HD-57
#D58 AF20 HD-58
#D59 AE21 HD-59
#D60 AD21 HD-60
#D61 AF25 HD-61
#D62 AF22 HD-62
#D63 AF26 HD-63
DSTBN3# AE24 HDSTBN-3
DSTBP3# AE25 HDSTBP-3
DINV3# AD20 DBI-3
TP14 AC1 RSVD [GTLREF3]
TP13 G1 RSVD [GTLREF2]
TP1 E26 RSVD [GTLREF1]
GTLREF AD26 GTLREF0
A1 NC0
TP17 B2 RSVD0
TP61 C14 RSVD1
TP16 C3 RSVD2
TP10 AF7 RSVD3
TP15 PSI- E1 PSI#
COMP0 P25 HCOMP0 R53 27.4_1%
COMP1 P26 HCOMP1 R52 54.9_1%
COMP2 AB2 HCOMP2 R380 27.4_1%
COMP3 AB1 HCOMP3 R381 54.9_1%
0.5" max length
DPSLP# B7 H_DPSLP- 5,17
DPWR# C19 H_DPWR- 5
PWRGOOD E4 CPU_PWRGD 17
SLP# A6 CPUSLP- 17
TEST1 C5 R91 1K_NC
TEST2 F23 R51 1K_NC
TEST3 C16 R77 1K_NC
Banias-Processor-Skt
VCCP
R46 1K_1%
R45 2K_1%
0.5" max length
VCCP
CPU_PWRGD R377 330
5 HA-[3..31] HA-[3..31]
5 RS-[0..2] RS-[0..2]
5 HREQ-[0..4] HREQ-[0..4]
5 HASTB-[0..1] HASTB-[0..1]
5 HD-[0..63] HD-[0..63]
5 HDSTBP-[0..3] HDSTBP-[0..3]
5 HDSTBN-[0..3] HDSTBN-[0..3]
5 DBI-[0..3] DBI-[0..3]
VCC3
R370 330
H_PROCHOT- PM_THRM- 18
Q34 MMBT3904
VCC3
R368 1.3K
VCCP
R361 56
PROCHOT-
R367 220
Q32 MMBT3904
B C E

ECS CORPORATION

Title
G551 Banias-1

| Size | Document Number | Rev |
|---|---|---|
| B | G551-1-4-01 | 1.0 |

Date: Thursday, May 29, 2003 Sheet 2 of 36

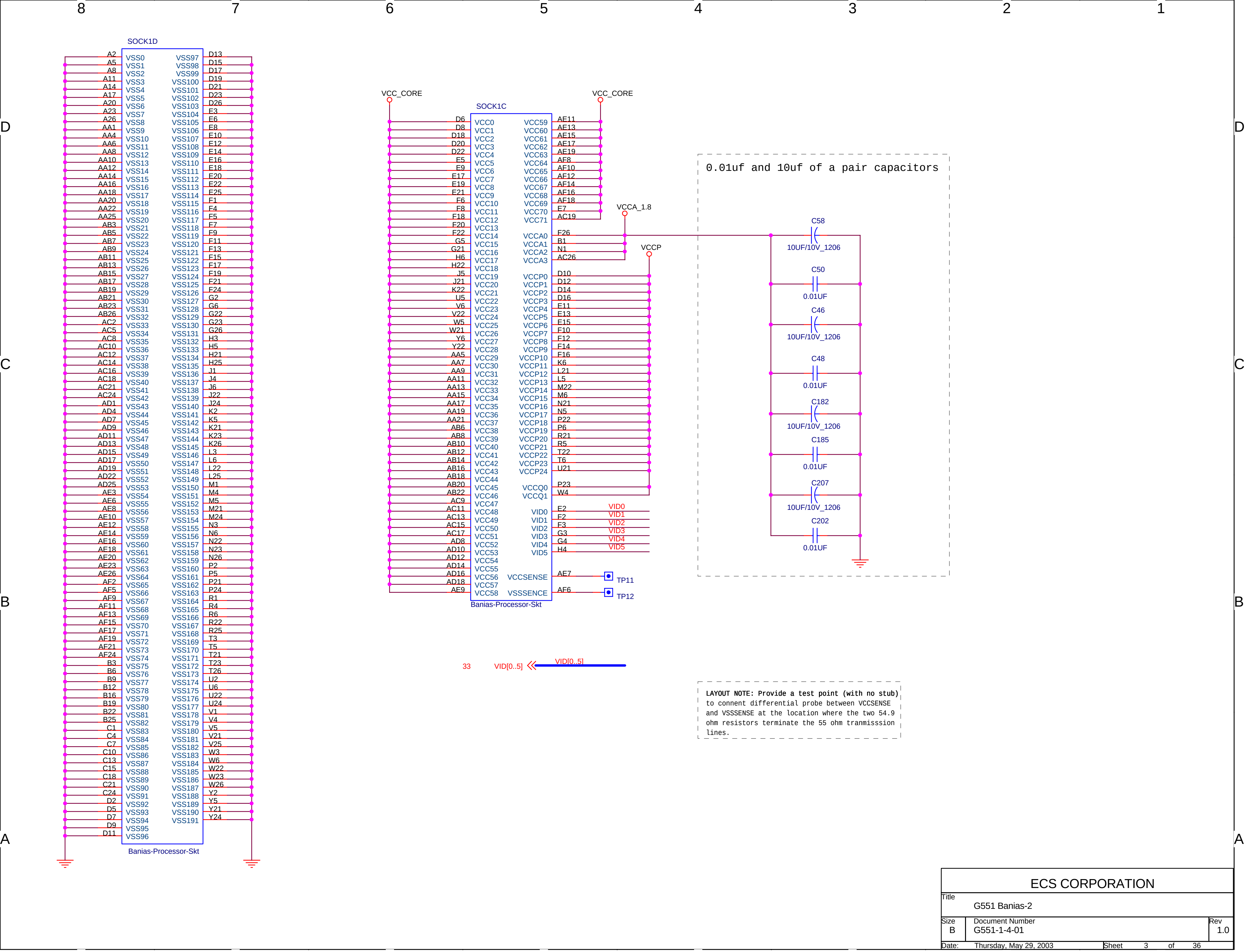
8
7
6
5
4
3
2
1
D
C
B
A
SOCK1D
A2 VSS0
A5 VSS1
A8 VSS2
A11 VSS3
A14 VSS4
A17 VSS5
A20 VSS6
A23 VSS7
A26 VSS8
AA1 VSS9
AA4 VSS10
AA6 VSS11
AA8 VSS12
AA10 VSS13
AA12 VSS14
AA14 VSS15
AA16 VSS16
AA18 VSS17
AA20 VSS18
AA22 VSS19
AA25 VSS20
AB3 VSS21
AB5 VSS22
AB7 VSS23
AB9 VSS24
AB11 VSS25
AB13 VSS26
AB15 VSS27
AB17 VSS28
AB19 VSS29
AB21 VSS30
AB23 VSS31
AB26 VSS32
AC2 VSS33
AC5 VSS34
AC8 VSS35
AC10 VSS36
AC12 VSS37
AC14 VSS38
AC16 VSS39
AC18 VSS40
AC21 VSS41
AC24 VSS42
AD1 VSS43
AD4 VSS44
AD7 VSS45
AD9 VSS46
AD11 VSS47
AD13 VSS48
AD15 VSS49
AD17 VSS50
AD19 VSS51
AD22 VSS52
AD25 VSS53
AE3 VSS54
AE6 VSS55
AE8 VSS56
AE10 VSS57
AE12 VSS58
AE14 VSS59
AE16 VSS60
AE18 VSS61
AE20 VSS62
AE23 VSS63
AE26 VSS64
AF2 VSS65
AF5 VSS66
AF9 VSS67
AF11 VSS68
AF13 VSS69
AF15 VSS70
AF17 VSS71
AF19 VSS72
AF21 VSS73
AF24 VSS74
B3 VSS75
B6 VSS76
B9 VSS77
B12 VSS78
B16 VSS79
B19 VSS80
B22 VSS81
B25 VSS82
C1 VSS83
C4 VSS84
C7 VSS85
C10 VSS86
C13 VSS87
C15 VSS88
C18 VSS89
C21 VSS90
C24 VSS91
D2 VSS92
D5 VSS93
D7 VSS94
D9 VSS95
D11 VSS96
VSS97 D13
VSS98 D15
VSS99 D17
VSS100 D19
VSS101 D21
VSS102 D23
VSS103 D26
VSS104 E3
VSS105 E6
VSS106 E8
VSS107 E10
VSS108 E12
VSS109 E14
VSS110 E16
VSS111 E18
VSS112 E20
VSS113 E22
VSS114 E25
VSS115 F1
VSS116 F4
VSS117 F5
VSS118 F7
VSS119 F9
VSS120 F11
VSS121 F13
VSS122 F15
VSS123 F17
VSS124 F19
VSS125 F21
VSS126 F24
VSS127 G2
VSS128 G6
VSS129 G22
VSS130 G23
VSS131 G26
VSS132 H3
VSS133 H5
VSS134 H21
VSS135 H25
VSS136 J1
VSS137 J4
VSS138 J6
VSS139 J22
VSS140 J24
VSS141 K2
VSS142 K5
VSS143 K21
VSS144 K23
VSS145 K26
VSS146 L3
VSS147 L6
VSS148 L22
VSS149 L25
VSS150 M1
VSS151 M4
VSS152 M5
VSS153 M21
VSS154 M24
VSS155 N3
VSS156 N6
VSS157 N22
VSS158 N23
VSS159 N26
VSS160 P2
VSS161 P5
VSS162 P21
VSS163 P24
VSS164 R1
VSS165 R4
VSS166 R6
VSS167 R22
VSS168 R25
VSS169 T3
VSS170 T5
VSS171 T21
VSS172 T23
VSS173 T26
VSS174 U2
VSS175 U6
VSS176 U22
VSS177 U24
VSS178 V1
VSS179 V4
VSS180 V5
VSS181 V21
VSS182 V25
VSS183 W3
VSS184 W6
VSS185 W22
VSS186 W23
VSS187 W26
VSS188 Y2
VSS189 Y5
VSS190 Y21
VSS191 Y24
Banias-Processor-Skt
VCC_CORE
VCC_CORE
SOCK1C
D6 VCC0
D8 VCC1
D18 VCC2
D20 VCC3
D22 VCC4
E5 VCC5
E9 VCC6
E17 VCC7
E19 VCC8
E21 VCC9
F6 VCC10
F8 VCC11
F18 VCC12
F20 VCC13
F22 VCC14
G5 VCC15
G21 VCC16
H6 VCC17
H22 VCC18
J5 VCC19
J21 VCC20
K22 VCC21
U5 VCC22
V6 VCC23
V22 VCC24
W5 VCC25
W21 VCC26
Y6 VCC27
Y22 VCC28
AA5 VCC29
AA7 VCC30
AA9 VCC31
AA11 VCC32
AA13 VCC33
AA15 VCC34
AA17 VCC35
AA19 VCC36
AA21 VCC37
AB6 VCC38
AB8 VCC39
AB10 VCC40
AB12 VCC41
AB14 VCC42
AB16 VCC43
AB18 VCC44
AB20 VCC45
AB22 VCC46
AC9 VCC47
AC11 VCC48
AC13 VCC49
AC15 VCC50
AC17 VCC51
AD8 VCC52
AD10 VCC53
AD12 VCC54
AD14 VCC55
AD16 VCC56
AD18 VCC57
AE9 VCC58
VCC59 AE11
VCC60 AE13
VCC61 AE15
VCC62 AE17
VCC63 AE19
VCC64 AF8
VCC65 AF10
VCC66 AF12
VCC67 AF14
VCC68 AF16
VCC69 AF18
VCC70 E7
VCC71 AC19
VCCA_1.8
VCCA0 F26
VCCA1 B1
VCCA2 N1
VCCA3 AC26
VCCP
VCCP0 D10
VCCP1 D12
VCCP2 D14
VCCP3 D16
VCCP4 E11
VCCP5 E13
VCCP6 E15
VCCP7 F10
VCCP8 F12
VCCP9 F14
VCCP10 F16
VCCP11 K6
VCCP12 L21
VCCP13 L5
VCCP14 M22
VCCP15 M6
VCCP16 N21
VCCP17 N5
VCCP18 P22
VCCP19 P6
VCCP20 R21
VCCP21 R5
VCCP22 T22
VCCP23 T6
VCCP24 U21
VCCQ0 P23
VCCQ1 W4
VID0 E2 VID0
VID1 F2 VID1
VID2 F3 VID2
VID3 G3 VID3
VID4 G4 VID4
VID5 H4 VID5
VCCSENSE AE7 TP11
VSSSENCE AF6 TP12
Banias-Processor-Skt
33 VID[0..5]
VID[0..5]
0.01uf and 10uf of a pair capacitors
C58
10UF/10V_1206
C50
0.01UF
C46
10UF/10V_1206
C48
0.01UF
C182
10UF/10V_1206
C185
0.01UF
C207
10UF/10V_1206
C202
0.01UF

**LAYOUT NOTE: Provide a test point (with no stub)** to connent differential probe between VCCSENSE and VSSSENSE at the location where the two 54.9 ohm resistors terminate the 55 ohm tranmisssion lines.

| ECS CORPORATION | | |
|---|---|---|
| Title | G551 Banias-2 | |
| Size<br>B | Document Number<br>G551-1-4-01 | Rev<br>1.0 |
| Date: Thursday, May 29, 2003 | Sheet 3 of 36 | |

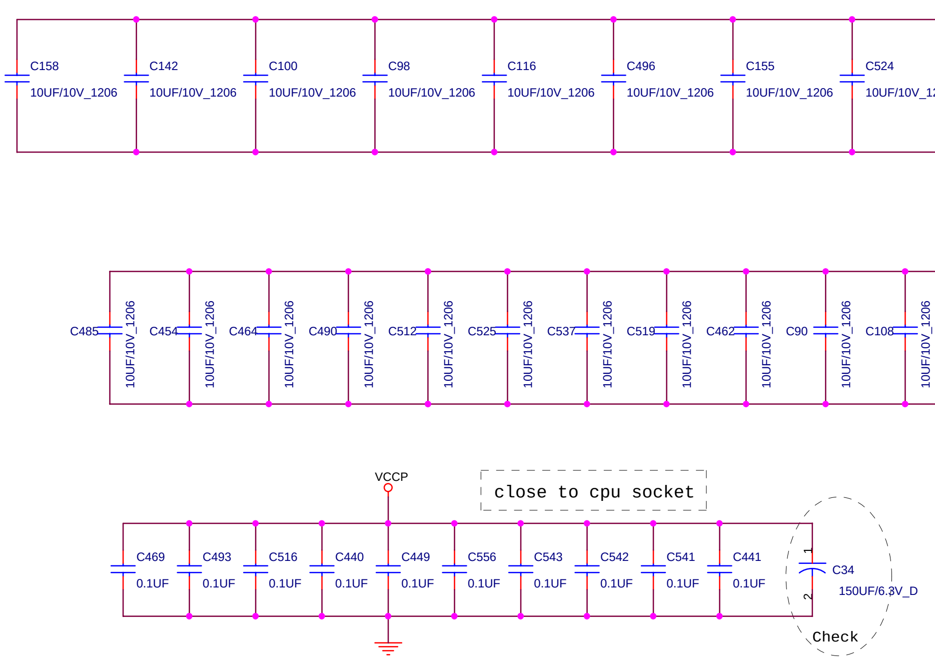
VCC_CORE
C158 10UF/10V_1206
C142 10UF/10V_1206
C100 10UF/10V_1206
C98 10UF/10V_1206
C116 10UF/10V_1206
C496 10UF/10V_1206
C155 10UF/10V_1206
C524 10UF/10V_1206
C511 10UF/10V_1206
C436 10UF/10V_1206
C529 10UF/10V_1206
C510 10UF/10V_1206
C447 10UF/10V_1206
C484 10UF/10V_1206
C483 10UF/10V_1206
VCC_CORE
C485 10UF/10V_1206
C454 10UF/10V_1206
C464 10UF/10V_1206
C490 10UF/10V_1206
C512 10UF/10V_1206
C525 10UF/10V_1206
C537 10UF/10V_1206
C519 10UF/10V_1206
C462 10UF/10V_1206
C90 10UF/10V_1206
C108 10UF/10V_1206
C120 10UF/10V_1206
C147 10UF/10V_1206
C160 10UF/10V_1206
C99 10UF/10V_1206
C446 10UF/10V_1206
C170 10UF/10V_1206
C132 10UF/10V_1206
C141 10UF/10V_1206
C156 10UF/10V_1206
VCCP
close to cpu socket
C469 0.1UF
C493 0.1UF
C516 0.1UF
C440 0.1UF
C449 0.1UF
C556 0.1UF
C543 0.1UF
C542 0.1UF
C541 0.1UF
C441 0.1UF
1
2
C34
150UF/6.3V_D
Check

ECS CORPORATION

Title
G551 Banias-3

Size B
Document Number G551-1-4-01
Rev 1.0

Date: Thursday, May 29, 2003
Sheet 4 of 36

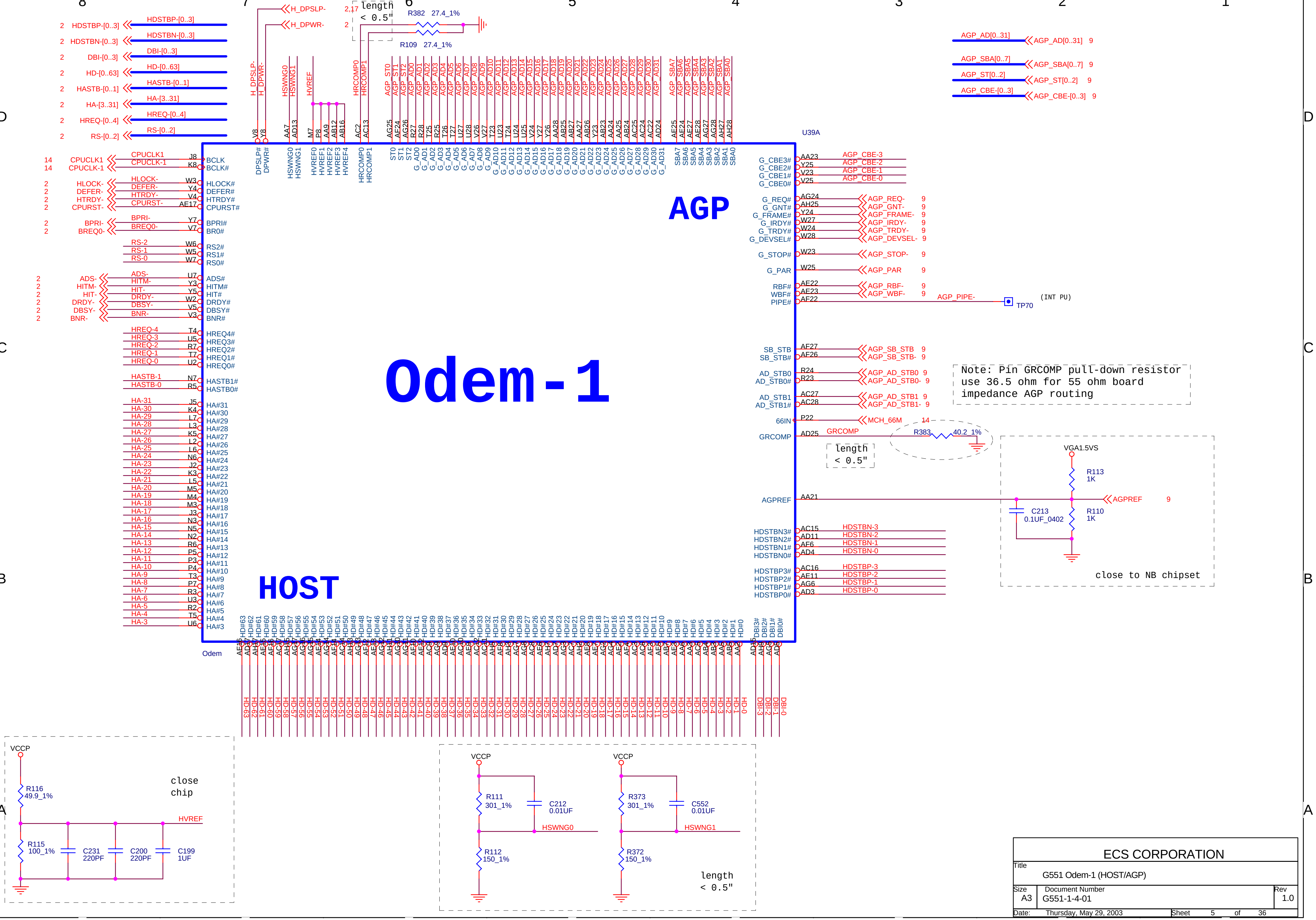
Odem-1
AGP
HOST
U39A
Odem
HDSTBP-[0..3]
HDSTBN-[0..3]
DBI-[0..3]
HD-[0..63]
HASTB-[0..1]
HA-[3..31]
HREQ-[0..4]
RS-[0..2]
H_DPSLP-
H_DPWR-
R382 27.4_1%
R109 27.4_1%
AGP_AD[0..31]
AGP_SBA[0..7]
AGP_ST[0..2]
AGP_CBE-[0..3]
CPUCLK1
CPUCLK-1
HLOCK-
DEFER-
HTRDY-
CPURST-
BPRI-
BREQ0-
ADS-
HITM-
HIT-
DRDY-
DBSY-
BNR-
BCLK
BCLK#
HLOCK#
DEFER#
HTRDY#
CPURST#
BPRI#
BR0#
RS2#
RS1#
RS0#
ADS#
HITM#
HIT#
DRDY#
DBSY#
BNR#
HREQ4#
HREQ3#
HREQ2#
HREQ1#
HREQ0#
HASTB1#
HASTB0#
DPSLP#
DPWR#
HSWNG0
HSWNG1
HVREF0
HVREF1
HVREF2
HVREF3
HVREF4
HRCOMP0
HRCOMP1
G_CBE3#
G_CBE2#
G_CBE1#
G_CBE0#
G_REQ#
G_GNT#
G_FRAME#
G_IRDY#
G_TRDY#
G_DEVSEL#
G_STOP#
G_PAR
RBF#
WBF#
PIPE#
AGP_REQ-
AGP_GNT-
AGP_FRAME-
AGP_IRDY-
AGP_TRDY-
AGP_DEVSEL-
AGP_STOP-
AGP_PAR
AGP_RBF-
AGP_WBF-
AGP_PIPE-
TP70
(INT PU)
SB_STB
SB_STB#
AD_STB0
AD_STB0#
AD_STB1
AD_STB1#
66IN
GRCOMP
AGP_SB_STB
AGP_SB_STB-
AGP_AD_STB0
AGP_AD_STB0-
AGP_AD_STB1
AGP_AD_STB1-
MCH_66M
R383 40.2_1%
AGPREF
VGA1.5VS
R113 1K
R110 1K
C213 0.1UF_0402
HDSTBN3#
HDSTBN2#
HDSTBN1#
HDSTBN0#
HDSTBP3#
HDSTBP2#
HDSTBP1#
HDSTBP0#
VCCP
R116 49.9_1%
R115 100_1%
C231 220PF
C200 220PF
C199 1UF
HVREF
R111 301_1%
R112 150_1%
C212 0.01UF
HSWNG0
R373 301_1%
R372 150_1%
C552 0.01UF
HSWNG1

length < 0.5"

Note: Pin GRCOMP pull-down resistor use 36.5 ohm for 55 ohm board impedance AGP routing

length < 0.5"

close to NB chipset

close chip

length < 0.5"

ECS CORPORATION

Title
G551 Odem-1 (HOST/AGP)

| Size | Document Number | Rev |
|---|---|---|
| A3 | G551-1-4-01 | 1.0 |

Date: Thursday, May 29, 2003 Sheet 5 of 36

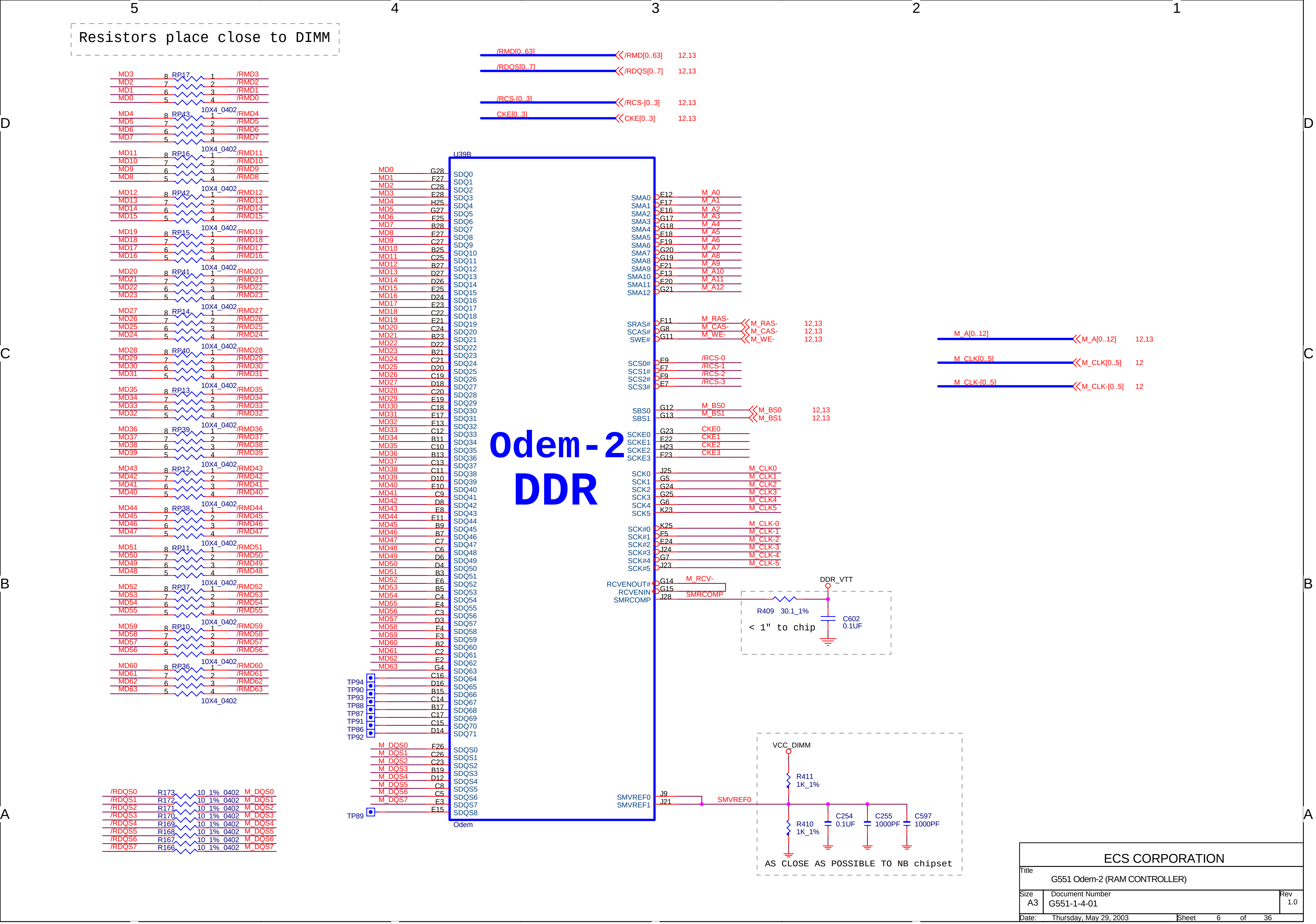
5
4
3
2
1
D
C
B
A
Resistors place close to DIMM
MD3 8 RP17 1 /RMD3
MD2 7 2 /RMD2
MD1 6 3 /RMD1
MD0 5 4 /RMD0
10X4_0402
MD4 8 RP43 1 /RMD4
MD5 7 2 /RMD5
MD6 6 3 /RMD6
MD7 5 4 /RMD7
10X4_0402
MD11 8 RP16 1 /RMD11
MD10 7 2 /RMD10
MD9 6 3 /RMD9
MD8 5 4 /RMD8
10X4_0402
MD12 8 RP42 1 /RMD12
MD13 7 2 /RMD13
MD14 6 3 /RMD14
MD15 5 4 /RMD15
10X4_0402
MD19 8 RP15 1 /RMD19
MD18 7 2 /RMD18
MD17 6 3 /RMD17
MD16 5 4 /RMD16
10X4_0402
MD20 8 RP41 1 /RMD20
MD21 7 2 /RMD21
MD22 6 3 /RMD22
MD23 5 4 /RMD23
10X4_0402
MD27 8 RP14 1 /RMD27
MD26 7 2 /RMD26
MD25 6 3 /RMD25
MD24 5 4 /RMD24
10X4_0402
MD28 8 RP40 1 /RMD28
MD29 7 2 /RMD29
MD30 6 3 /RMD30
MD31 5 4 /RMD31
10X4_0402
MD35 8 RP13 1 /RMD35
MD34 7 2 /RMD34
MD33 6 3 /RMD33
MD32 5 4 /RMD32
10X4_0402
MD36 8 RP39 1 /RMD36
MD37 7 2 /RMD37
MD38 6 3 /RMD38
MD39 5 4 /RMD39
10X4_0402
MD43 8 RP12 1 /RMD43
MD42 7 2 /RMD42
MD41 6 3 /RMD41
MD40 5 4 /RMD40
10X4_0402
MD44 8 RP38 1 /RMD44
MD45 7 2 /RMD45
MD46 6 3 /RMD46
MD47 5 4 /RMD47
10X4_0402
MD51 8 RP11 1 /RMD51
MD50 7 2 /RMD50
MD49 6 3 /RMD49
MD48 5 4 /RMD48
10X4_0402
MD52 8 RP37 1 /RMD52
MD53 7 2 /RMD53
MD54 6 3 /RMD54
MD55 5 4 /RMD55
10X4_0402
MD59 8 RP10 1 /RMD59
MD58 7 2 /RMD58
MD57 6 3 /RMD57
MD56 5 4 /RMD56
10X4_0402
MD60 8 RP36 1 /RMD60
MD61 7 2 /RMD61
MD62 6 3 /RMD62
MD63 5 4 /RMD63
10X4_0402
/RDQS0 R173 10_1%_0402 M_DQS0
/RDQS1 R172 10_1%_0402 M_DQS1
/RDQS2 R171 10_1%_0402 M_DQS2
/RDQS3 R170 10_1%_0402 M_DQS3
/RDQS4 R169 10_1%_0402 M_DQS4
/RDQS5 R168 10_1%_0402 M_DQS5
/RDQS6 R167 10_1%_0402 M_DQS6
/RDQS7 R166 10_1%_0402 M_DQS7
/RMD[0..63] /RMD[0..63] 12,13
/RDQS[0..7] /RDQS[0..7] 12,13
/RCS-[0..3] /RCS-[0..3] 12,13
CKE[0..3] CKE[0..3] 12,13
U39B
Odem-2
DDR
Odem
MD0 G28 SDQ0
MD1 F27 SDQ1
MD2 C28 SDQ2
MD3 E28 SDQ3
MD4 H25 SDQ4
MD5 G27 SDQ5
MD6 F25 SDQ6
MD7 B28 SDQ7
MD8 E27 SDQ8
MD9 C27 SDQ9
MD10 B25 SDQ10
MD11 C25 SDQ11
MD12 B27 SDQ12
MD13 D27 SDQ13
MD14 D26 SDQ14
MD15 E25 SDQ15
MD16 D24 SDQ16
MD17 E23 SDQ17
MD18 C22 SDQ18
MD19 E21 SDQ19
MD20 C24 SDQ20
MD21 B23 SDQ21
MD22 D22 SDQ22
MD23 B21 SDQ23
MD24 C21 SDQ24
MD25 D20 SDQ25
MD26 C19 SDQ26
MD27 D18 SDQ27
MD28 C20 SDQ28
MD29 E19 SDQ29
MD30 C18 SDQ30
MD31 E17 SDQ31
MD32 E13 SDQ32
MD33 C12 SDQ33
MD34 B11 SDQ34
MD35 C10 SDQ35
MD36 B13 SDQ36
MD37 C13 SDQ37
MD38 C11 SDQ38
MD39 D10 SDQ39
MD40 E10 SDQ40
MD41 C9 SDQ41
MD42 D8 SDQ42
MD43 E8 SDQ43
MD44 E11 SDQ44
MD45 B9 SDQ45
MD46 B7 SDQ46
MD47 C7 SDQ47
MD48 C6 SDQ48
MD49 D6 SDQ49
MD50 D4 SDQ50
MD51 B3 SDQ51
MD52 E6 SDQ52
MD53 B5 SDQ53
MD54 C4 SDQ54
MD55 E4 SDQ55
MD56 C3 SDQ56
MD57 D3 SDQ57
MD58 F4 SDQ58
MD59 F3 SDQ59
MD60 B2 SDQ60
MD61 C2 SDQ61
MD62 E2 SDQ62
MD63 G4 SDQ63
TP94 C16 SDQ64
TP90 D16 SDQ65
TP93 B15 SDQ66
TP88 C14 SDQ67
TP87 B17 SDQ68
TP91 C15 SDQ69
TP86 D14 SDQ70
TP92 SDQ71
M_DQS0 F26 SDQS0
M_DQS1 C26 SDQS1
M_DQS2 C23 SDQS2
M_DQS3 B19 SDQS3
M_DQS4 D12 SDQS4
M_DQS5 C8 SDQS5
M_DQS6 C5 SDQS6
M_DQS7 E3 SDQS7
TP89 E15 SDQS8
SMA0 E12 M_A0
SMA1 F17 M_A1
SMA2 E16 M_A2
SMA3 G17 M_A3
SMA4 G18 M_A4
SMA5 E18 M_A5
SMA6 F19 M_A6
SMA7 G20 M_A7
SMA8 G19 M_A8
SMA9 F21 M_A9
SMA10 F13 M_A10
SMA11 E20 M_A11
SMA12 G21 M_A12
SRAS# F11 M_RAS- M_RAS- 12,13
SCAS# G8 M_CAS- M_CAS- 12,13
SWE# G11 M_WE- M_WE- 12,13
SCS0# E9 /RCS-0
SCS1# F7 /RCS-1
SCS2# F9 /RCS-2
SCS3# E7 /RCS-3
SBS0 G12 M_BS0 M_BS0 12,13
SBS1 G13 M_BS1 M_BS1 12,13
SCKE0 G23 CKE0
SCKE1 F22 CKE1
SCKE2 H23 CKE2
SCKE3 F23 CKE3
SCK0 J25 M_CLK0
SCK1 G5 M_CLK1
SCK2 G24 M_CLK2
SCK3 G25 M_CLK3
SCK4 G6 M_CLK4
SCK5 K23 M_CLK5
SCK#0 K25 M_CLK-0
SCK#1 F5 M_CLK-1
SCK#2 E24 M_CLK-2
SCK#3 J24 M_CLK-3
SCK#4 G7 M_CLK-4
SCK#5 J23 M_CLK-5
RCVENOUT# G14 M_RCV-
RCVENIN G15
SMRCOMP J28 SMRCOMP
DDR_VTT
R409 30.1_1%
C602 0.1UF
< 1" to chip
SMVREF0 J9
SMVREF1 J21
SMVREF0
VCC_DIMM
R411 1K_1%
R410 1K_1%
C254 0.1UF
C255 1000PF
C597 1000PF
AS CLOSE AS POSSIBLE TO NB chipset
M_A[0..12] M_A[0..12] 12,13
M_CLK[0..5] M_CLK[0..5] 12
M_CLK-[0..5] M_CLK-[0..5] 12

| ECS CORPORATION | | |
|---|---|---|
| Title | G551 Odem-2 (RAM CONTROLLER) | |
| Size A3 | Document Number G551-1-4-01 | Rev 1.0 |
| Date: Thursday, May 29, 2003 | Sheet 6 of 36 | |

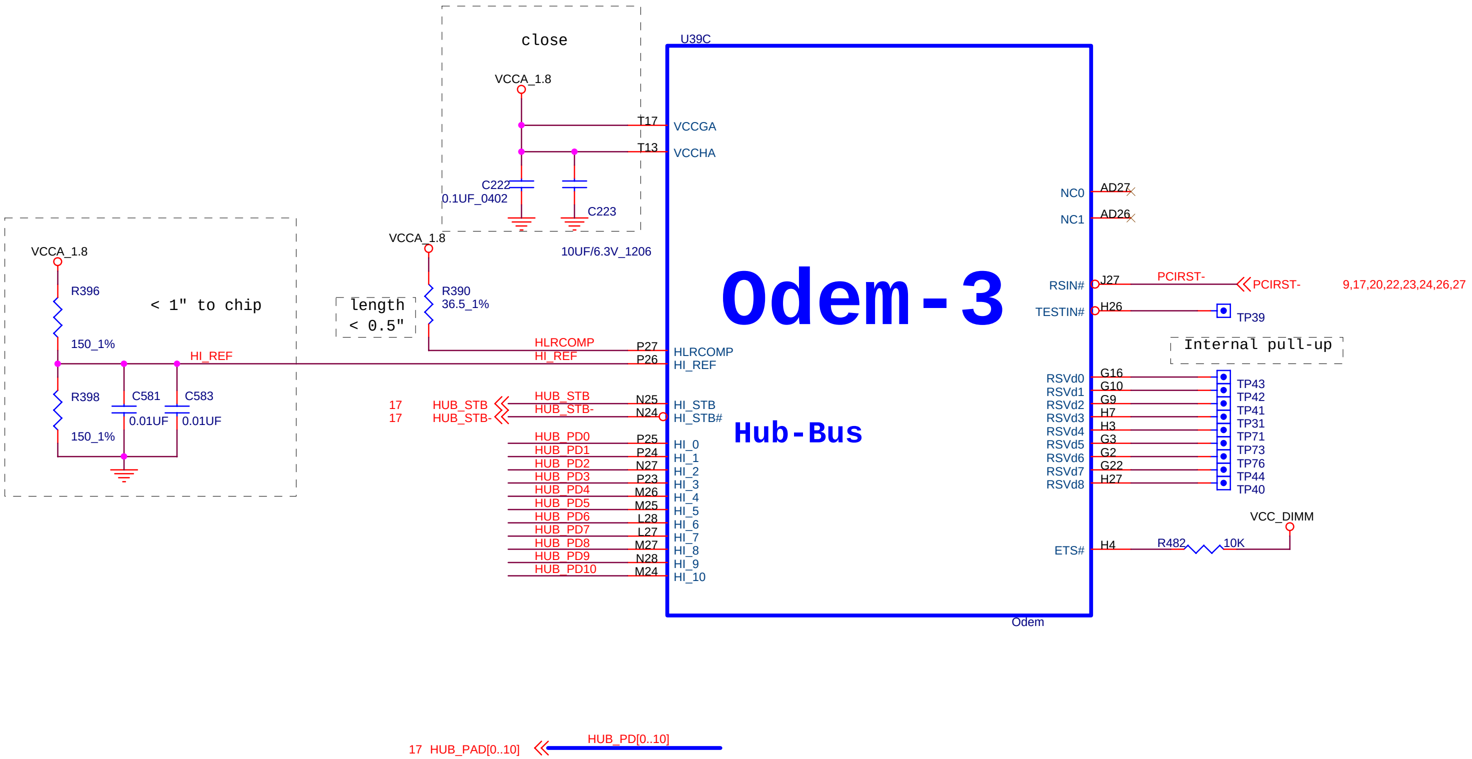
close
VCCA_1.8
T17
VCCGA
T13
VCCHA
C222
0.1UF_0402
C223
10UF/6.3V_1206
U39C
Odem-3
Hub-Bus
Odem
VCCA_1.8
R396
150_1%
< 1" to chip
HI_REF
R398
150_1%
C581
0.01UF
C583
0.01UF
VCCA_1.8
R390
36.5_1%
length
< 0.5"
HLRCOMP
P27
HLRCOMP
HI_REF
P26
HI_REF
17 HUB_STB
17 HUB_STB-
HUB_STB
N25
HI_STB
HUB_STB-
N24
HI_STB#
HUB_PD0 P25 HI_0
HUB_PD1 P24 HI_1
HUB_PD2 N27 HI_2
HUB_PD3 P23 HI_3
HUB_PD4 M26 HI_4
HUB_PD5 M25 HI_5
HUB_PD6 L28 HI_6
HUB_PD7 L27 HI_7
HUB_PD8 M27 HI_8
HUB_PD9 N28 HI_9
HUB_PD10 M24 HI_10
NC0 AD27
NC1 AD26
RSIN# J27
PCIRST-
PCIRST-
9,17,20,22,23,24,26,27
TESTIN# H26
TP39
Internal pull-up
RSVd0 G16 TP43
RSVd1 G10 TP42
RSVd2 G9 TP41
RSVd3 H7 TP31
RSVd4 H3 TP71
RSVd5 G3 TP73
RSVd6 G2 TP76
RSVd7 G22 TP44
RSVd8 H27 TP40
VCC_DIMM
ETS# H4
R482
10K
HUB_PD[0..10]
17 HUB_PAD[0..10]

ECS CORPORATION

Title
G551 Odem-3 (HYPERZIP/VGA)

Size B
Document Number G551-1-4-01
Rev 1.0

Date: Thursday, May 29, 2003
Sheet 7 of 36

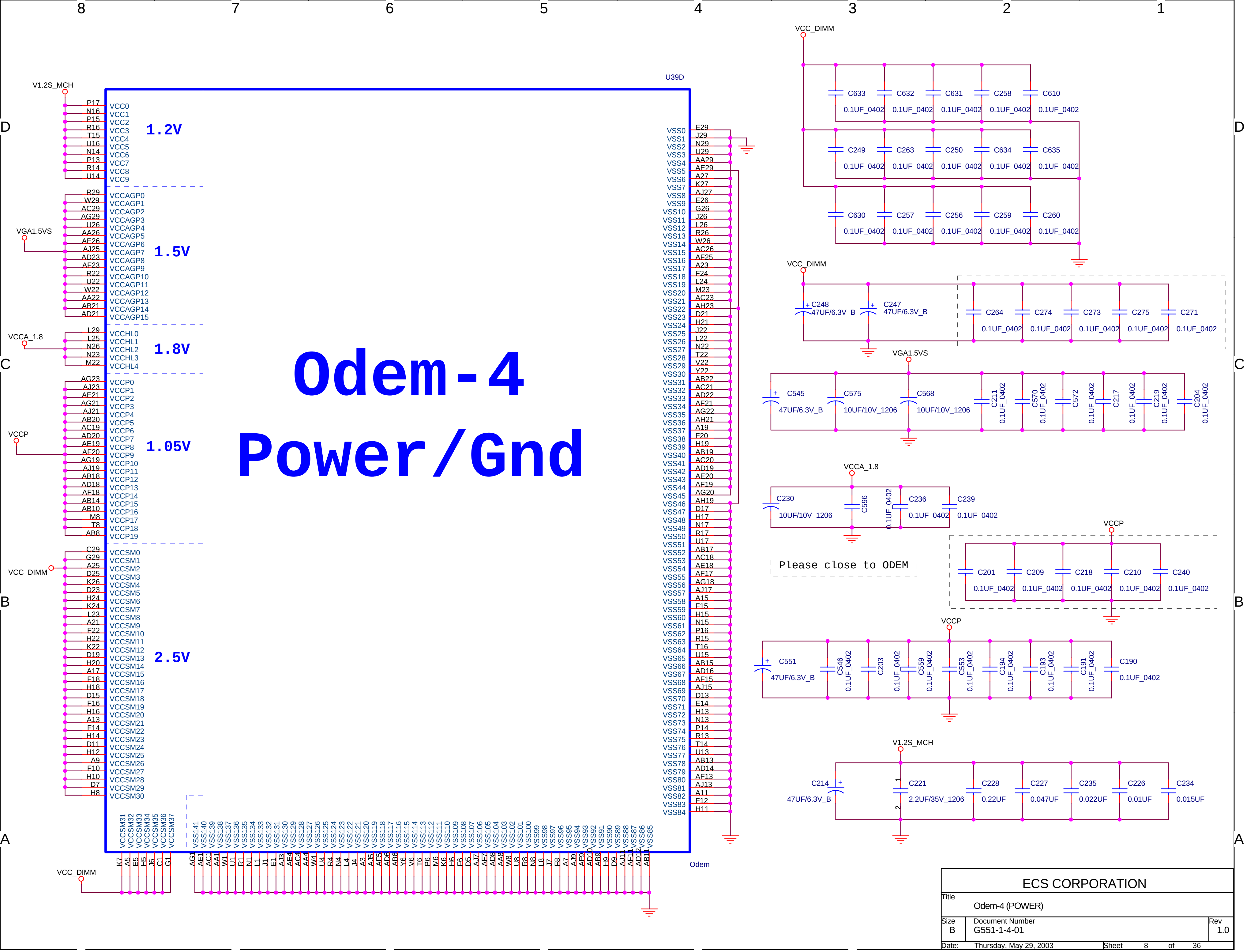
8
7
6
5
4
3
2
1
D
C
B
A
U39D
Odem
Odem-4
Power/Gnd
1.2V
1.5V
1.8V
1.05V
2.5V
V1.2S_MCH
P17 VCC0
N16 VCC1
P15 VCC2
R16 VCC3
T15 VCC4
U16 VCC5
N14 VCC6
P13 VCC7
R14 VCC8
U14 VCC9
VGA1.5VS
R29 VCCAGP0
W29 VCCAGP1
AC29 VCCAGP2
AG29 VCCAGP3
U26 VCCAGP4
AA26 VCCAGP5
AE26 VCCAGP6
AJ25 VCCAGP7
AD23 VCCAGP8
AF23 VCCAGP9
R22 VCCAGP10
U22 VCCAGP11
W22 VCCAGP12
AA22 VCCAGP13
AB21 VCCAGP14
AD21 VCCAGP15
VCCA_1.8
L29 VCCHL0
L25 VCCHL1
N26 VCCHL2
N23 VCCHL3
M22 VCCHL4
VCCP
AG23 VCCP0
AJ23 VCCP1
AE21 VCCP2
AG21 VCCP3
AJ21 VCCP4
AB20 VCCP5
AC19 VCCP6
AD20 VCCP7
AE19 VCCP8
AF20 VCCP9
AG19 VCCP10
AJ19 VCCP11
AB18 VCCP12
AD18 VCCP13
AF18 VCCP14
AB14 VCCP15
AB10 VCCP16
M8 VCCP17
T8 VCCP18
AB8 VCCP19
VCC_DIMM
C29 VCCSM0
G29 VCCSM1
A25 VCCSM2
D25 VCCSM3
K26 VCCSM4
D23 VCCSM5
H24 VCCSM6
K24 VCCSM7
L23 VCCSM8
A21 VCCSM9
F22 VCCSM10
H22 VCCSM11
K22 VCCSM12
D19 VCCSM13
H20 VCCSM14
A17 VCCSM15
F18 VCCSM16
H18 VCCSM17
D15 VCCSM18
F16 VCCSM19
H16 VCCSM20
A13 VCCSM21
F14 VCCSM22
H14 VCCSM23
D11 VCCSM24
H12 VCCSM25
A9 VCCSM26
F10 VCCSM27
H10 VCCSM28
D7 VCCSM29
H8 VCCSM30
VCC_DIMM
K7 VCCSM31
A5 VCCSM32
E5 VCCSM33
H5 VCCSM34
J6 VCCSM35
C1 VCCSM36
G1 VCCSM37
AG1 VSS141
AE1 VSS140
AC1 VSS139
AA1 VSS138
W1 VSS137
U1 VSS136
R1 VSS135
N1 VSS134
L1 VSS133
J1 VSS132
E1 VSS131
AJ3 VSS130
AE4 VSS129
AC4 VSS128
AA4 VSS127
W4 VSS126
U4 VSS125
R4 VSS124
N4 VSS123
L4 VSS122
J4 VSS121
A3 VSS120
AJ5 VSS119
AF5 VSS118
AD6 VSS117
AB6 VSS116
Y6 VSS115
V6 VSS114
T6 VSS113
P6 VSS112
M6 VSS111
K6 VSS110
H6 VSS109
F6 VSS108
D5 VSS107
AJ7 VSS106
AF7 VSS105
AD8 VSS104
AA8 VSS103
W8 VSS102
U8 VSS101
R8 VSS100
N8 VSS99
L8 VSS98
J7 VSS97
F8 VSS96
A7 VSS95
AJ9 VSS94
AF9 VSS93
AD10 VSS92
AB9 VSS91
H9 VSS90
D9 VSS89
AJ11 VSS88
AF11 VSS87
AD12 VSS86
AB11 VSS85
VSS0 E29
VSS1 J29
VSS2 N29
VSS3 U29
VSS4 AA29
VSS5 AE29
VSS6 A27
VSS7 K27
VSS8 AJ27
VSS9 E26
VSS10 G26
VSS11 J26
VSS12 L26
VSS13 R26
VSS14 W26
VSS15 AC26
VSS16 AF25
VSS17 A23
VSS18 F24
VSS19 L24
VSS20 M23
VSS21 AC23
VSS22 AH23
VSS23 D21
VSS24 H21
VSS25 J22
VSS26 L22
VSS27 N22
VSS28 T22
VSS29 V22
VSS30 Y22
VSS31 AB22
VSS32 AC21
VSS33 AD22
VSS34 AF21
VSS35 AG22
VSS36 AH21
VSS37 A19
VSS38 F20
VSS39 H19
VSS40 AB19
VSS41 AC20
VSS42 AD19
VSS43 AE20
VSS44 AF19
VSS45 AG20
VSS46 AH19
VSS47 D17
VSS48 H17
VSS49 N17
VSS50 R17
VSS51 U17
VSS52 AB17
VSS53 AC18
VSS54 AE18
VSS55 AF17
VSS56 AG18
VSS57 AJ17
VSS58 A15
VSS59 F15
VSS60 H15
VSS61 N15
VSS62 P16
VSS63 R15
VSS64 T16
VSS65 U15
VSS66 AB15
VSS67 AD16
VSS68 AF15
VSS69 AJ15
VSS70 D13
VSS71 E14
VSS72 H13
VSS73 N13
VSS74 P14
VSS75 R13
VSS76 T14
VSS77 U13
VSS78 AB13
VSS79 AD14
VSS80 AF13
VSS81 AJ13
VSS82 A11
VSS83 F12
VSS84 H11
VCC_DIMM
C633 0.1UF_0402
C632 0.1UF_0402
C631 0.1UF_0402
C258 0.1UF_0402
C610 0.1UF_0402
C249 0.1UF_0402
C263 0.1UF_0402
C250 0.1UF_0402
C634 0.1UF_0402
C635 0.1UF_0402
C630 0.1UF_0402
C257 0.1UF_0402
C256 0.1UF_0402
C259 0.1UF_0402
C260 0.1UF_0402
VCC_DIMM
C248 47UF/6.3V_B
C247 47UF/6.3V_B
C264 0.1UF_0402
C274 0.1UF_0402
C273 0.1UF_0402
C275 0.1UF_0402
C271 0.1UF_0402
VGA1.5VS
C545 47UF/6.3V_B
C575 10UF/10V_1206
C568 10UF/10V_1206
C211 0.1UF_0402
C570 0.1UF_0402
C572 0.1UF_0402
C217 0.1UF_0402
C219 0.1UF_0402
C204 0.1UF_0402
VCCA_1.8
C230 10UF/10V_1206
C596 0.1UF_0402
C236 0.1UF_0402
C239 0.1UF_0402
Please close to ODEM
VCCP
C201 0.1UF_0402
C209 0.1UF_0402
C218 0.1UF_0402
C210 0.1UF_0402
C240 0.1UF_0402
VCCP
C551 47UF/6.3V_B
C546 0.1UF_0402
C203 0.1UF_0402
C559 0.1UF_0402
C553 0.1UF_0402
C194 0.1UF_0402
C193 0.1UF_0402
C191 0.1UF_0402
C190 0.1UF_0402
V1.2S_MCH
C214 47UF/6.3V_B
1
2
C221 2.2UF/35V_1206
C228 0.22UF
C227 0.047UF
C235 0.022UF
C226 0.01UF
C234 0.015UF

ECS CORPORATION

Title
Odem-4 (POWER)

| Size | Document Number | Rev |
|---|---|---|
| B | G551-1-4-01 | 1.0 |

Date: Thursday, May 29, 2003 Sheet 8 of 36

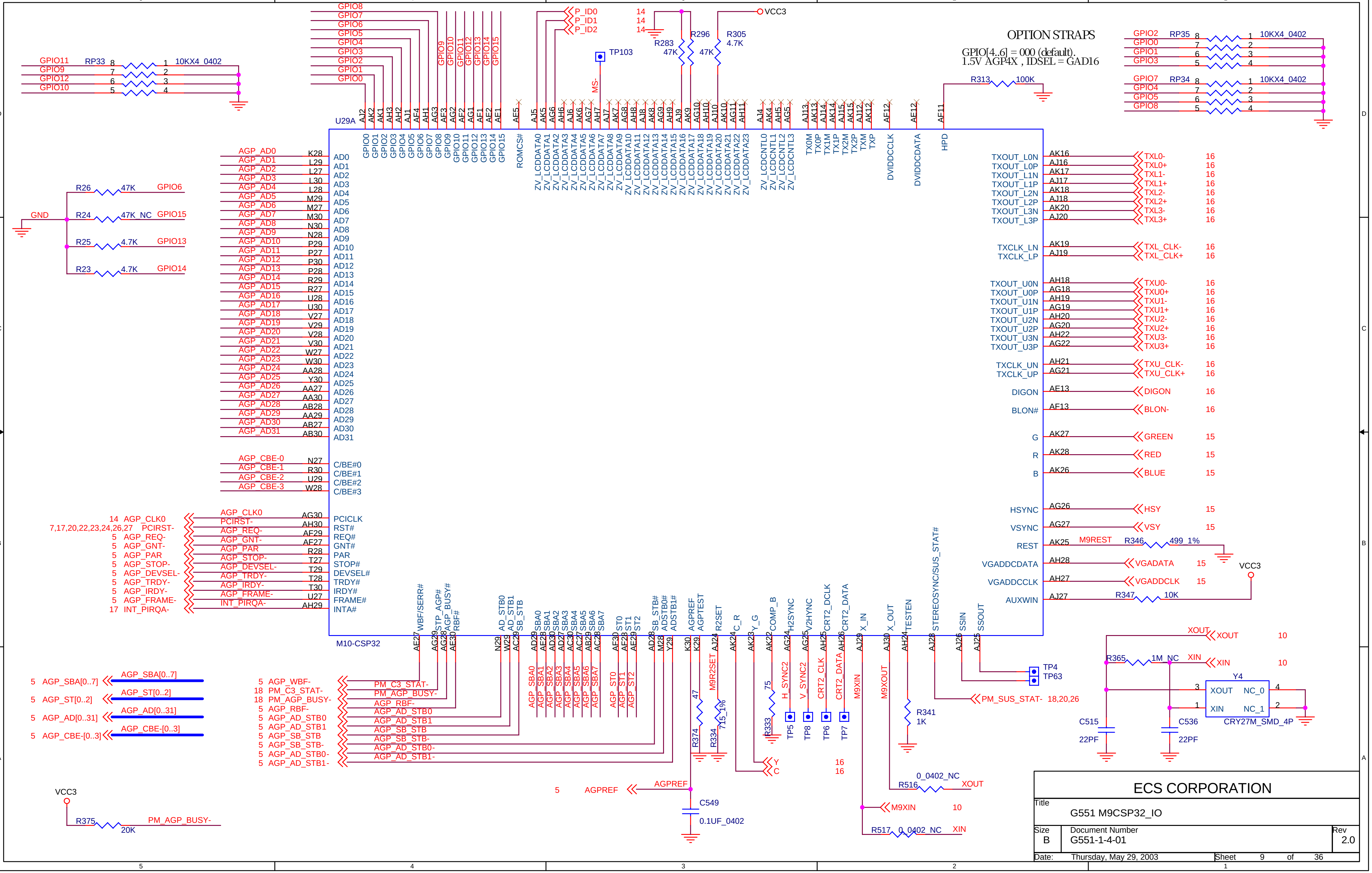
5
4
3
2
1
D
C
B
A
OPTION STRAPS
GPIO[4..6] = 000 (default).
1.5V AGP4X , IDSEL = GAD16
GPIO11
GPIO9
GPIO12
GPIO10
RP33
10KX4_0402
GPIO2
GPIO0
GPIO1
GPIO3
RP35
10KX4_0402
GPIO7
GPIO4
GPIO5
GPIO8
RP34
10KX4_0402
R313
100K
HPD
GPIO8
GPIO7
GPIO6
GPIO5
GPIO4
GPIO3
GPIO2
GPIO1
GPIO0
GPIO9
GPIO10
GPIO11
GPIO12
GPIO13
GPIO14
GPIO15
P_ID0
P_ID1
P_ID2
14
14
14
VCC3
R283
47K
R296
47K
R305
4.7K
TP103
MS-
U29A
M10-CSP32
R26
47K
GPIO6
GND
R24
47K_NC
GPIO15
R25
4.7K
GPIO13
R23
4.7K
GPIO14
AGP_AD0
AGP_AD1
AGP_AD2
AGP_AD3
AGP_AD4
AGP_AD5
AGP_AD6
AGP_AD7
AGP_AD8
AGP_AD9
AGP_AD10
AGP_AD11
AGP_AD12
AGP_AD13
AGP_AD14
AGP_AD15
AGP_AD16
AGP_AD17
AGP_AD18
AGP_AD19
AGP_AD20
AGP_AD21
AGP_AD22
AGP_AD23
AGP_AD24
AGP_AD25
AGP_AD26
AGP_AD27
AGP_AD28
AGP_AD29
AGP_AD30
AGP_AD31
AGP_CBE-0
AGP_CBE-1
AGP_CBE-2
AGP_CBE-3
C/BE#0
C/BE#1
C/BE#2
C/BE#3
14 AGP_CLK0
7,17,20,22,23,24,26,27 PCIRST-
5 AGP_REQ-
5 AGP_GNT-
5 AGP_PAR
5 AGP_STOP-
5 AGP_DEVSEL-
5 AGP_TRDY-
5 AGP_IRDY-
5 AGP_FRAME-
17 INT_PIRQA-
PCICLK
RST#
REQ#
GNT#
PAR
STOP#
DEVSEL#
TRDY#
IRDY#
FRAME#
INTA#
ROMCS#
ZV_LCDDATA0 … ZV_LCDDATA23
ZV_LCDCNTL0
ZV_LCDCNTL1
ZV_LCDCNTL2
ZV_LCDCNTL3
TX0M
TX0P
TX1M
TX1P
TX2M
TX2P
TXM
TXP
DVIDDCCLK
DVIDDCDATA
TXOUT_L0N
TXOUT_L0P
TXOUT_L1N
TXOUT_L1P
TXOUT_L2N
TXOUT_L2P
TXOUT_L3N
TXOUT_L3P
TXL0- 16
TXL0+ 16
TXL1- 16
TXL1+ 16
TXL2- 16
TXL2+ 16
TXL3- 16
TXL3+ 16
TXCLK_LN
TXCLK_LP
TXL_CLK- 16
TXL_CLK+ 16
TXOUT_U0N
TXOUT_U0P
TXOUT_U1N
TXOUT_U1P
TXOUT_U2N
TXOUT_U2P
TXOUT_U3N
TXOUT_U3P
TXU0- 16
TXU0+ 16
TXU1- 16
TXU1+ 16
TXU2- 16
TXU2+ 16
TXU3- 16
TXU3+ 16
TXCLK_UN
TXCLK_UP
TXU_CLK- 16
TXU_CLK+ 16
DIGON 16
BLON# 
BLON- 16
G
GREEN 15
R
RED 15
B
BLUE 15
HSYNC
HSY 15
VSYNC
VSY 15
REST
M9REST
R346
499_1%
VGADDCDATA
VGADATA 15
VGADDCCLK
VGADDCLK 15
AUXWIN
R347
10K
VCC3
WBF/SERR#
STP_AGP#
AGP_BUSY#
RBF#
AD_STB0
AD_STB1
SB_STB
SBA0
SBA1
SBA2
SBA3
SBA4
SBA5
SBA6
SBA7
ST0
ST1
ST2
SB_STB#
ADSTB0#
ADSTB1#
AGPREF
AGPTEST
R2SET
C_R
Y_G
COMP_B
H2SYNC
V2HYNC
CRT2_DCLK
CRT2_DATA
X_IN
X_OUT
TESTEN
STEREOSYNC/SUS_STAT#
SSIN
SSOUT
5 AGP_SBA[0..7]
AGP_SBA[0..7]
5 AGP_ST[0..2]
AGP_ST[0..2]
5 AGP_AD[0..31]
AGP_AD[0..31]
5 AGP_CBE-[0..3]
AGP_CBE-[0..3]
5 AGP_WBF-
18 PM_C3_STAT-
18 PM_AGP_BUSY-
5 AGP_RBF-
5 AGP_AD_STB0
5 AGP_AD_STB1
5 AGP_SB_STB
5 AGP_SB_STB-
5 AGP_AD_STB0-
5 AGP_AD_STB1-
AGP_SBA0 … AGP_SBA7
AGP_ST0
AGP_ST1
AGP_ST2
R374
47
R334
715_1%
M9R2SET
75
R333
H_SYNC2
V_SYNC2
CRT2_CLK
CRT2_DATA
M9XIN
M9XOUT
TP5
TP8
TP6
TP7
Y
C
16
16
R341
1K
PM_SUS_STAT- 18,20,26
TP4
TP63
XOUT
XOUT 10
R365
1M_NC
XIN
XIN 10
Y4
XOUT
NC_0
XIN
NC_1
CRY27M_SMD_4P
C515
22PF
C536
22PF
5
AGPREF
AGPREF
C549
0.1UF_0402
R516
0_0402_NC
XOUT
M9XIN 10
R517
0_0402_NC
XIN
VCC3
R375
20K
PM_AGP_BUSY-

ECS CORPORATION

Title
G551 M9CSP32_IO

| Size | Document Number | Rev |
|---|---|---|
| B | G551-1-4-01 | 2.0 |

Date: Thursday, May 29, 2003 Sheet 9 of 36

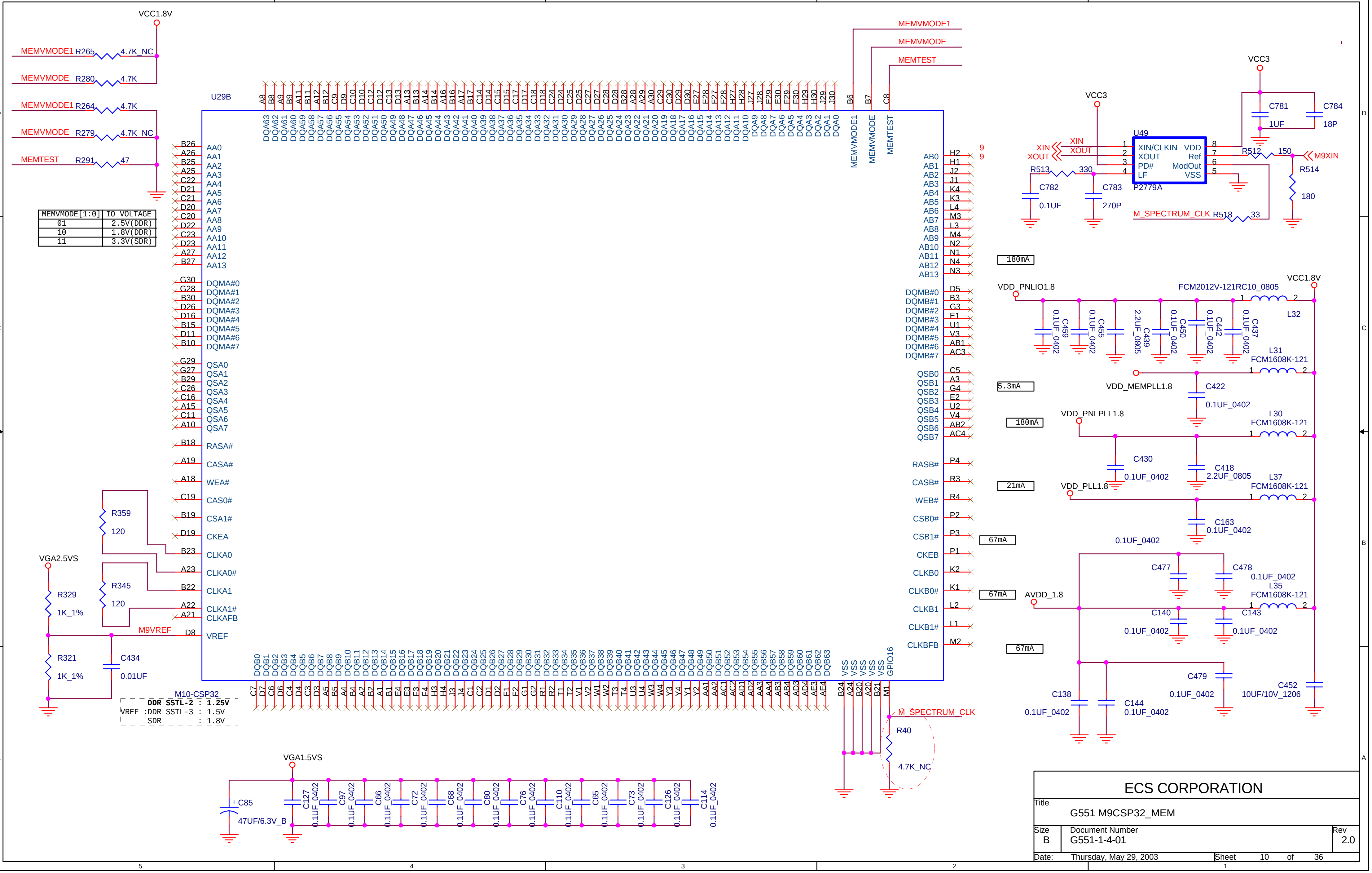
VCC1.8V
MEMVMODE1 R265 4.7K_NC
MEMVMODE R280 4.7K
MEMVMODE1 R264 4.7K
MEMVMODE R279 4.7K_NC
MEMTEST R291 47
U29B
M10-CSP32
MEMVMODE1
MEMVMODE
MEMTEST
AA0 … AA13
DQMA#0 … DQMA#7
QSA0 … QSA7
RASA#
CASA#
WEA#
CAS0#
CSA1#
CKEA
CLKA0
CLKA0#
CLKA1
CLKA1#
CLKAFB
VREF
DQA63 … DQA0
DQB0 … DQB63
AB0 … AB13
DQMB#0 … DQMB#7
QSB0 … QSB7
RASB#
CASB#
WEB#
CSB0#
CSB1#
CKEB
CLKB0
CLKB0#
CLKB1
CLKB1#
CLKBFB
VSS
GPIO16
R359 120
R345 120
VGA2.5VS
R329 1K_1%
R321 1K_1%
C434 0.01UF
M9VREF
VGA1.5VS
C85 47UF/6.3V_B
C127 C97 C66 C72 C68 C80 C76 C110 C65 C73 C126 C114 0.1UF_0402
M_SPECTRUM_CLK
R40 4.7K_NC
VCC3
C781 1UF
C784 18P
U49
P2779A
XIN/CLKIN
XOUT
PD#
LF
VDD
Ref
ModOut
VSS
XIN
XOUT
R512 150
M9XIN
R514 180
R513 330
C782 0.1UF
C783 270P
M_SPECTRUM_CLK R518 33
180mA
VDD_PNLIO1.8
VCC1.8V
FCM2012V-121RC10_0805
L32
C459 C455 C439 C450 C442 C437 0.1UF_0402
2.2UF_0805
L31 FCM1608K-121
5.3mA
VDD_MEMPLL1.8
C422 0.1UF_0402
180mA
VDD_PNLPLL1.8
L30 FCM1608K-121
C430 0.1UF_0402
C418 2.2UF_0805
21mA
VDD_PLL1.8
L37 FCM1608K-121
C163 0.1UF_0402
67mA
0.1UF_0402
C477
C478 0.1UF_0402
L35 FCM1608K-121
67mA
AVDD_1.8
C140 0.1UF_0402
C143 0.1UF_0402
67mA
C479 0.1UF_0402
C138 0.1UF_0402
C144 0.1UF_0402
C452 10UF/10V_1206

| MEMVMODE[1:0] | IO VOLTAGE |
|---|---|
| 01 | 2.5V(DDR) |
| 10 | 1.8V(DDR) |
| 11 | 3.3V(SDR) |

```
      DDR SSTL-2 : 1.25V
VREF :DDR SSTL-3 : 1.5V
      SDR        : 1.8V
```

ECS CORPORATION

Title
G551 M9CSP32_MEM

Size B
Document Number G551-1-4-01
Rev 2.0

Date: Thursday, May 29, 2003
Sheet 10 of 36

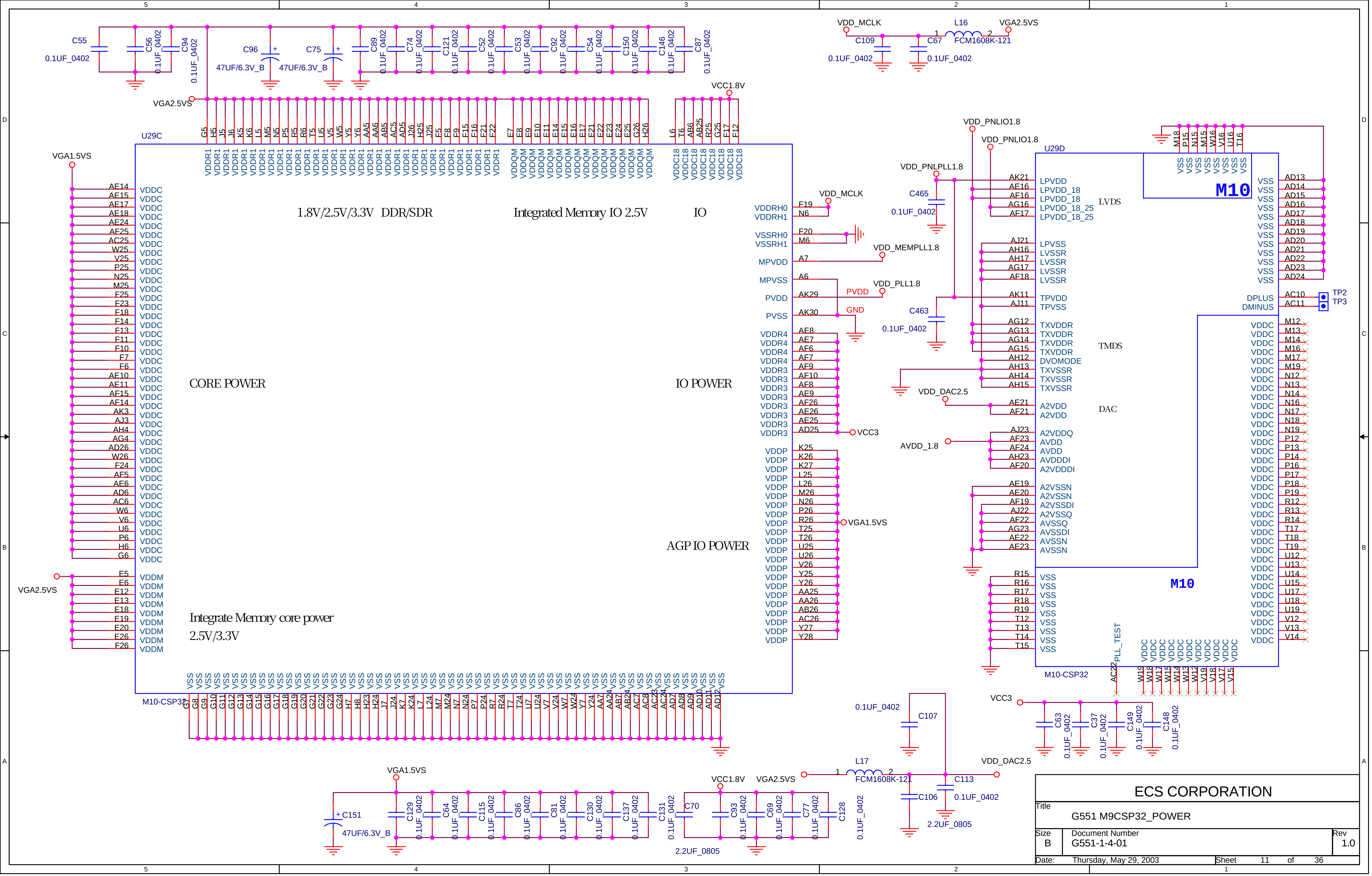
1.8V/2.5V/3.3V DDR/SDR
Integrated Memory IO 2.5V
IO
CORE POWER
IO POWER
AGP IO POWER
Integrate Memory core power
2.5V/3.3V
U29C
M10-CSP32
U29D
M10
LVDS
TMDS
DAC
VGA2.5VS
VGA1.5VS
VCC1.8V
VCC3
VDD_MCLK
VDD_PNLIO1.8
VDD_PNLPLL1.8
VDD_MEMPLL1.8
VDD_PLL1.8
VDD_DAC2.5
AVDD_1.8
PVDD
GND
TP2
TP3
L16
FCM1608K-121
L17
FCM1608K-121
C55
C56
C94
C96
C75
C89
C74
C121
C52
C53
C92
C54
C150
C146
C87
C109
C67
C465
C463
C107
C106
C113
C63
C37
C149
C148
C151
C129
C64
C115
C86
C81
C130
C137
C131
C70
C93
C69
C77
C128
0.1UF_0402
47UF/6.3V_B
2.2UF_0805
VDDR1
VDDQM
VDDC18
VDDC
VDDM
VDDRH0
VDDRH1
VSSRH0
VSSRH1
MPVDD
MPVSS
PVDD
PVSS
VDDR4
VDDR3
VDDP
VSS
LPVDD
LPVDD_18
LPVDD_18_25
LPVSS
LVSSR
TPVDD
TPVSS
TXVDDR
DVOMODE
TXVSSR
A2VDD
A2VDDQ
AVDD
AVDDDI
A2VDDDI
A2VSSN
A2VSSDI
A2VSSQ
AVSSQ
AVSSDI
AVSSN
DPLUS
DMINUS
PLL_TEST

ECS CORPORATION

Title
G551 M9CSP32_POWER

Size B
Document Number G551-1-4-01
Rev 1.0

Date: Thursday, May 29, 2003
Sheet 11 of 36

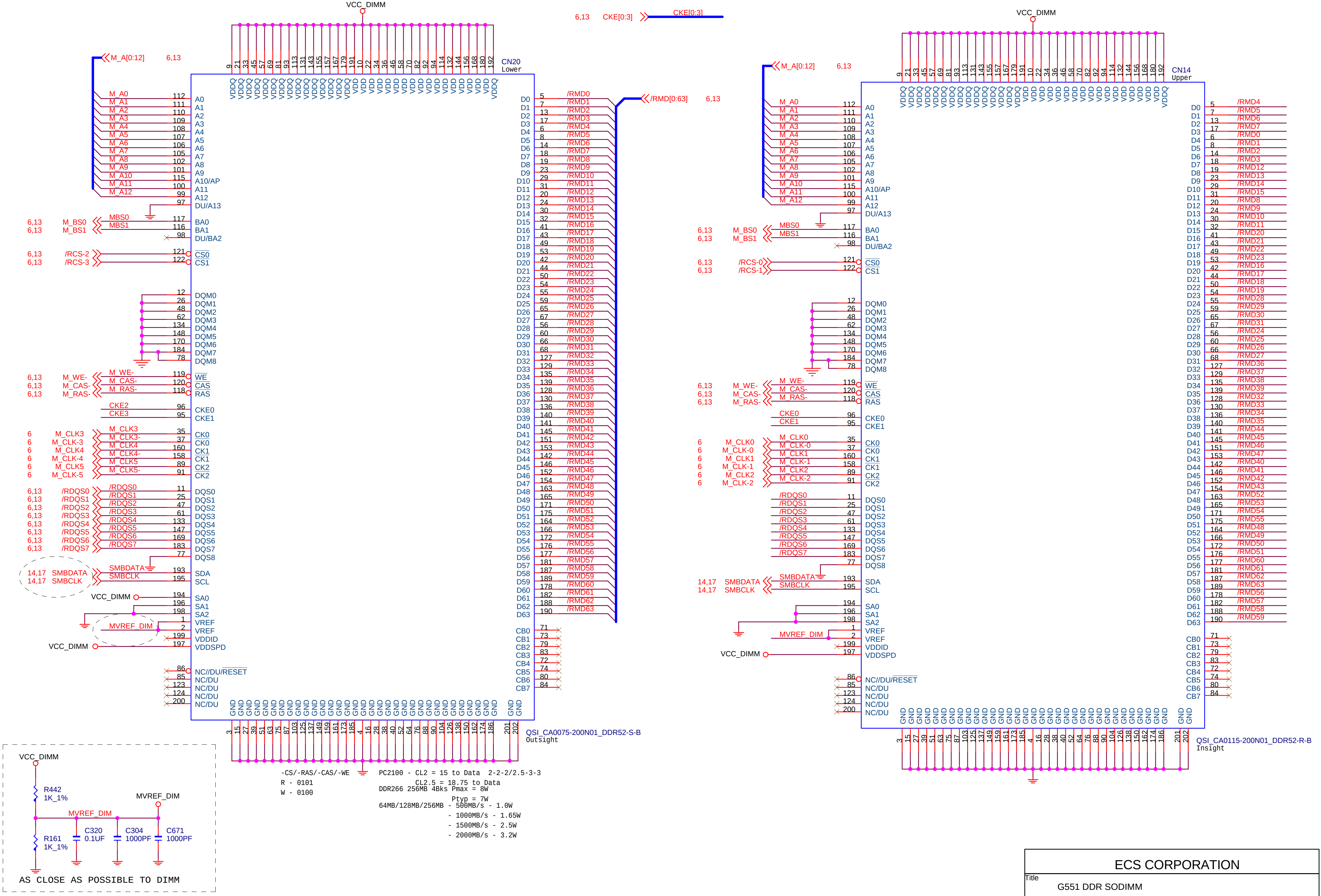
VCC_DIMM
6,13 CKE[0:3]
CKE[0:3]
M_A[0:12] 6,13
CN20
Lower
/RMD[0:63] 6,13
M_A0 … M_A12
A0 A1 A2 A3 A4 A5 A6 A7 A8 A9 A10/AP A11 A12 DU/A13
6,13 M_BS0 MBS0
6,13 M_BS1 MBS1
BA0 BA1 DU/BA2
6,13 /RCS-2
6,13 /RCS-3
CS0 CS1
DQM0 DQM1 DQM2 DQM3 DQM4 DQM5 DQM6 DQM7 DQM8
6,13 M_WE-
6,13 M_CAS-
6,13 M_RAS-
WE CAS RAS
CKE2 CKE3
CKE0 CKE1
6 M_CLK3
6 M_CLK-3
6 M_CLK4
6 M_CLK-4
6 M_CLK5
6 M_CLK-5
CK0 CK0 CK1 CK1 CK2 CK2
6,13 /RDQS0 … /RDQS7
DQS0 DQS1 DQS2 DQS3 DQS4 DQS5 DQS6 DQS7 DQS8
14,17 SMBDATA
14,17 SMBCLK
SDA SCL
VCC_DIMM
SA0 SA1 SA2
MVREF_DIM
VREF VREF VDDID VDDSPD
VCC_DIMM
NC//DU/RESET NC/DU NC/DU NC/DU NC/DU
D0 … D63
/RMD0 … /RMD63
CB0 CB1 CB2 CB3 CB4 CB5 CB6 CB7
VDDQ VDD GND
QSI_CA0075-200N01_DDR52-S-B
Outsight
VCC_DIMM
M_A[0:12] 6,13
CN14
Upper
6,13 M_BS0 MBS0
6,13 M_BS1 MBS1
6,13 /RCS-0
6,13 /RCS-1
6,13 M_WE-
6,13 M_CAS-
6,13 M_RAS-
CKE0 CKE1
6 M_CLK0
6 M_CLK-0
6 M_CLK1
6 M_CLK-1
6 M_CLK2
6 M_CLK-2
/RDQS0 … /RDQS7
14,17 SMBDATA
14,17 SMBCLK
MVREF_DIM
VCC_DIMM
/RMD4 /RMD5 /RMD6 /RMD7 /RMD0 /RMD1 /RMD2 /RMD3 /RMD12 /RMD13 /RMD14 /RMD15 /RMD8 /RMD9 /RMD10 /RMD11 /RMD20 /RMD21 /RMD22 /RMD23 /RMD16 /RMD17 /RMD18 /RMD19 /RMD28 /RMD29 /RMD30 /RMD31 /RMD24 /RMD25 /RMD26 /RMD27 /RMD36 /RMD37 /RMD38 /RMD39 /RMD32 /RMD33 /RMD34 /RMD35 /RMD44 /RMD45 /RMD46 /RMD47 /RMD40 /RMD41 /RMD42 /RMD43 /RMD52 /RMD53 /RMD54 /RMD55 /RMD48 /RMD49 /RMD50 /RMD51 /RMD60 /RMD61 /RMD62 /RMD63 /RMD56 /RMD57 /RMD58 /RMD59
QSI_CA0115-200N01_DDR52-R-B
Insight
VCC_DIMM
R442
1K_1%
MVREF_DIM
MVREF_DIM
R161
1K_1%
C320
0.1UF
C304
1000PF
C671
1000PF

AS CLOSE AS POSSIBLE TO DIMM

```
-CS/-RAS/-CAS/-WE
R - 0101
W - 0100
```

```
PC2100 - CL2 = 15 to Data  2-2-2/2.5-3-3
         CL2.5 = 18.75 to Data
DDR266 256MB 4Bks Pmax = 8W
                  Ptyp = 7W
64MB/128MB/256MB - 500MB/s - 1.0W
                 - 1000MB/s - 1.65W
                 - 1500MB/s - 2.5W
                 - 2000MB/s - 3.2W
```

| | | |
|---|---|---|
| ECS CORPORATION | | |
| Title<br>G551 DDR SODIMM | | |
| Size<br>A3 | Document Number<br>G551-1-4-01 | Rev<br>1.0 |
| Date: Thursday, May 29, 2003 | Sheet 12 of 36 | |

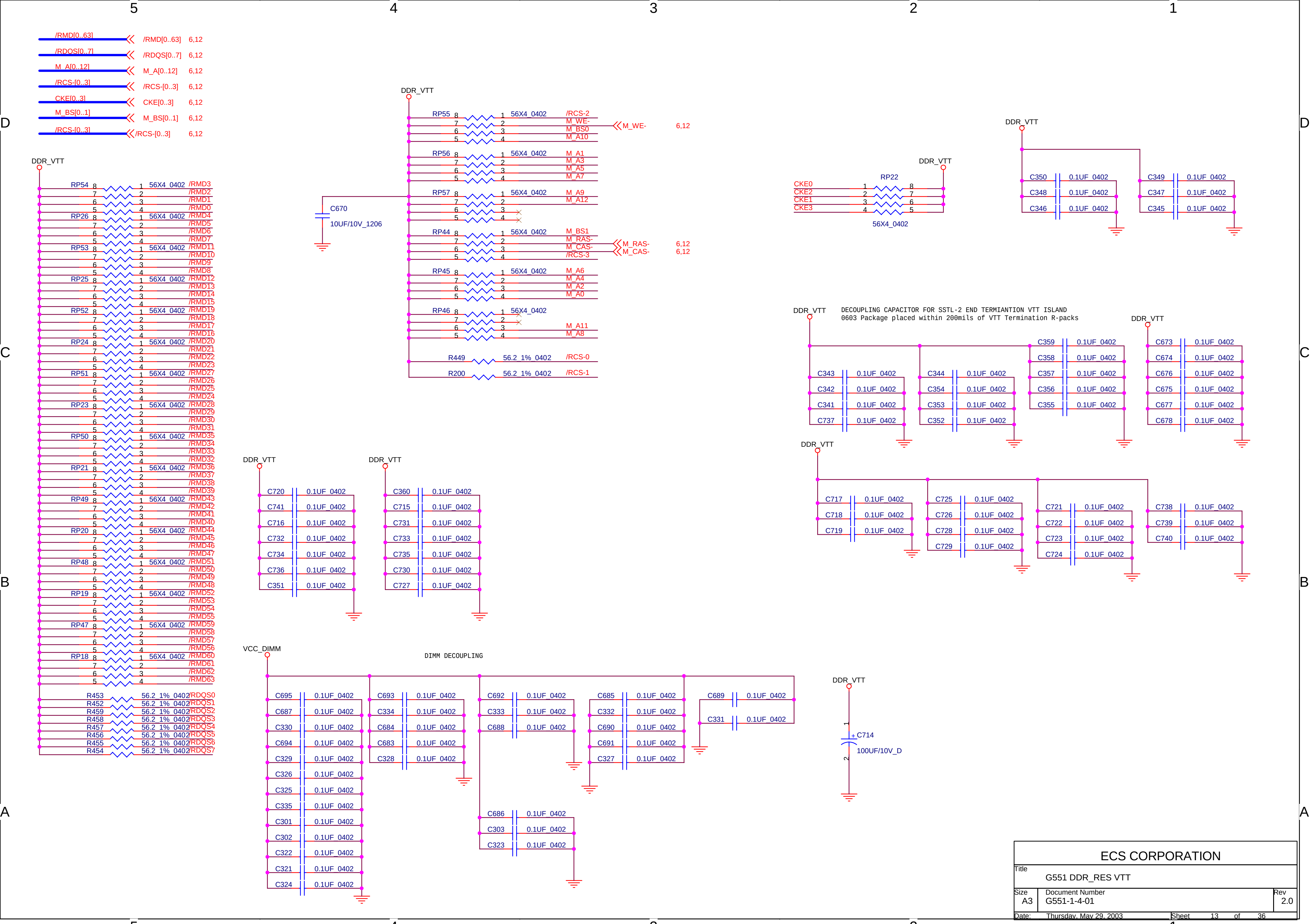
5
4
3
2
1
D
C
B
A
/RMD[0..63] /RMD[0..63] 6,12
/RDQS[0..7] /RDQS[0..7] 6,12
M_A[0..12] M_A[0..12] 6,12
/RCS-[0..3] /RCS-[0..3] 6,12
CKE[0..3] CKE[0..3] 6,12
M_BS[0..1] M_BS[0..1] 6,12
/RCS-[0..3] /RCS-[0..3] 6,12
DDR_VTT
RP54 56X4_0402 /RMD3 /RMD2 /RMD1 /RMD0
RP26 56X4_0402 /RMD4 /RMD5 /RMD6 /RMD7
RP53 56X4_0402 /RMD11 /RMD10 /RMD9 /RMD8
RP25 56X4_0402 /RMD12 /RMD13 /RMD14 /RMD15
RP52 56X4_0402 /RMD19 /RMD18 /RMD17 /RMD16
RP24 56X4_0402 /RMD20 /RMD21 /RMD22 /RMD23
RP51 56X4_0402 /RMD27 /RMD26 /RMD25 /RMD24
RP23 56X4_0402 /RMD28 /RMD29 /RMD30 /RMD31
RP50 56X4_0402 /RMD35 /RMD34 /RMD33 /RMD32
RP21 56X4_0402 /RMD36 /RMD37 /RMD38 /RMD39
RP49 56X4_0402 /RMD43 /RMD42 /RMD41 /RMD40
RP20 56X4_0402 /RMD44 /RMD45 /RMD46 /RMD47
RP48 56X4_0402 /RMD51 /RMD50 /RMD49 /RMD48
RP19 56X4_0402 /RMD52 /RMD53 /RMD54 /RMD55
RP47 56X4_0402 /RMD59 /RMD58 /RMD57 /RMD56
RP18 56X4_0402 /RMD60 /RMD61 /RMD62 /RMD63
R453 56.2_1%_0402 /RDQS0
R452 56.2_1%_0402 /RDQS1
R459 56.2_1%_0402 /RDQS2
R458 56.2_1%_0402 /RDQS3
R457 56.2_1%_0402 /RDQS4
R456 56.2_1%_0402 /RDQS5
R455 56.2_1%_0402 /RDQS6
R454 56.2_1%_0402 /RDQS7
DDR_VTT
RP55 56X4_0402 /RCS-2 M_WE- M_BS0 M_A10
M_WE- 6,12
RP56 56X4_0402 M_A1 M_A3 M_A5 M_A7
RP57 56X4_0402 M_A9 M_A12
C670 10UF/10V_1206
RP44 56X4_0402 M_BS1 M_RAS- M_CAS- /RCS-3
M_RAS- 6,12
M_CAS- 6,12
RP45 56X4_0402 M_A6 M_A4 M_A2 M_A0
RP46 56X4_0402 M_A11 M_A8
R449 56.2_1%_0402 /RCS-0
R200 56.2_1%_0402 /RCS-1
DDR_VTT
RP22 56X4_0402 CKE0 CKE2 CKE1 CKE3
DDR_VTT
C350 0.1UF_0402
C348 0.1UF_0402
C346 0.1UF_0402
C349 0.1UF_0402
C347 0.1UF_0402
C345 0.1UF_0402
DECOUPLING CAPACITOR FOR SSTL-2 END TERMIANTION VTT ISLAND
0603 Package placed within 200mils of VTT Termination R-packs
DDR_VTT
C343 0.1UF_0402
C342 0.1UF_0402
C341 0.1UF_0402
C737 0.1UF_0402
C344 0.1UF_0402
C354 0.1UF_0402
C353 0.1UF_0402
C352 0.1UF_0402
C359 0.1UF_0402
C358 0.1UF_0402
C357 0.1UF_0402
C356 0.1UF_0402
C355 0.1UF_0402
DDR_VTT
C673 0.1UF_0402
C674 0.1UF_0402
C676 0.1UF_0402
C675 0.1UF_0402
C677 0.1UF_0402
C678 0.1UF_0402
DDR_VTT
C717 0.1UF_0402
C718 0.1UF_0402
C719 0.1UF_0402
C725 0.1UF_0402
C726 0.1UF_0402
C728 0.1UF_0402
C729 0.1UF_0402
C721 0.1UF_0402
C722 0.1UF_0402
C723 0.1UF_0402
C724 0.1UF_0402
C738 0.1UF_0402
C739 0.1UF_0402
C740 0.1UF_0402
DDR_VTT
C720 0.1UF_0402
C741 0.1UF_0402
C716 0.1UF_0402
C732 0.1UF_0402
C734 0.1UF_0402
C736 0.1UF_0402
C351 0.1UF_0402
DDR_VTT
C360 0.1UF_0402
C715 0.1UF_0402
C731 0.1UF_0402
C733 0.1UF_0402
C735 0.1UF_0402
C730 0.1UF_0402
C727 0.1UF_0402
VCC_DIMM
DIMM DECOUPLING
C695 0.1UF_0402
C687 0.1UF_0402
C330 0.1UF_0402
C694 0.1UF_0402
C329 0.1UF_0402
C326 0.1UF_0402
C325 0.1UF_0402
C335 0.1UF_0402
C301 0.1UF_0402
C302 0.1UF_0402
C322 0.1UF_0402
C321 0.1UF_0402
C324 0.1UF_0402
C693 0.1UF_0402
C334 0.1UF_0402
C684 0.1UF_0402
C683 0.1UF_0402
C328 0.1UF_0402
C692 0.1UF_0402
C333 0.1UF_0402
C688 0.1UF_0402
C686 0.1UF_0402
C303 0.1UF_0402
C323 0.1UF_0402
C685 0.1UF_0402
C332 0.1UF_0402
C690 0.1UF_0402
C691 0.1UF_0402
C327 0.1UF_0402
C689 0.1UF_0402
C331 0.1UF_0402
DDR_VTT
C714 100UF/10V_D

ECS CORPORATION

Title
G551 DDR_RES VTT

Size A3
Document Number G551-1-4-01
Rev 2.0

Date: Thursday, May 29, 2003
Sheet 13 of 36

# Main Clock Generator

(3 OPTIONS)
1: (ICS)
2: (Cypress)
3. (Hitachi)

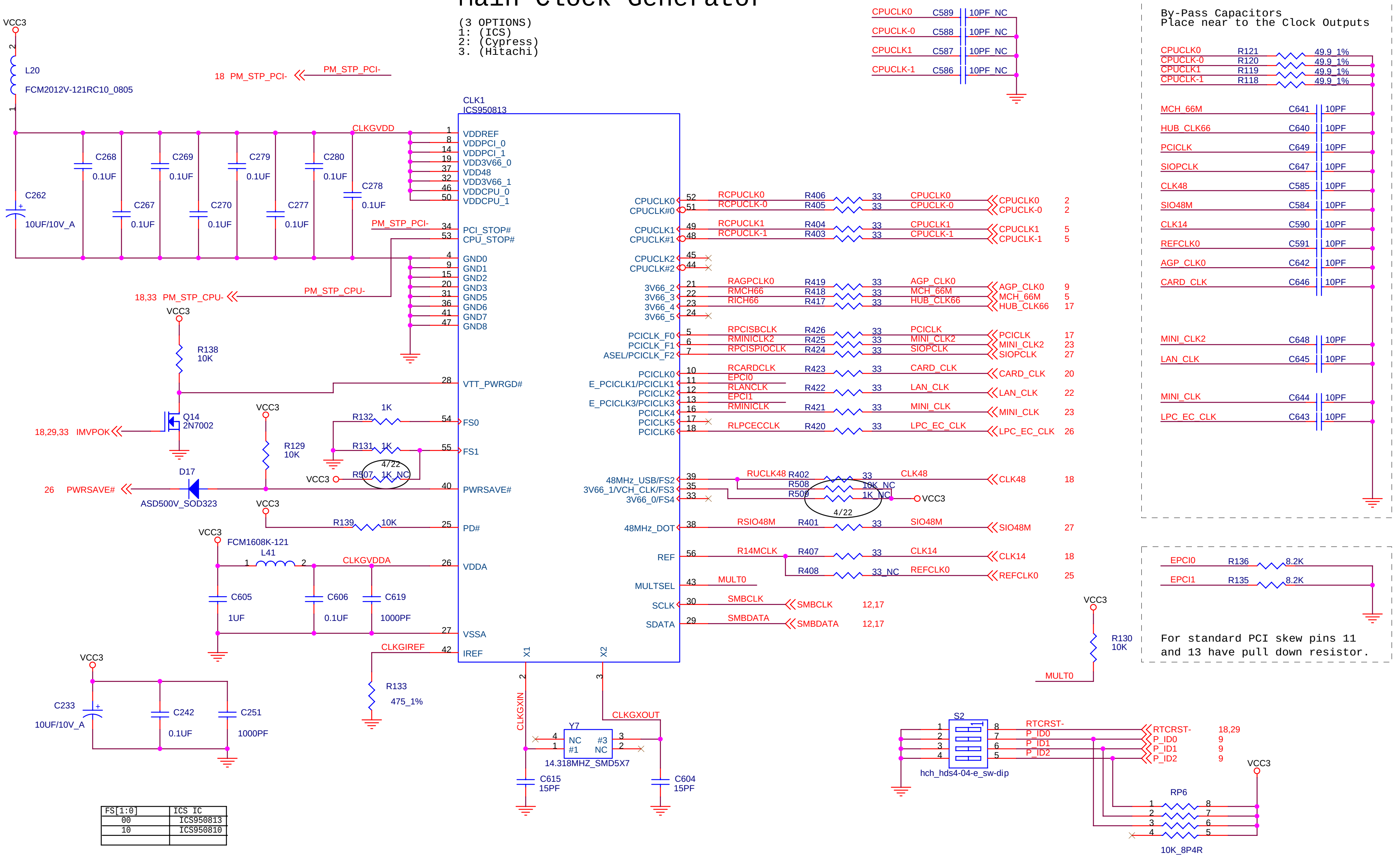
VCC3
L20
FCM2012V-121RC10_0805
PM_STP_PCI-
18 PM_STP_PCI-
CLK1
ICS950813
CLKGVDD
C268 0.1UF
C269 0.1UF
C279 0.1UF
C280 0.1UF
C278 0.1UF
C267 0.1UF
C270 0.1UF
C277 0.1UF
C262 10UF/10V_A
VDDREF
VDDPCI_0
VDDPCI_1
VDD3V66_0
VDD48
VDD3V66_1
VDDCPU_0
VDDCPU_1
PCI_STOP#
CPU_STOP#
GND0
GND1
GND2
GND3
GND5
GND6
GND7
GND8
18,33 PM_STP_CPU-
PM_STP_CPU-
R138 10K
VTT_PWRGD#
18,29,33 IMVPOK
Q14 2N7002
R132 1K
FS0
R131 1K
FS1
R129 10K
R507 1K_NC
4/22
26 PWRSAVE#
D17 ASD500V_SOD323
PWRSAVE#
R139 10K
PD#
FCM1608K-121
L41
CLKGVDDA
VDDA
C605 1UF
C606 0.1UF
C619 1000PF
VSSA
CLKGIREF
IREF
R133 475_1%
X1
X2
CLKGXIN
CLKGXOUT
Y7
NC #1
#3 NC
14.318MHZ_SMD5X7
C615 15PF
C604 15PF
C233 10UF/10V_A
C242 0.1UF
C251 1000PF
CPUCLK0
CPUCLK#0
CPUCLK1
CPUCLK#1
CPUCLK2
CPUCLK#2
3V66_2
3V66_3
3V66_4
3V66_5
PCICLK_F0
PCICLK_F1
ASEL/PCICLK_F2
PCICLK0
E_PCICLK1/PCICLK1
PCICLK2
E_PCICLK3/PCICLK3
PCICLK4
PCICLK5
PCICLK6
48MHz_USB/FS2
3V66_1/VCH_CLK/FS3
3V66_0/FS4
48MHz_DOT
REF
MULTSEL
SCLK
SDATA
RCPUCLK0 R406 33 CPUCLK0 2
RCPUCLK-0 R405 33 CPUCLK-0 2
RCPUCLK1 R404 33 CPUCLK1 5
RCPUCLK-1 R403 33 CPUCLK-1 5
RAGPCLK0 R419 33 AGP_CLK0 9
RMCH66 R418 33 MCH_66M 5
RICH66 R417 33 HUB_CLK66 17
RPCISBCLK R426 33 PCICLK 17
RMINICLK2 R425 33 MINI_CLK2 23
RPCISPIOCLK R424 33 SIOPCLK 27
RCARDCLK R423 33 CARD_CLK 20
EPCI0
RLANCLK R422 33 LAN_CLK 22
EPCI1
RMINICLK R421 33 MINI_CLK 23
RLPCECCLK R420 33 LPC_EC_CLK 26
RUCLK48 R402 33 CLK48 18
R508 10K_NC
R509 1K_NC
VCC3
4/22
RSIO48M R401 33 SIO48M 27
R14MCLK R407 33 CLK14 18
R408 33_NC REFCLK0 25
MULT0
SMBCLK 12,17
SMBDATA 12,17
CPUCLK0 C589 10PF_NC
CPUCLK-0 C588 10PF_NC
CPUCLK1 C587 10PF_NC
CPUCLK-1 C586 10PF_NC
By-Pass Capacitors
Place near to the Clock Outputs
CPUCLK0 R121 49.9_1%
CPUCLK-0 R120 49.9_1%
CPUCLK1 R119 49.9_1%
CPUCLK-1 R118 49.9_1%
MCH_66M C641 10PF
HUB_CLK66 C640 10PF
PCICLK C649 10PF
SIOPCLK C647 10PF
CLK48 C585 10PF
SIO48M C584 10PF
CLK14 C590 10PF
REFCLK0 C591 10PF
AGP_CLK0 C642 10PF
CARD_CLK C646 10PF
MINI_CLK2 C648 10PF
LAN_CLK C645 10PF
MINI_CLK C644 10PF
LPC_EC_CLK C643 10PF
EPCI0 R136 8.2K
EPCI1 R135 8.2K
For standard PCI skew pins 11
and 13 have pull down resistor.
R130 10K
MULT0
S2
hch_hds4-04-e_sw-dip
RTCRST- 18,29
P_ID0 9
P_ID1 9
P_ID2 9
RP6
10K_8P4R
8
7
6
5
4
3
2
1
D
C
B
A

| FS[1:0] | ICS IC |
|---|---|
| 00 | ICS950813 |
| 10 | ICS950810 |
| | |

ECS CORPORATION

Title
G551 CLOCK GENERATOR

Size A3
Document Number G551-1-4-01
Rev 2.0

Date: Thursday, May 29, 2003
Sheet 14 of 36

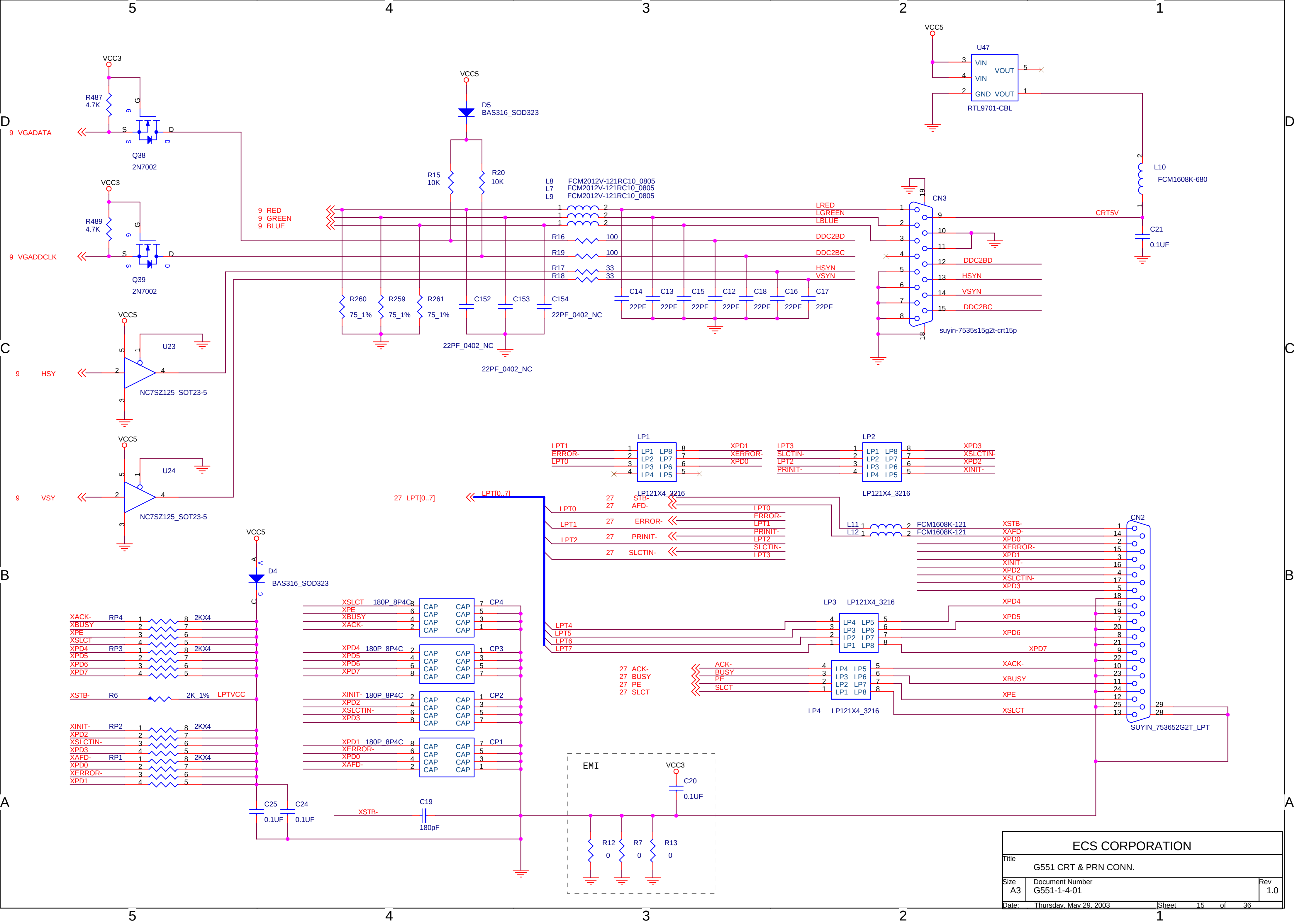
5
4
3
2
1
D
C
B
A
VCC3
R487
4.7K
9 VGADATA
Q38
2N7002
G
S
D
R489
4.7K
9 VGADDCLK
Q39
2N7002
VCC5
D5
BAS316_SOD323
R15
10K
R20
10K
L8
L7
L9
FCM2012V-121RC10_0805
9 RED
9 GREEN
9 BLUE
R16
100
R19
100
R17
33
R18
33
LRED
LGREEN
LBLUE
DDC2BD
DDC2BC
HSYN
VSYN
R260
75_1%
R259
75_1%
R261
75_1%
C152
C153
C154
22PF_0402_NC
C14
C13
C15
C12
C18
C16
C17
22PF
CN3
suyin-7535s15g2t-crt15p
CRT5V
U47
VIN
VOUT
GND
RTL9701-CBL
L10
FCM1608K-680
C21
0.1UF
U23
9 HSY
NC7SZ125_SOT23-5
U24
9 VSY
27 LPT[0..7]
LP1
LP2
LP1 LP8
LP2 LP7
LP3 LP6
LP4 LP5
LP121X4_3216
LPT1
ERROR-
LPT0
XPD1
XERROR-
XPD0
LPT3
SLCTIN-
LPT2
PRINIT-
XPD3
XSLCTIN-
XPD2
XINIT-
27 STB-
27 AFD-
27 ERROR-
27 PRINIT-
27 SLCTIN-
L11
L12
FCM1608K-121
XSTB-
XAFD-
CN2
SUYIN_753652G2T_LPT
LP3
LP4
LPT4
LPT5
LPT6
LPT7
XPD4
XPD5
XPD6
XPD7
27 ACK-
27 BUSY
27 PE
27 SLCT
XACK-
XBUSY
XPE
XSLCT
VCC5
D4
BAS316_SOD323
RP4
RP3
RP2
RP1
2KX4
R6
2K_1%
LPTVCC
180P_8P4C
CP4
CP3
CP2
CP1
CAP
C25
0.1UF
C24
0.1UF
C19
180pF
EMI
C20
0.1UF
R12
0
R7
0
R13
0

ECS CORPORATION

Title
G551 CRT & PRN CONN.

| Size | Document Number | Rev |
|---|---|---|
| A3 | G551-1-4-01 | 1.0 |

Date: Thursday, May 29, 2003 Sheet 15 of 36

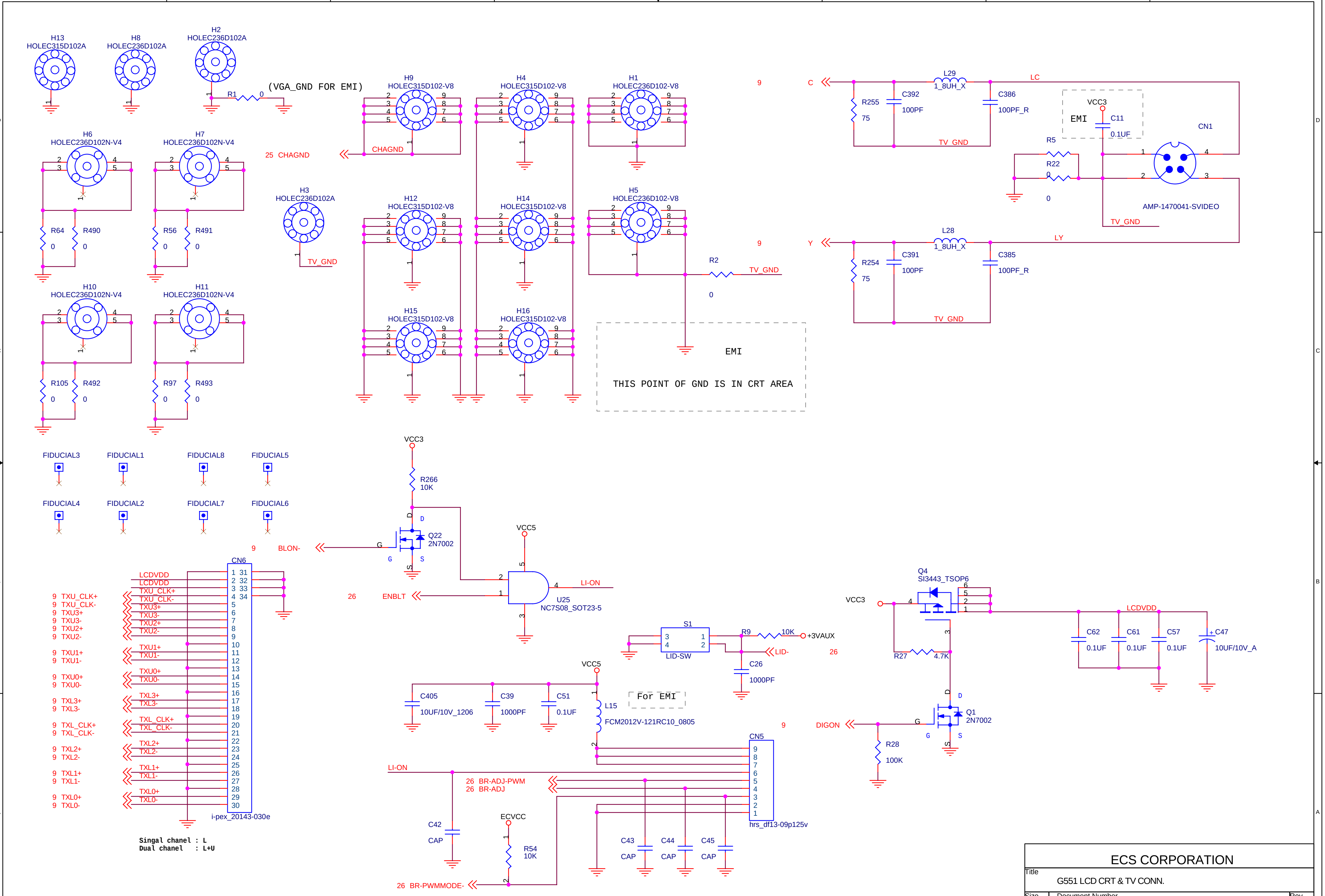
H13
HOLEC315D102A
H8
HOLEC236D102A
H2
HOLEC236D102A
R1
0
(VGA_GND FOR EMI)
H9
HOLEC315D102-V8
H4
HOLEC315D102-V8
H1
HOLEC236D102-V8
25 CHAGND
CHAGND
H6
HOLEC236D102N-V4
H7
HOLEC236D102N-V4
R64 0
R490 0
R56 0
R491 0
H3
HOLEC236D102A
TV_GND
H12
HOLEC315D102-V8
H14
HOLEC315D102-V8
H5
HOLEC236D102-V8
R2
0
TV_GND
H10
HOLEC236D102N-V4
H11
HOLEC236D102N-V4
R105 0
R492 0
R97 0
R493 0
H15
HOLEC315D102-V8
H16
HOLEC315D102-V8
EMI
THIS POINT OF GND IS IN CRT AREA
9 C
R255 75
C392 100PF
L29 1_8UH_X
LC
C386 100PF_R
TV_GND
VCC3
EMI
C11 0.1UF
CN1
R5
R22 0
0
AMP-1470041-SVIDEO
TV_GND
9 Y
R254 75
C391 100PF
L28 1_8UH_X
LY
C385 100PF_R
TV_GND
FIDUCIAL3
FIDUCIAL1
FIDUCIAL8
FIDUCIAL5
FIDUCIAL4
FIDUCIAL2
FIDUCIAL7
FIDUCIAL6
VCC3
R266 10K
Q22 2N7002
9 BLON-
VCC5
U25 NC7S08_SOT23-5
LI-ON
26 ENBLT
CN6
LCDVDD
LCDVDD
TXU_CLK+
TXU_CLK-
TXU3+
TXU3-
TXU2+
TXU2-
9 TXU_CLK+
9 TXU_CLK-
9 TXU3+
9 TXU3-
9 TXU2+
9 TXU2-
9 TXU1+
9 TXU1-
TXU1+
TXU1-
9 TXU0+
9 TXU0-
TXU0+
TXU0-
9 TXL3+
9 TXL3-
TXL3+
TXL3-
9 TXL_CLK+
9 TXL_CLK-
TXL_CLK+
TXL_CLK-
9 TXL2+
9 TXL2-
TXL2+
TXL2-
9 TXL1+
9 TXL1-
TXL1+
TXL1-
9 TXL0+
9 TXL0-
TXL0+
TXL0-
i-pex_20143-030e
Singal chanel : L
Dual chanel : L+U
S1
LID-SW
R9 10K
+3VAUX
LID-
26
C26 1000PF
VCC5
C405 10UF/10V_1206
C39 1000PF
C51 0.1UF
L15 FCM2012V-121RC10_0805
For EMI
CN5
hrs_df13-09p125v
LI-ON
26 BR-ADJ-PWM
26 BR-ADJ
C42 CAP
ECVCC
R54 10K
26 BR-PWMMODE-
C43 CAP
C44 CAP
C45 CAP
Q4
SI3443_TSOP6
VCC3
R27 4.7K
LCDVDD
C62 0.1UF
C61 0.1UF
C57 0.1UF
C47 10UF/10V_A
9 DIGON
Q1 2N7002
R28 100K

ECS CORPORATION

Title
G551 LCD CRT & TV CONN.

| Size | Document Number | Rev |
|---|---|---|
| A3 | G551-1-4-01 | 1.0 |

Date: Thursday, May 29, 2003 Sheet 16 of 36

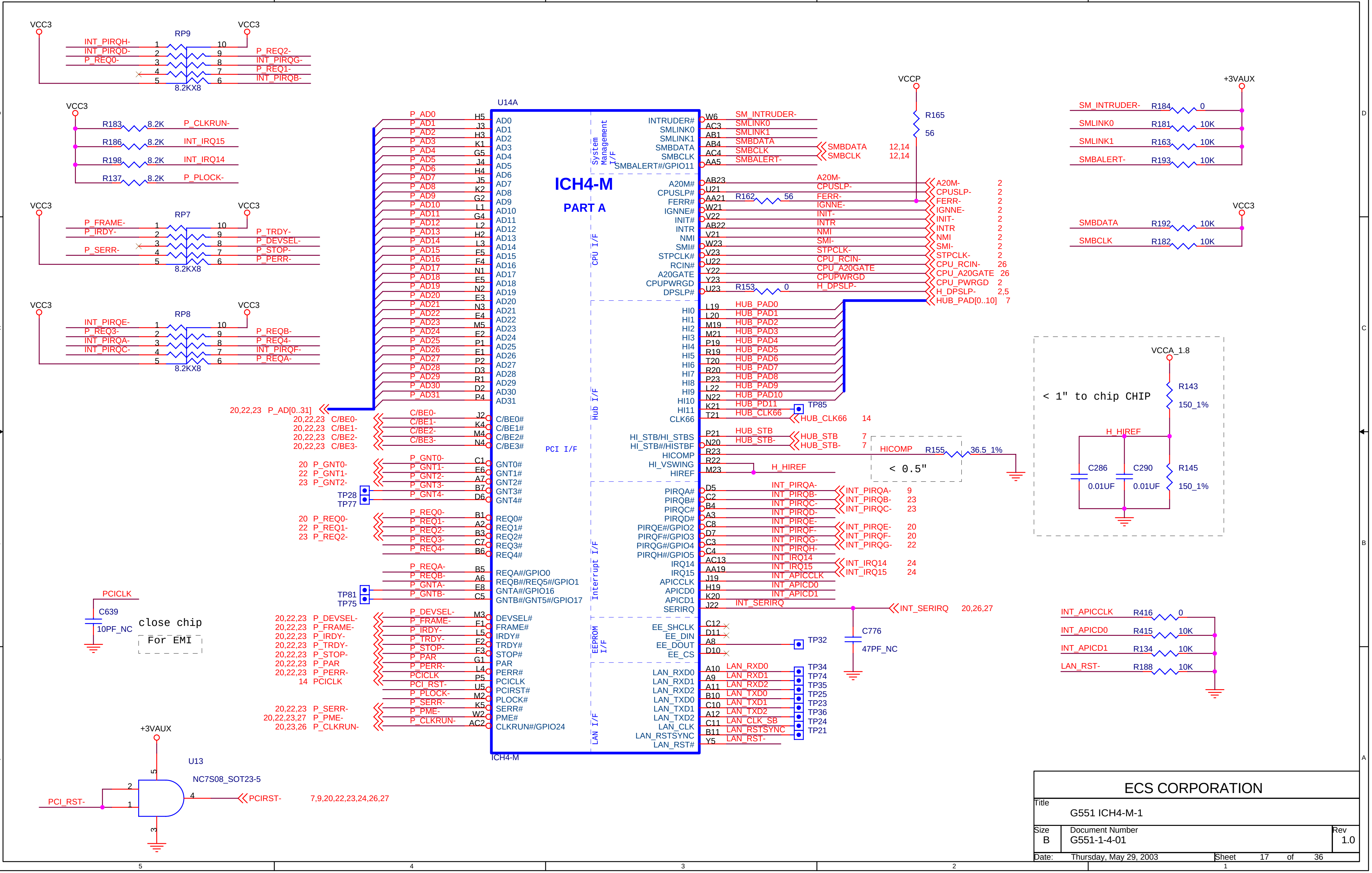
VCC3
RP9
INT_PIRQH-
INT_PIRQD-
P_REQ0-
P_REQ2-
INT_PIRQG-
P_REQ1-
INT_PIRQB-
8.2KX8
R183 8.2K P_CLKRUN-
R186 8.2K INT_IRQ15
R198 8.2K INT_IRQ14
R137 8.2K P_PLOCK-
RP7
P_FRAME-
P_IRDY-
P_SERR-
P_TRDY-
P_DEVSEL-
P_STOP-
P_PERR-
RP8
INT_PIRQE-
P_REQ3-
INT_PIRQA-
INT_PIRQC-
P_REQB-
P_REQ4-
INT_PIRQF-
P_REQA-
U14A
ICH4-M
PART A
System Management I/F
CPU I/F
Hub I/F
PCI I/F
Interrupt I/F
EEPROM I/F
LAN I/F
AD0 … AD31
P_AD0 … P_AD31
20,22,23 P_AD[0..31]
C/BE0# C/BE1# C/BE2# C/BE3#
20,22,23 C/BE0-
20,22,23 C/BE1-
20,22,23 C/BE2-
20,22,23 C/BE3-
GNT0# GNT1# GNT2# GNT3# GNT4#
20 P_GNT0-
22 P_GNT1-
23 P_GNT2-
TP28
TP77
REQ0# REQ1# REQ2# REQ3# REQ4#
20 P_REQ0-
22 P_REQ1-
23 P_REQ2-
REQA#/GPIO0
REQB#/REQ5#/GPIO1
GNTA#/GPIO16
GNTB#/GNT5#/GPIO17
TP81
TP75
DEVSEL# FRAME# IRDY# TRDY# STOP# PAR PERR# PCICLK PCIRST# PLOCK# SERR# PME# CLKRUN#/GPIO24
20,22,23 P_DEVSEL-
20,22,23 P_FRAME-
20,22,23 P_IRDY-
20,22,23 P_TRDY-
20,22,23 P_STOP-
20,22,23 P_PAR
20,22,23 P_PERR-
14 PCICLK
20,22,23 P_SERR-
20,22,23,27 P_PME-
20,23,26 P_CLKRUN-
PCICLK
C639
10PF_NC
close chip
For EMI
INTRUDER# SMLINK0 SMLINK1 SMBDATA SMBCLK SMBALERT#/GPIO11
W6 AC3 AB1 AB4 AC4 AA5
SM_INTRUDER-
SMLINK0
SMLINK1
SMBDATA 12,14
SMBCLK 12,14
SMBALERT-
A20M# CPUSLP# FERR# IGNNE# INIT# INTR NMI SMI# STPCLK# RCIN# A20GATE CPUPWRGD DPSLP#
VCCP
R165 56
R162 56
R153 0
A20M- 2
CPUSLP- 2
FERR- 2
IGNNE- 2
INIT- 2
INTR 2
NMI 2
SMI- 2
STPCLK- 2
CPU_RCIN- 26
CPU_A20GATE 26
CPU_PWRGD 2
H_DPSLP- 2,5
HUB_PAD[0..10] 7
HI0 … HI11
HUB_PAD0 … HUB_PAD10
HUB_PD11
TP85
CLK66
HUB_CLK66 14
HI_STB/HI_STBS
HI_STB#/HISTBF
HICOMP
HI_VSWING
HIREF
HUB_STB 7
HUB_STB- 7
HICOMP
R155 36.5_1%
< 0.5"
H_HIREF
PIRQA# PIRQB# PIRQC# PIRQD# PIRQE#/GPIO2 PIRQF#/GPIO3 PIRQG#/GPIO4 PIRQH#/GPIO5 IRQ14 IRQ15 APICCLK APICD0 APICD1 SERIRQ
INT_PIRQA- 9
INT_PIRQB- 23
INT_PIRQC- 23
INT_PIRQE- 20
INT_PIRQF- 20
INT_PIRQG- 22
INT_IRQ14 24
INT_IRQ15 24
INT_APICCLK
INT_APICD0
INT_APICD1
INT_SERIRQ 20,26,27
C776
47PF_NC
EE_SHCLK EE_DIN EE_DOUT EE_CS
TP32
LAN_RXD0 LAN_RXD1 LAN_RXD2 LAN_TXD0 LAN_TXD1 LAN_TXD2 LAN_CLK LAN_RSTSYNC LAN_RST#
LAN_CLK_SB
LAN_RST-
TP34 TP74 TP35 TP25 TP23 TP36 TP24 TP21
+3VAUX
SM_INTRUDER- R184 0
SMLINK0 R181 10K
SMLINK1 R163 10K
SMBALERT- R193 10K
SMBDATA R192 10K
SMBCLK R182 10K
VCCA_1.8
< 1" to chip CHIP
R143 150_1%
R145 150_1%
C286 0.01UF
C290 0.01UF
INT_APICCLK R416 0
INT_APICD0 R415 10K
INT_APICD1 R134 10K
LAN_RST- R188 10K
U13
NC7S08_SOT23-5
PCI_RST-
PCIRST- 7,9,20,22,23,24,26,27

ECS CORPORATION

Title G551 ICH4-M-1

Size B
Document Number G551-1-4-01
Rev 1.0

Date: Thursday, May 29, 2003
Sheet 17 of 36

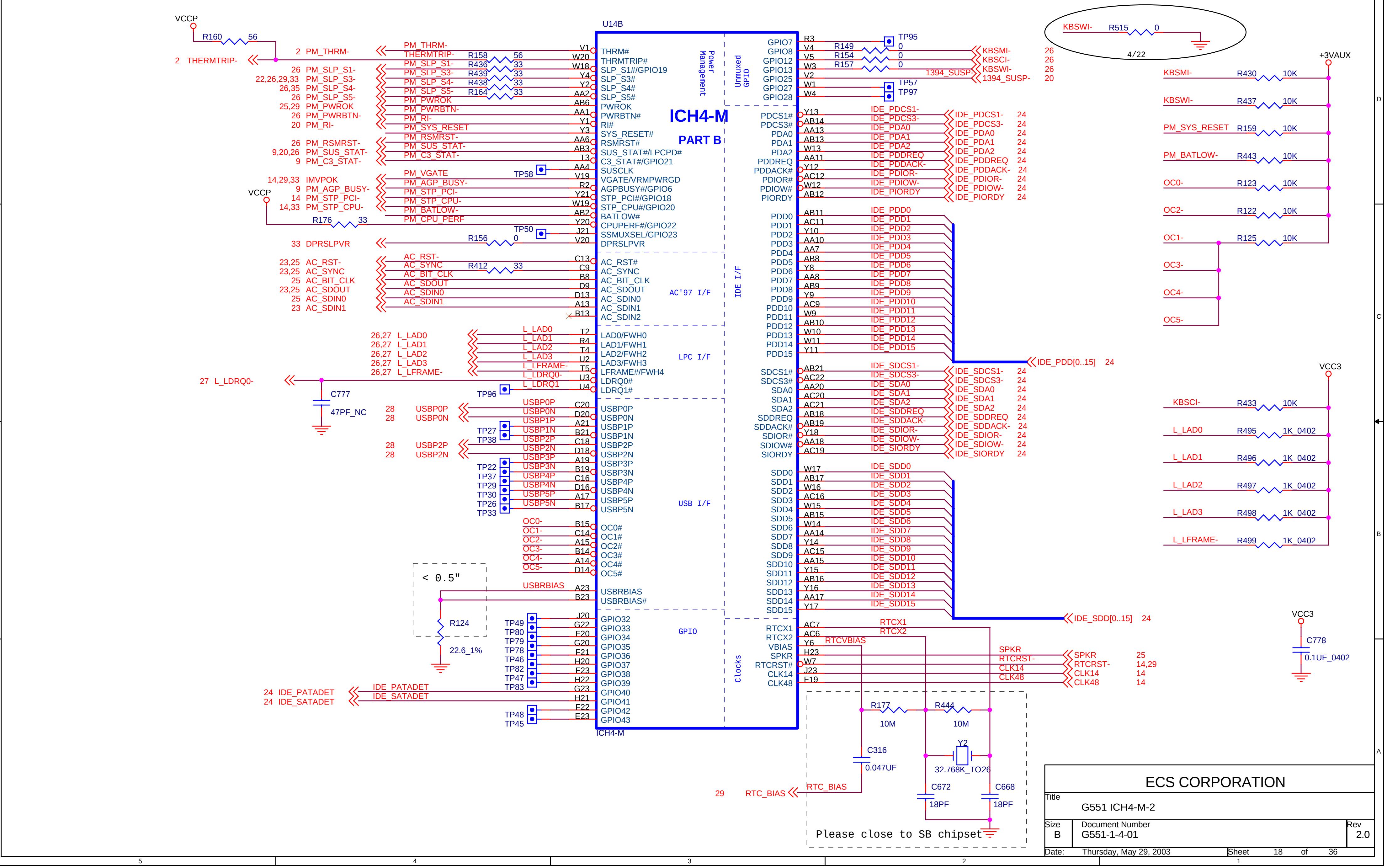

ICH4-M
PART B
U14B
VCCP
R160 56
2 PM_THRM-
2 THERMTRIP-
26 PM_SLP_S1-
22,26,29,33 PM_SLP_S3-
26,35 PM_SLP_S4-
26 PM_SLP_S5-
25,29 PM_PWROK
26 PM_PWRBTN-
20 PM_RI-
26 PM_RSMRST-
9,20,26 PM_SUS_STAT-
9 PM_C3_STAT-
14,29,33 IMVPOK
9 PM_AGP_BUSY-
14 PM_STP_PCI-
14,33 PM_STP_CPU-
R176 33
33 DPRSLPVR
R158 56
R436 33
R439 33
R438 33
R164 33
TP58
TP50
R156 0
23,25 AC_RST-
23,25 AC_SYNC
25 AC_BIT_CLK
23,25 AC_SDOUT
25 AC_SDIN0
23 AC_SDIN1
R412 33
26,27 L_LAD0
26,27 L_LAD1
26,27 L_LAD2
26,27 L_LAD3
26,27 L_LFRAME-
27 L_LDRQ0-
C777
47PF_NC
TP96
28 USBP0P
28 USBP0N
28 USBP2P
28 USBP2N
TP27
TP38
TP22
TP37
TP29
TP30
TP26
TP33
OC0- OC1- OC2- OC3- OC4- OC5-
< 0.5"
USBRBIAS
R124
22.6_1%
TP49 TP80 TP79 TP78 TP46 TP82 TP47 TP83
24 IDE_PATADET
24 IDE_SATADET
TP48 TP45
THRM#
THRMTRIP#
SLP_S1#/GPIO19
SLP_S3#
SLP_S4#
SLP_S5#
PWROK
PWRBTN#
RI#
SYS_RESET#
RSMRST#
SUS_STAT#/LPCPD#
C3_STAT#/GPIO21
SUSCLK
VGATE/VRMPWRGD
AGPBUSY#/GPIO6
STP_PCI#/GPIO18
STP_CPU#/GPIO20
BATLOW#
CPUPERF#/GPIO22
SSMUXSEL/GPIO23
DPRSLPVR
Power Management
AC_RST#
AC_SYNC
AC_BIT_CLK
AC_SDOUT
AC_SDIN0
AC_SDIN1
AC_SDIN2
AC'97 I/F
LAD0/FWH0
LAD1/FWH1
LAD2/FWH2
LAD3/FWH3
LFRAME#/FWH4
LDRQ0#
LDRQ1#
LPC I/F
USBP0P USBP0N USBP1P USBP1N USBP2P USBP2N USBP3P USBP3N USBP4P USBP4N USBP5P USBP5N
USB I/F
OC0# OC1# OC2# OC3# OC4# OC5#
USBRBIAS
USBRBIAS#
GPIO32 GPIO33 GPIO34 GPIO35 GPIO36 GPIO37 GPIO38 GPIO39 GPIO40 GPIO41 GPIO42 GPIO43
GPIO
Unmuxed GPIO
GPIO7 GPIO8 GPIO12 GPIO13 GPIO25 GPIO27 GPIO28
PDCS1# PDCS3# PDA0 PDA1 PDA2 PDDREQ PDDACK# PDIOR# PDIOW# PIORDY
PDD0 … PDD15
SDCS1# SDCS3# SDA0 SDA1 SDA2 SDDREQ SDDACK# SDIOR# SDIOW# SIORDY
SDD0 … SDD15
IDE I/F
RTCX1 RTCX2 VBIAS SPKR RTCRST# CLK14 CLK48
Clocks
TP95
R149 0
R154 0
R157 0
26 KBSMI-
26 KBSCI-
26 KBSWI-
20 1394_SUSP-
TP57
TP97
24 IDE_PDCS1-
24 IDE_PDCS3-
24 IDE_PDA0
24 IDE_PDA1
24 IDE_PDA2
24 IDE_PDDREQ
24 IDE_PDDACK-
24 IDE_PDIOR-
24 IDE_PDIOW-
24 IDE_PIORDY
IDE_PDD[0..15] 24
24 IDE_SDCS1-
24 IDE_SDCS3-
24 IDE_SDA0
24 IDE_SDA1
24 IDE_SDA2
24 IDE_SDDREQ
24 IDE_SDDACK-
24 IDE_SDIOR-
24 IDE_SDIOW-
24 IDE_SIORDY
IDE_SDD[0..15] 24
RTCX1
RTCX2
RTCVBIAS
25 SPKR
14,29 RTCRST-
14 CLK14
14 CLK48
R177 10M
R444 10M
C316 0.047UF
Y2 32.768K_TO26
C672 18PF
C668 18PF
29 RTC_BIAS
Please close to SB chipset
KBSWI- R515 0
4/22
+3VAUX
KBSMI- R430 10K
KBSWI- R437 10K
PM_SYS_RESET R159 10K
PM_BATLOW- R443 10K
OC0- R123 10K
OC2- R122 10K
OC1- R125 10K
OC3-
OC4-
OC5-
VCC3
KBSCI- R433 10K
L_LAD0 R495 1K_0402
L_LAD1 R496 1K_0402
L_LAD2 R497 1K_0402
L_LAD3 R498 1K_0402
L_LFRAME- R499 1K_0402
VCC3
C778 0.1UF_0402

ECS CORPORATION

Title
G551 ICH4-M-2

| Size | Document Number | Rev |
|---|---|---|
| B | G551-1-4-01 | 2.0 |

Date: Thursday, May 29, 2003 Sheet 18 of 36

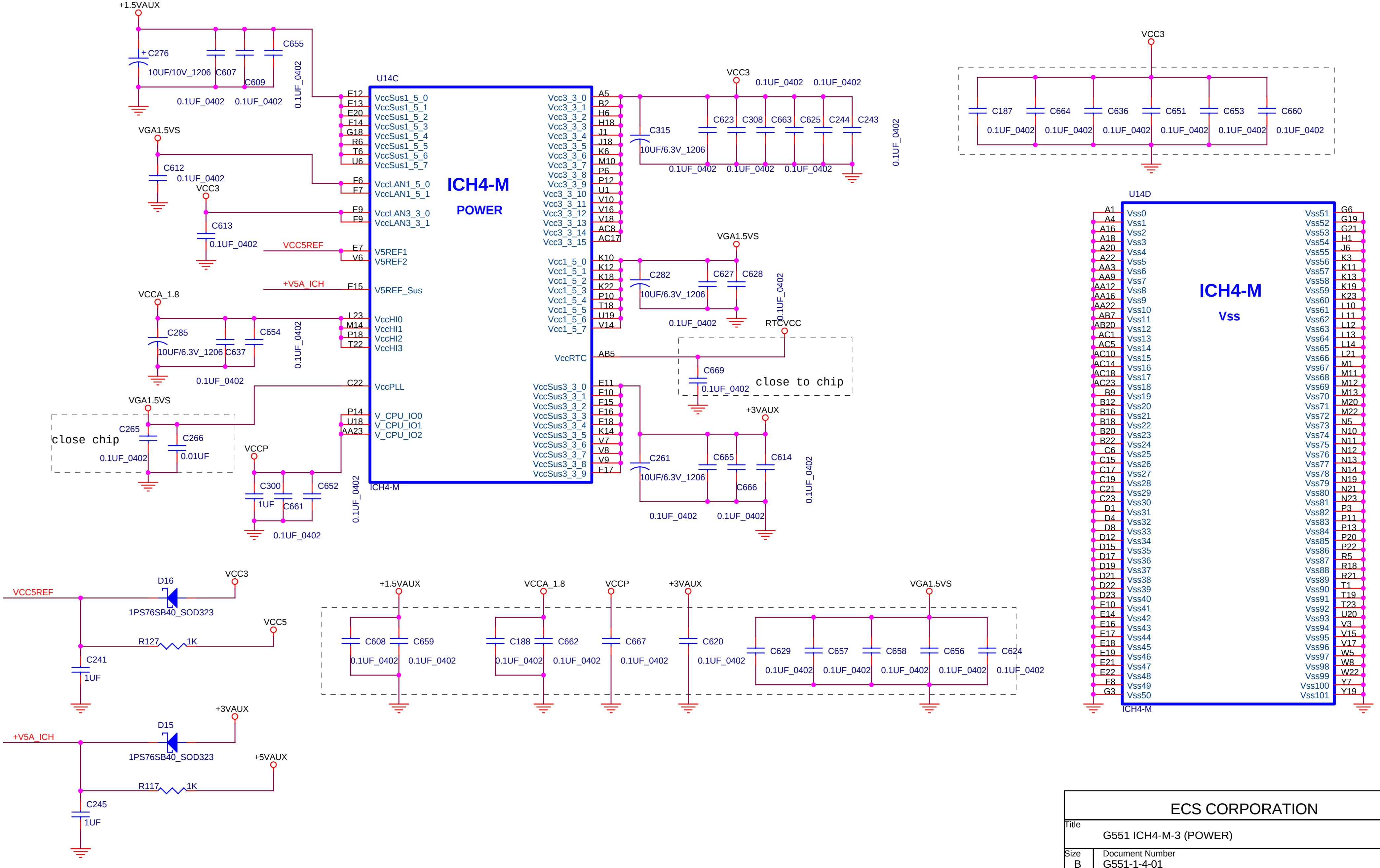
+1.5VAUX
C276
10UF/10V_1206
C607
C609
C655
0.1UF_0402
0.1UF_0402
0.1UF_0402
VGA1.5VS
C612
0.1UF_0402
VCC3
C613
0.1UF_0402
VCC5REF
+V5A_ICH
VCCA_1.8
C285
10UF/6.3V_1206
C637
C654
0.1UF_0402
0.1UF_0402
VGA1.5VS
close chip
C265
C266
0.1UF_0402
0.01UF
VCCP
C300
1UF
C661
C652
0.1UF_0402
0.1UF_0402
U14C
E12 VccSus1_5_0
E13 VccSus1_5_1
E20 VccSus1_5_2
F14 VccSus1_5_3
G18 VccSus1_5_4
R6 VccSus1_5_5
T6 VccSus1_5_6
U6 VccSus1_5_7
F6 VccLAN1_5_0
F7 VccLAN1_5_1
E9 VccLAN3_3_0
F9 VccLAN3_3_1
E7 V5REF1
V6 V5REF2
E15 V5REF_Sus
L23 VccHI0
M14 VccHI1
P18 VccHI2
T22 VccHI3
C22 VccPLL
P14 V_CPU_IO0
U18 V_CPU_IO1
AA23 V_CPU_IO2
ICH4-M
POWER
Vcc3_3_0 A5
Vcc3_3_1 B2
Vcc3_3_2 H6
Vcc3_3_3 H18
Vcc3_3_4 J1
Vcc3_3_5 J18
Vcc3_3_6 K6
Vcc3_3_7 M10
Vcc3_3_8 P6
Vcc3_3_9 P12
Vcc3_3_10 U1
Vcc3_3_11 V10
Vcc3_3_12 V16
Vcc3_3_13 V18
Vcc3_3_14 AC8
Vcc3_3_15 AC17
Vcc1_5_0 K10
Vcc1_5_1 K12
Vcc1_5_2 K18
Vcc1_5_3 K22
Vcc1_5_4 P10
Vcc1_5_5 T18
Vcc1_5_6 U19
Vcc1_5_7 V14
VccRTC AB5
VccSus3_3_0 E11
VccSus3_3_1 F10
VccSus3_3_2 F15
VccSus3_3_3 F16
VccSus3_3_4 F18
VccSus3_3_5 K14
VccSus3_3_6 V7
VccSus3_3_7 V8
VccSus3_3_8 V9
VccSus3_3_9 F17
ICH4-M
VCC3
C315
10UF/6.3V_1206
C623
C308
C663
C625
C244
C243
0.1UF_0402
0.1UF_0402
0.1UF_0402
0.1UF_0402
0.1UF_0402
0.1UF_0402
VGA1.5VS
C282
10UF/6.3V_1206
C627
C628
0.1UF_0402
0.1UF_0402
RTCVCC
C669
0.1UF_0402
close to chip
+3VAUX
C261
10UF/6.3V_1206
C665
C666
C614
0.1UF_0402
0.1UF_0402
0.1UF_0402
VCC3
C187
C664
C636
C651
C653
C660
0.1UF_0402
0.1UF_0402
0.1UF_0402
0.1UF_0402
0.1UF_0402
0.1UF_0402
U14D
ICH4-M
Vss
A1 Vss0
A4 Vss1
A16 Vss2
A18 Vss3
A20 Vss4
A22 Vss5
AA3 Vss6
AA9 Vss7
AA12 Vss8
AA16 Vss9
AA22 Vss10
AB7 Vss11
AB20 Vss12
AC1 Vss13
AC5 Vss14
AC10 Vss15
AC14 Vss16
AC18 Vss17
AC23 Vss18
B9 Vss19
B12 Vss20
B16 Vss21
B18 Vss22
B20 Vss23
B22 Vss24
C6 Vss25
C15 Vss26
C17 Vss27
C19 Vss28
C21 Vss29
C23 Vss30
D1 Vss31
D4 Vss32
D8 Vss33
D12 Vss34
D15 Vss35
D17 Vss36
D19 Vss37
D21 Vss38
D22 Vss39
D23 Vss40
E10 Vss41
E14 Vss42
E16 Vss43
E17 Vss44
E18 Vss45
E19 Vss46
E21 Vss47
E22 Vss48
F8 Vss49
G3 Vss50
Vss51 G6
Vss52 G19
Vss53 G21
Vss54 H1
Vss55 J6
Vss56 K3
Vss57 K11
Vss58 K13
Vss59 K19
Vss60 K23
Vss61 L10
Vss62 L11
Vss63 L12
Vss64 L13
Vss65 L14
Vss66 L21
Vss67 M1
Vss68 M11
Vss69 M12
Vss70 M13
Vss71 M20
Vss72 M22
Vss73 N5
Vss74 N10
Vss75 N11
Vss76 N12
Vss77 N13
Vss78 N14
Vss79 N19
Vss80 N21
Vss81 N23
Vss82 P3
Vss83 P11
Vss84 P13
Vss85 P20
Vss86 P22
Vss87 R5
Vss88 R18
Vss89 R21
Vss90 T1
Vss91 T19
Vss92 T23
Vss93 U20
Vss94 V3
Vss95 V15
Vss96 V17
Vss97 W5
Vss98 W8
Vss99 W22
Vss100 Y7
Vss101 Y19
ICH4-M
VCC5REF
D16
1PS76SB40_SOD323
VCC3
VCC5
R127
1K
C241
1UF
+V5A_ICH
D15
1PS76SB40_SOD323
+3VAUX
+5VAUX
R117
1K
C245
1UF
+1.5VAUX
C608
C659
0.1UF_0402
0.1UF_0402
VCCA_1.8
C188
C662
0.1UF_0402
0.1UF_0402
VCCP
C667
0.1UF_0402
+3VAUX
C620
0.1UF_0402
VGA1.5VS
C629
C657
C658
C656
C624
0.1UF_0402
0.1UF_0402
0.1UF_0402
0.1UF_0402
0.1UF_0402
5
4
3
2
1
D
C
B
A

| ECS CORPORATION | | |
|---|---|---|
| Title<br>G551 ICH4-M-3 (POWER) | | |
| Size<br>B | Document Number<br>G551-1-4-01 | Rev<br>1.0 |
| Date: Thursday, May 29, 2003 | Sheet 19 of 36 | |

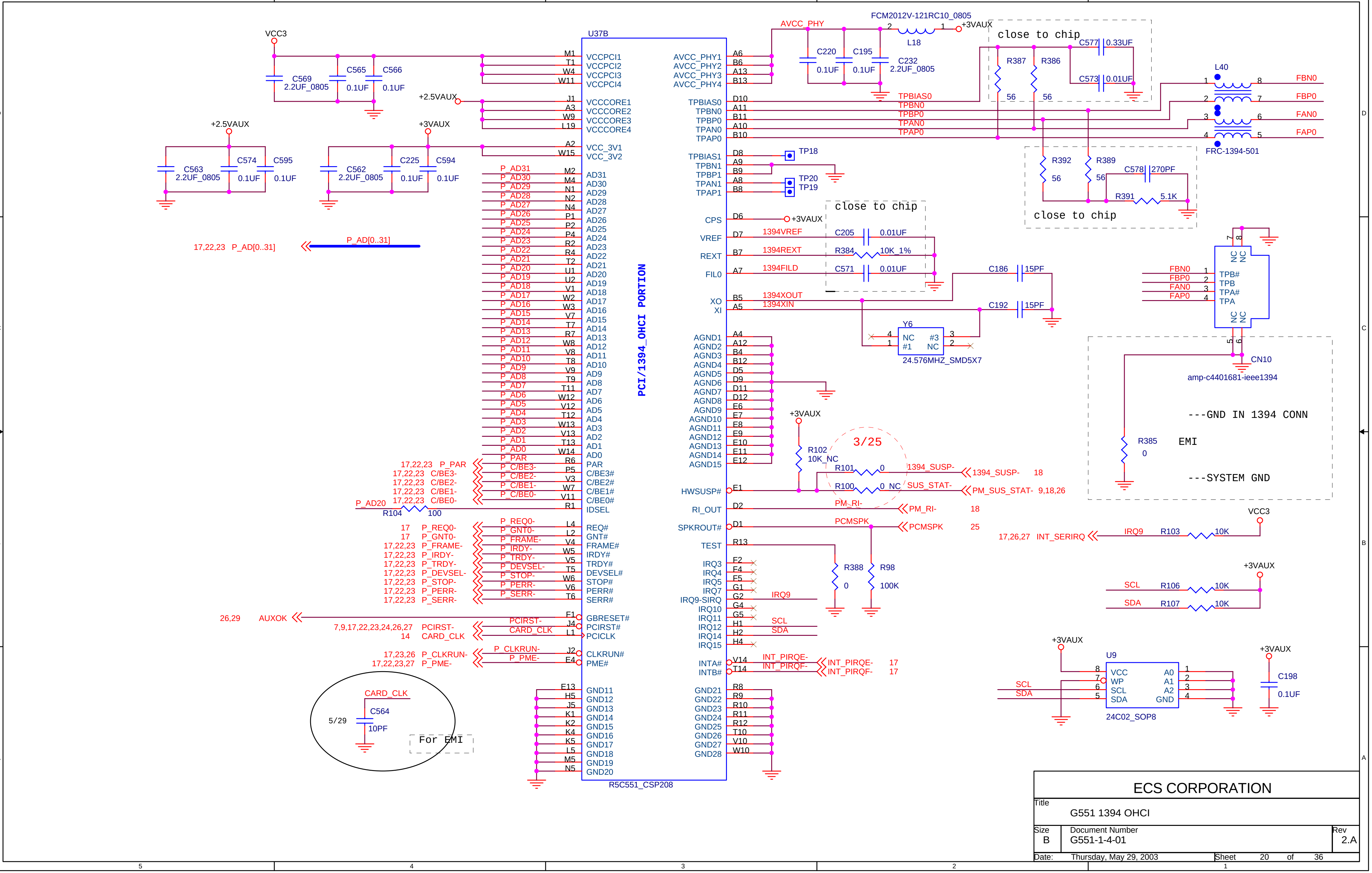
U37B
PCI/1394_OHCI PORTION
R5C551_CSP208
VCC3
C569 2.2UF_0805
C565 0.1UF
C566 0.1UF
+2.5VAUX
+3VAUX
C563 2.2UF_0805
C574 0.1UF
C595 0.1UF
C562 2.2UF_0805
C225 0.1UF
C594 0.1UF
VCCPCI1
VCCPCI2
VCCPCI3
VCCPCI4
VCCCORE1
VCCCORE2
VCCCORE3
VCCCORE4
VCC_3V1
VCC_3V2
P_AD[0..31]
17,22,23 P_AD[0..31]
AD31
AD30
AD29
AD28
AD27
AD26
AD25
AD24
AD23
AD22
AD21
AD20
AD19
AD18
AD17
AD16
AD15
AD14
AD13
AD12
AD11
AD10
AD9
AD8
AD7
AD6
AD5
AD4
AD3
AD2
AD1
AD0
PAR
C/BE3#
C/BE2#
C/BE1#
C/BE0#
IDSEL
17,22,23 P_PAR
17,22,23 C/BE3-
17,22,23 C/BE2-
17,22,23 C/BE1-
17,22,23 C/BE0-
P_AD20
R104 100
REQ#
GNT#
FRAME#
IRDY#
TRDY#
DEVSEL#
STOP#
PERR#
SERR#
17 P_REQ0-
17 P_GNT0-
17,22,23 P_FRAME-
17,22,23 P_IRDY-
17,22,23 P_TRDY-
17,22,23 P_DEVSEL-
17,22,23 P_STOP-
17,22,23 P_PERR-
17,22,23 P_SERR-
GBRESET#
PCIRST#
PCICLK
26,29 AUXOK
7,9,17,22,23,24,26,27 PCIRST-
14 CARD_CLK
CLKRUN#
PME#
17,23,26 P_CLKRUN-
17,22,23,27 P_PME-
GND11
GND12
GND13
GND14
GND15
GND16
GND17
GND18
GND19
GND20
CARD_CLK
C564 10PF
5/29
For EMI
AVCC_PHY
FCM2012V-121RC10_0805
L18
C220 0.1UF
C195 0.1UF
C232 2.2UF_0805
AVCC_PHY1
AVCC_PHY2
AVCC_PHY3
AVCC_PHY4
TPBIAS0
TPBN0
TPBP0
TPAN0
TPAP0
TPBIAS1
TPBN1
TPBP1
TPAN1
TPAP1
TP18
TP20
TP19
close to chip
R387 56
R386 56
C577 0.33UF
C573 0.01UF
R392 56
R389 56
C578 270PF
R391 5.1K
L40
FRC-1394-501
FBN0
FBP0
FAN0
FAP0
CPS
VREF
REXT
FIL0
XO
XI
1394VREF
1394REXT
1394FILD
1394XOUT
1394XIN
C205 0.01UF
R384 10K_1%
C571 0.01UF
C186 15PF
C192 15PF
Y6
24.576MHZ_SMD5X7
AGND1
AGND2
AGND3
AGND4
AGND5
AGND6
AGND7
AGND8
AGND9
AGND10
AGND11
AGND12
AGND13
AGND14
AGND15
HWSUSP#
RI_OUT
SPKROUT#
TEST
R102 10K_NC
3/25
R101 0
R100 0_NC
1394_SUSP-
SUS_STAT-
1394_SUSP- 18
PM_SUS_STAT- 9,18,26
PM_RI- 18
PCMSPK 25
R388 0
R98 100K
IRQ3
IRQ4
IRQ5
IRQ7
IRQ9-SIRQ
IRQ10
IRQ11
IRQ12
IRQ14
IRQ15
IRQ9
SCL
SDA
INTA#
INTB#
INT_PIRQE- 17
INT_PIRQF- 17
GND21
GND22
GND23
GND24
GND25
GND26
GND27
GND28
TPB#
TPB
TPA#
TPA
NC
CN10
amp-c4401681-ieee1394
R385 0
---GND IN 1394 CONN
EMI
---SYSTEM GND
17,26,27 INT_SERIRQ
R103 10K
R106 10K
R107 10K
U9
24C02_SOP8
VCC
WP
A0
A1
A2
GND
C198 0.1UF

ECS CORPORATION

Title
G551 1394 OHCI

Size B
Document Number G551-1-4-01
Rev 2.A

Date: Thursday, May 29, 2003
Sheet 20 of 36

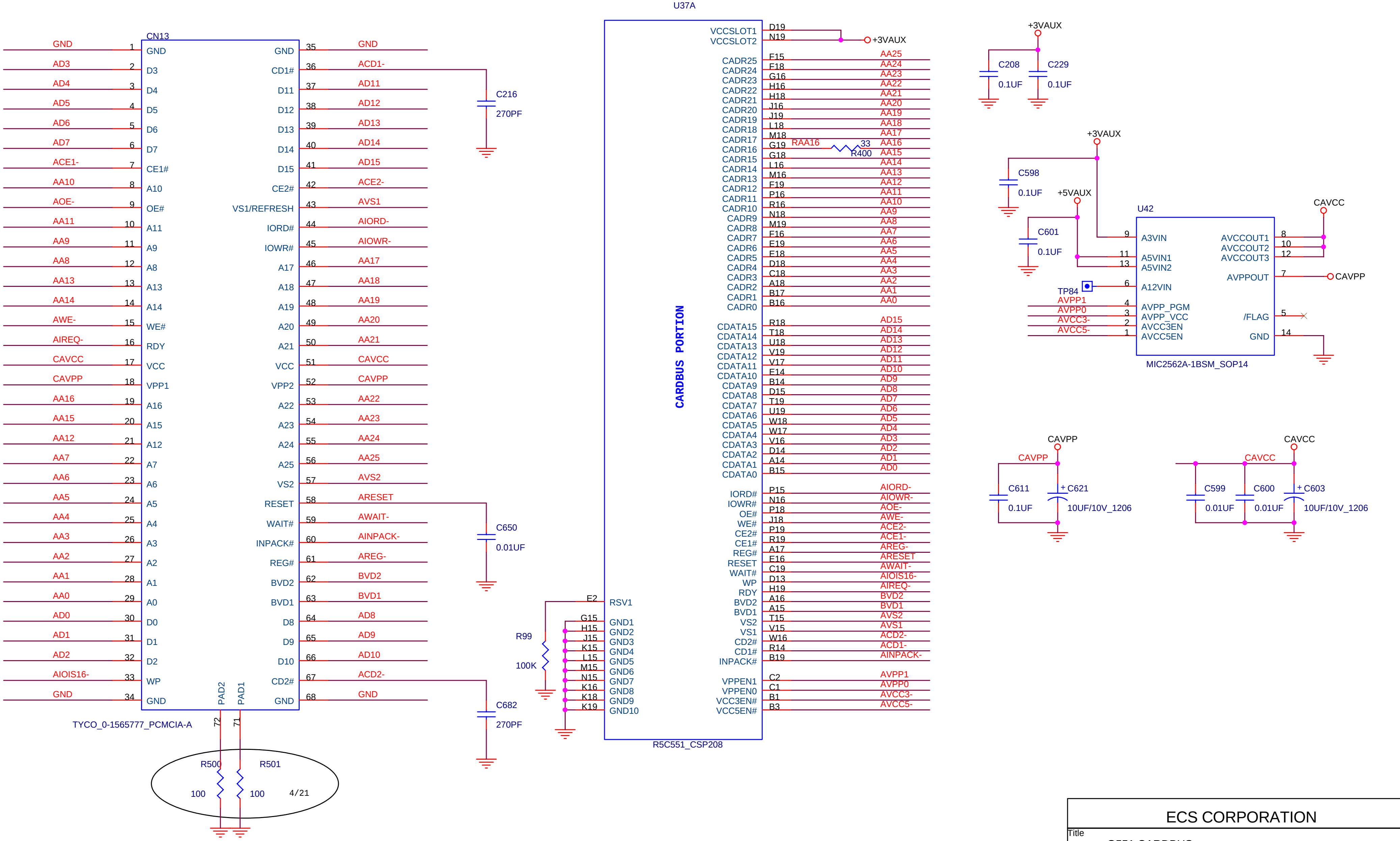
CN13
GND 1 GND — GND 35 GND
AD3 2 D3 — CD1# 36 ACD1-
AD4 3 D4 — D11 37 AD11
AD5 4 D5 — D12 38 AD12
AD6 5 D6 — D13 39 AD13
AD7 6 D7 — D14 40 AD14
ACE1- 7 CE1# — D15 41 AD15
AA10 8 A10 — CE2# 42 ACE2-
AOE- 9 OE# — VS1/REFRESH 43 AVS1
AA11 10 A11 — IORD# 44 AIORD-
AA9 11 A9 — IOWR# 45 AIOWR-
AA8 12 A8 — A17 46 AA17
AA13 13 A13 — A18 47 AA18
AA14 14 A14 — A19 48 AA19
AWE- 15 WE# — A20 49 AA20
AIREQ- 16 RDY — A21 50 AA21
CAVCC 17 VCC — VCC 51 CAVCC
CAVPP 18 VPP1 — VPP2 52 CAVPP
AA16 19 A16 — A22 53 AA22
AA15 20 A15 — A23 54 AA23
AA12 21 A12 — A24 55 AA24
AA7 22 A7 — A25 56 AA25
AA6 23 A6 — VS2 57 AVS2
AA5 24 A5 — RESET 58 ARESET
AA4 25 A4 — WAIT# 59 AWAIT-
AA3 26 A3 — INPACK# 60 AINPACK-
AA2 27 A2 — REG# 61 AREG-
AA1 28 A1 — BVD2 62 BVD2
AA0 29 A0 — BVD1 63 BVD1
AD0 30 D0 — D8 64 AD8
AD1 31 D1 — D9 65 AD9
AD2 32 D2 — D10 66 AD10
AIOIS16- 33 WP — CD2# 67 ACD2-
GND 34 GND — GND 68 GND
PAD2 72
PAD1 71
TYCO_0-1565777_PCMCIA-A
R500 100
R501 100
4/21
C216 270PF
C650 0.01UF
C682 270PF
R99 100K
U37A
CARDBUS PORTION
R5C551_CSP208
E2 RSV1
G15 GND1
H15 GND2
J15 GND3
K15 GND4
L15 GND5
M15 GND6
N15 GND7
K16 GND8
K18 GND9
K19 GND10
VCCSLOT1 D19
VCCSLOT2 N19 +3VAUX
CADR25 F15 AA25
CADR24 F18 AA24
CADR23 G16 AA23
CADR22 H16 AA22
CADR21 H18 AA21
CADR20 J16 AA20
CADR19 J19 AA19
CADR18 L18 AA18
CADR17 M18 AA17
CADR16 G19 RAA16 33 R400 AA16
CADR15 G18 AA15
CADR14 L16 AA14
CADR13 M16 AA13
CADR12 F19 AA12
CADR11 P16 AA11
CADR10 R16 AA10
CADR9 N18 AA9
CADR8 M19 AA8
CADR7 F16 AA7
CADR6 E19 AA6
CADR5 E18 AA5
CADR4 D18 AA4
CADR3 C18 AA3
CADR2 A18 AA2
CADR1 B17 AA1
CADR0 B16 AA0
CDATA15 R18 AD15
CDATA14 T18 AD14
CDATA13 U18 AD13
CDATA12 V19 AD12
CDATA11 V17 AD11
CDATA10 E14 AD10
CDATA9 B14 AD9
CDATA8 D15 AD8
CDATA7 T19 AD7
CDATA6 U19 AD6
CDATA5 W18 AD5
CDATA4 W17 AD4
CDATA3 V16 AD3
CDATA2 D14 AD2
CDATA1 A14 AD1
CDATA0 B15 AD0
IORD# P15 AIORD-
IOWR# N16 AIOWR-
OE# P18 AOE-
WE# J18 AWE-
CE2# P19 ACE2-
CE1# R19 ACE1-
REG# A17 AREG-
RESET E16 ARESET
WAIT# C19 AWAIT-
WP D13 AIOIS16-
RDY H19 AIREQ-
BVD2 A16 BVD2
BVD1 A15 BVD1
VS2 T15 AVS2
VS1 V15 AVS1
CD2# W16 ACD2-
CD1# R14 ACD1-
INPACK# B19 AINPACK-
VPPEN1 C2 AVPP1
VPPEN0 C1 AVPP0
VCC3EN# B1 AVCC3-
VCC5EN# B3 AVCC5-
+3VAUX
C208 0.1UF
C229 0.1UF
+3VAUX
C598 0.1UF
+5VAUX
C601 0.1UF
U42
9 A3VIN
11 A5VIN1
13 A5VIN2
TP84
6 A12VIN
AVPP1 4 AVPP_PGM
AVPP0 3 AVPP_VCC
AVCC3- 2 AVCC3EN
AVCC5- 1 AVCC5EN
AVCCOUT1 8
AVCCOUT2 10
AVCCOUT3 12
CAVCC
AVPPOUT 7 CAVPP
/FLAG 5
GND 14
MIC2562A-1BSM_SOP14
CAVPP
CAVPP
C611 0.1UF
C621 10UF/10V_1206
CAVCC
CAVCC
C599 0.01UF
C600 0.01UF
C603 10UF/10V_1206

ECS CORPORATION

Title
G551 CARDBUS

| Size | Document Number | Rev |
|---|---|---|
| B | G551-1-4-01 | 2.0 |

Date: Thursday, May 29, 2003 Sheet 21 of 36

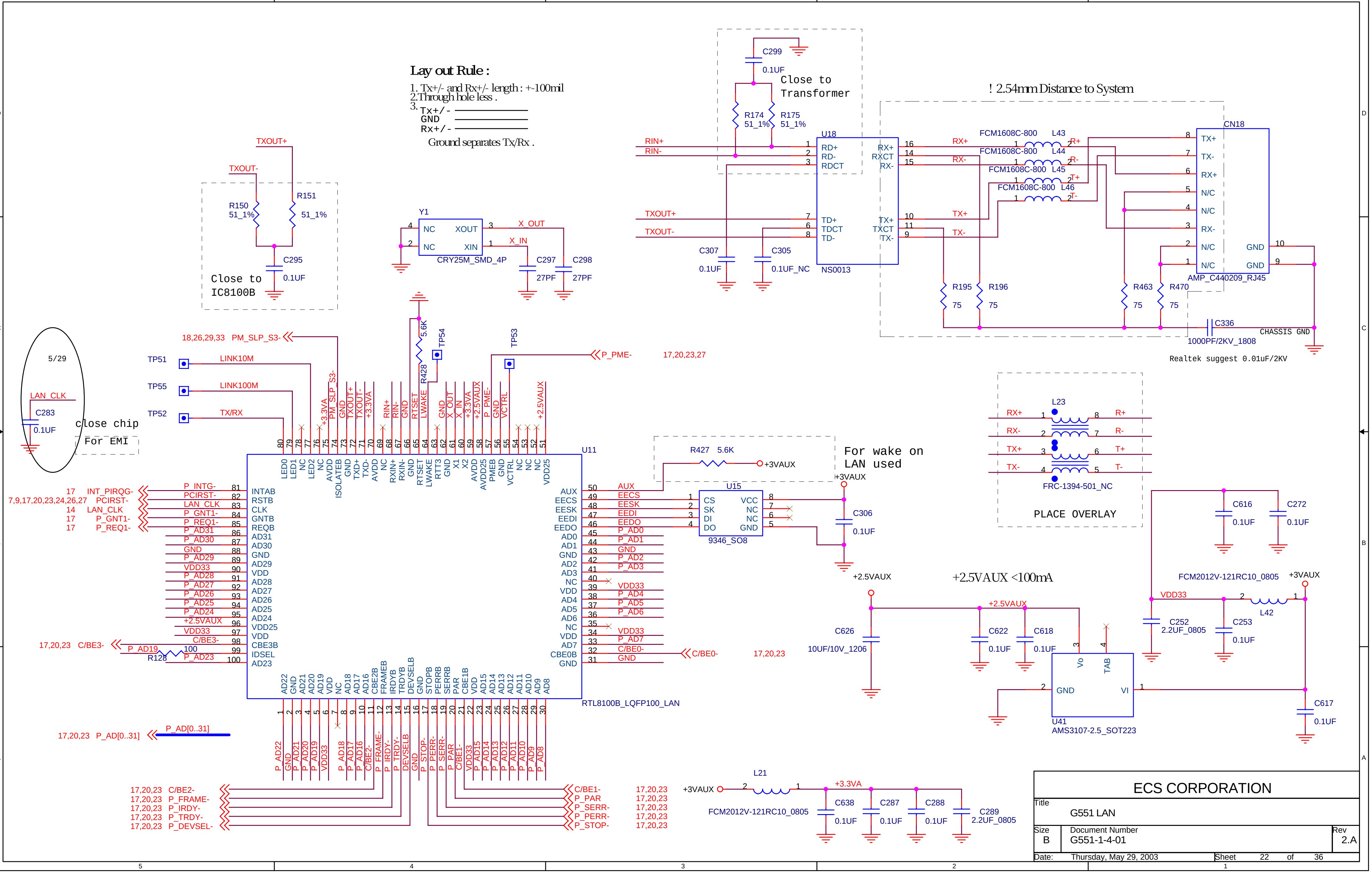
U11
RTL8100B_LQFP100_LAN
U18
NS0013
U15
9346_SO8
U41
AMS3107-2.5_SOT223
Y1
CRY25M_SMD_4P
CN18
AMP_C440209_RJ45
FRC-1394-501_NC
TP51 LINK10M
TP55 LINK100M
TP52 TX/RX
TP54
TP53
R150 51_1%
R151 51_1%
C295 0.1UF
R174 51_1%
R175 51_1%
C299 0.1UF
C307 0.1UF
C305 0.1UF_NC
C297 27PF
C298 27PF
R428 5.6K
R427 5.6K
R195 75
R196 75
R463 75
R470 75
C336 1000PF/2KV_1808
CHASSIS GND
FCM1608C-800 L43
FCM1608C-800 L44
FCM1608C-800 L45
FCM1608C-800 L46
L23
C283 0.1UF
LAN_CLK
C306 0.1UF
C626 10UF/10V_1206
C622 0.1UF
C618 0.1UF
C252 2.2UF_0805
C253 0.1UF
C616 0.1UF
C272 0.1UF
C617 0.1UF
FCM2012V-121RC10_0805 L42
L21 FCM2012V-121RC10_0805
C638 0.1UF
C287 0.1UF
C288 0.1UF
C289 2.2UF_0805
+3VAUX
+2.5VAUX
+3.3VA
VDD33
R128
TXOUT+
TXOUT-
RIN+
RIN-
RX+
RX-
TX+
TX-
R+
R-
T+
T-
X_OUT
X_IN
18,26,29,33 PM_SLP_S3-
P_PME- 17,20,23,27
17 INT_PIRQG- P_INTG-
7,9,17,20,23,24,26,27 PCIRST- PCIRST-
14 LAN_CLK LAN_CLK
17 P_GNT1- P_GNT1-
17 P_REQ1- P_REQ1-
17,20,23 C/BE3- C/BE3-
17,20,23 P_AD[0..31] P_AD[0..31]
C/BE0- 17,20,23
17,20,23 C/BE2-
17,20,23 P_FRAME-
17,20,23 P_IRDY-
17,20,23 P_TRDY-
17,20,23 P_DEVSEL-
C/BE1- 17,20,23
P_PAR 17,20,23
P_SERR- 17,20,23
P_PERR- 17,20,23
P_STOP- 17,20,23
AUX EECS EESK EEDI EEDO
INTAB RSTB CLK GNTB REQB IDSEL CBE3B
ISOLATEB LWAKE RTSET RTT3 PMEB VCTRL
5/29

Lay out Rule :

1. Tx+/- and Rx+/- length : +-100mil
2.Through hole less .
3. Tx+/- ________
GND ________
Rx+/- ________

Ground separates Tx/Rx .

Close to Transformer

! 2.54mm Distance to System

Realtek suggest 0.01uF/2KV

Close to IC8100B

close chip For EMI

For wake on LAN used

PLACE OVERLAY

+2.5VAUX <100mA

## ECS CORPORATION

| | | |
|---|---|---|
| Title | G551 LAN | |
| Size B | Document Number G551-1-4-01 | Rev 2.A |
| Date: | Thursday, May 29, 2003 | Sheet 22 of 36 |

# MINI PCI SOCKET

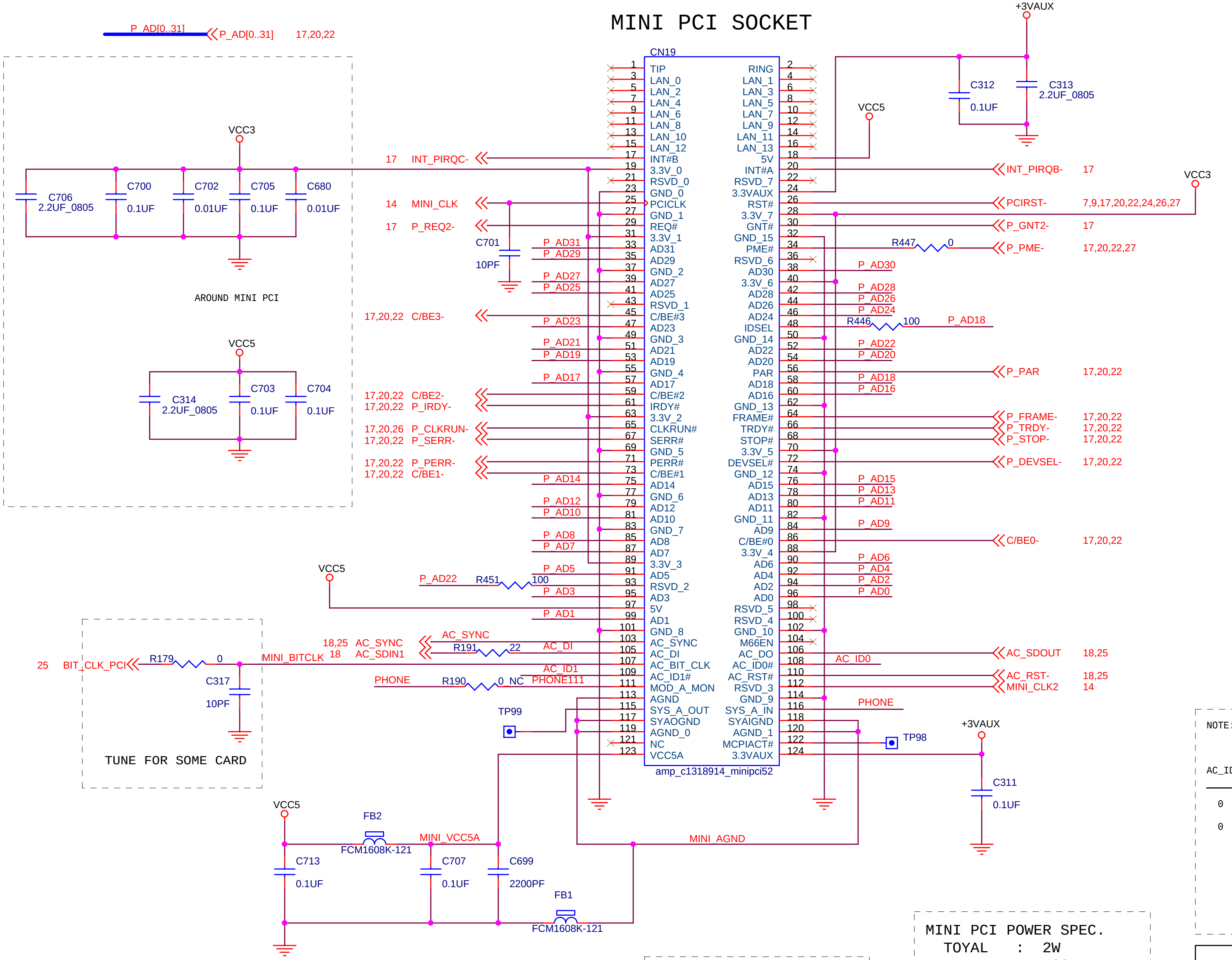
P_AD[0..31]
P_AD[0..31] 17,20,22
AROUND MINI PCI
VCC3
C706 2.2UF_0805
C700 0.1UF
C702 0.01UF
C705 0.1UF
C680 0.01UF
VCC5
C314 2.2UF_0805
C703 0.1UF
C704 0.1UF
CN19
amp_c1318914_minipci52
TIP
LAN_0
LAN_2
LAN_4
LAN_6
LAN_8
LAN_10
LAN_12
INT#B
3.3V_0
RSVD_0
GND_0
PCICLK
GND_1
REQ#
3.3V_1
AD31
AD29
GND_2
AD27
AD25
RSVD_1
C/BE#3
AD23
GND_3
AD21
AD19
GND_4
AD17
C/BE#2
IRDY#
3.3V_2
CLKRUN#
SERR#
GND_5
PERR#
C/BE#1
AD14
GND_6
AD12
AD10
GND_7
AD8
AD7
3.3V_3
AD5
RSVD_2
AD3
5V
AD1
GND_8
AC_SYNC
AC_DI
AC_BIT_CLK
AC_ID1#
MOD_A_MON
AGND
SYS_A_OUT
SYAOGND
AGND_0
NC
VCC5A
RING
LAN_1
LAN_3
LAN_5
LAN_7
LAN_9
LAN_11
LAN_13
5V
INT#A
RSVD_7
3.3VAUX
RST#
3.3V_7
GNT#
GND_15
PME#
RSVD_6
AD30
3.3V_6
AD28
AD26
AD24
IDSEL
GND_14
AD22
AD20
PAR
AD18
AD16
GND_13
FRAME#
TRDY#
STOP#
3.3V_5
DEVSEL#
GND_12
AD15
AD13
AD11
GND_11
AD9
C/BE#0
3.3V_4
AD6
AD4
AD2
AD0
RSVD_5
RSVD_4
GND_10
M66EN
AC_DO
AC_ID0#
AC_RST#
RSVD_3
GND_9
SYS_A_IN
SYAIGND
AGND_1
MCPIACT#
3.3VAUX
17 INT_PIRQC-
14 MINI_CLK
17 P_REQ2-
C701 10PF
17,20,22 C/BE3-
17,20,22 C/BE2-
17,20,22 P_IRDY-
17,20,26 P_CLKRUN-
17,20,22 P_SERR-
17,20,22 P_PERR-
17,20,22 C/BE1-
P_AD31
P_AD29
P_AD27
P_AD25
P_AD23
P_AD21
P_AD19
P_AD17
P_AD14
P_AD12
P_AD10
P_AD8
P_AD7
P_AD5
P_AD3
P_AD1
P_AD22
R451 100
+3VAUX
C312 0.1UF
C313 2.2UF_0805
INT_PIRQB- 17
PCIRST- 7,9,17,20,22,24,26,27
P_GNT2- 17
R447 0
P_PME- 17,20,22,27
P_AD30
P_AD28
P_AD26
P_AD24
R446 100
P_AD18
P_AD22
P_AD20
P_PAR 17,20,22
P_AD18
P_AD16
P_FRAME- 17,20,22
P_TRDY- 17,20,22
P_STOP- 17,20,22
P_DEVSEL- 17,20,22
P_AD15
P_AD13
P_AD11
P_AD9
C/BE0- 17,20,22
P_AD6
P_AD4
P_AD2
P_AD0
AC_ID0
AC_SDOUT 18,25
AC_RST- 18,25
MINI_CLK2 14
PHONE
TP98
TP99
+3VAUX
C311 0.1UF
TUNE FOR SOME CARD
25 BIT_CLK_PCI
R179 0
C317 10PF
MINI_BITCLK
18,25 AC_SYNC
18 AC_SDIN1
AC_SYNC
R191 22
AC_DI
AC_ID1
PHONE
R190 0_NC
PHONE111
VCC5
FB2 FCM1608K-121
MINI_VCC5A
C713 0.1UF
C707 0.1UF
C699 2200PF
FB1 FCM1608K-121
MINI_AGND

NOTE: THE ID PIN IS REVERSED TO CODEC

PCB ST TO GND

| AC_ID1 | AC_ID0 | CODEC |
|---|---|---|
| 0 | 0 | PRIMARY |
| 0 | 1 | SECONDARY |

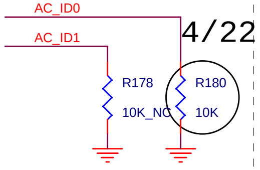
AC_ID0
AC_ID1
R178 10K_NC
R180 10K

4/22

FOR G551 :
PHONE AND MONO_OUT NOT USE

MINI PCI POWER SPEC.
TOYAL : 2W
+5V : 100mA
3.3VAUX : 5/200/375mA
VCC5A : 100mA
+3V

ECS CORPORATION

Title
G551 MINIPCI

| Size | Document Number | Rev |
|---|---|---|
| B | G551-1-4-01 | 2.0 |

Date: Thursday, May 29, 2003 Sheet 23 of 36

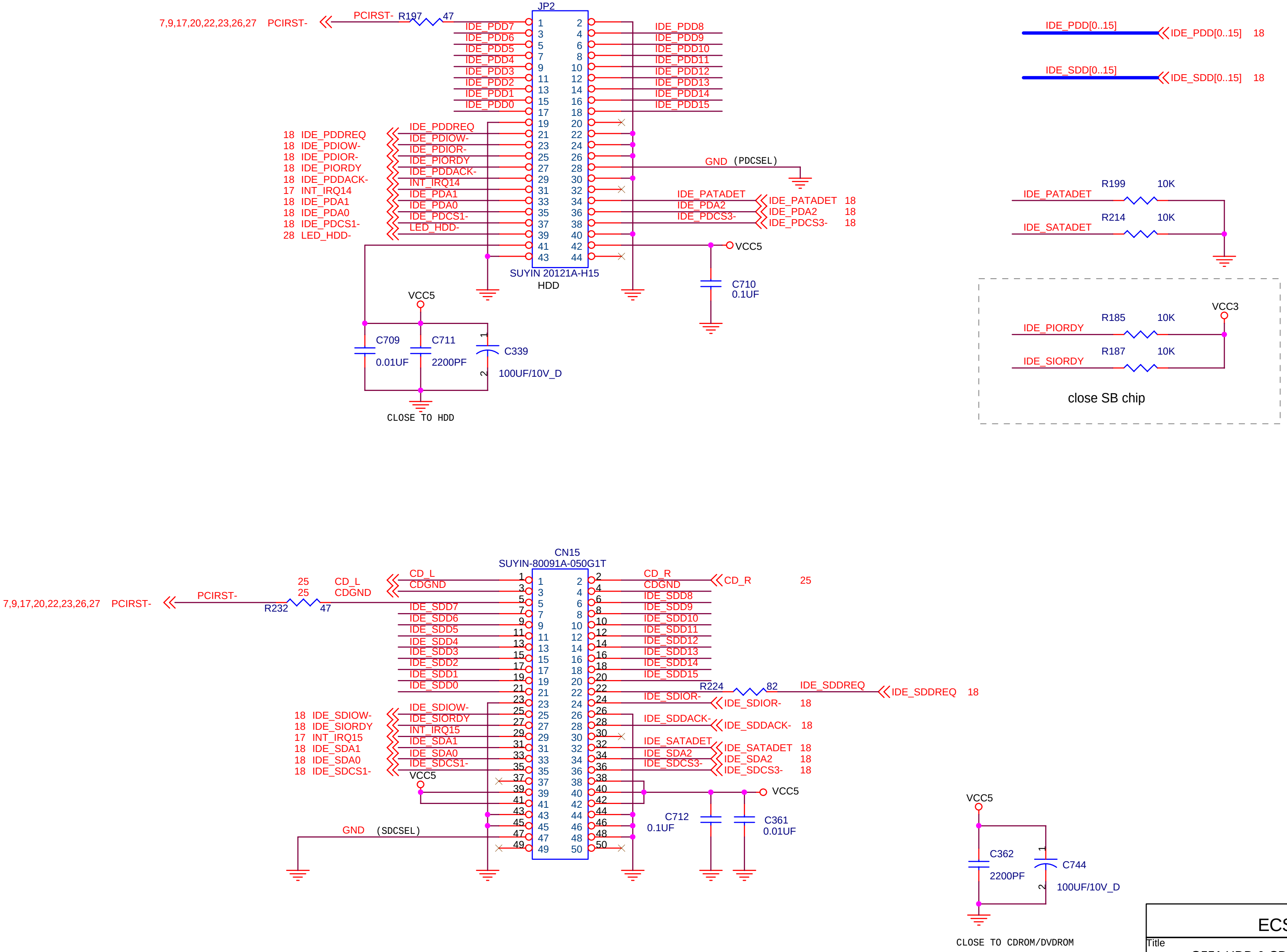
JP2
SUYIN 20121A-H15
HDD
7,9,17,20,22,23,26,27 PCIRST-
PCIRST-
R197 47
IDE_PDD7
IDE_PDD6
IDE_PDD5
IDE_PDD4
IDE_PDD3
IDE_PDD2
IDE_PDD1
IDE_PDD0
IDE_PDD8
IDE_PDD9
IDE_PDD10
IDE_PDD11
IDE_PDD12
IDE_PDD13
IDE_PDD14
IDE_PDD15
18 IDE_PDDREQ
18 IDE_PDIOW-
18 IDE_PDIOR-
18 IDE_PIORDY
18 IDE_PDDACK-
17 INT_IRQ14
18 IDE_PDA1
18 IDE_PDA0
18 IDE_PDCS1-
28 LED_HDD-
GND (PDCSEL)
IDE_PATADET 18
IDE_PDA2 18
IDE_PDCS3- 18
VCC5
C710 0.1UF
VCC5
C709 0.01UF
C711 2200PF
C339 100UF/10V_D
CLOSE TO HDD
IDE_PDD[0..15] IDE_PDD[0..15] 18
IDE_SDD[0..15] IDE_SDD[0..15] 18
IDE_PATADET R199 10K
IDE_SATADET R214 10K
IDE_PIORDY R185 10K
IDE_SIORDY R187 10K
VCC3
close SB chip
CN15
SUYIN-80091A-050G1T
25 CD_L
25 CDGND
CD_R
CDGND
CD_R 25
7,9,17,20,22,23,26,27 PCIRST-
PCIRST-
R232 47
IDE_SDD7
IDE_SDD6
IDE_SDD5
IDE_SDD4
IDE_SDD3
IDE_SDD2
IDE_SDD1
IDE_SDD0
IDE_SDD8
IDE_SDD9
IDE_SDD10
IDE_SDD11
IDE_SDD12
IDE_SDD13
IDE_SDD14
IDE_SDD15
R224 82
IDE_SDDREQ
IDE_SDDREQ 18
IDE_SDIOR- 18
IDE_SDDACK- 18
IDE_SATADET 18
IDE_SDA2 18
IDE_SDCS3- 18
18 IDE_SDIOW-
18 IDE_SIORDY
17 INT_IRQ15
18 IDE_SDA1
18 IDE_SDA0
18 IDE_SDCS1-
VCC5
GND (SDCSEL)
VCC5
C712 0.1UF
C361 0.01UF
VCC5
C362 2200PF
C744 100UF/10V_D
CLOSE TO CDROM/DVDROM

ECS CORPORATION

Title
G551 HDD & CDROM CONN.

| Size | Document Number | Rev |
|---|---|---|
| B | G551-1-4-01 | 1.0 |

Date: Thursday, May 29, 2003 Sheet 24 of 36

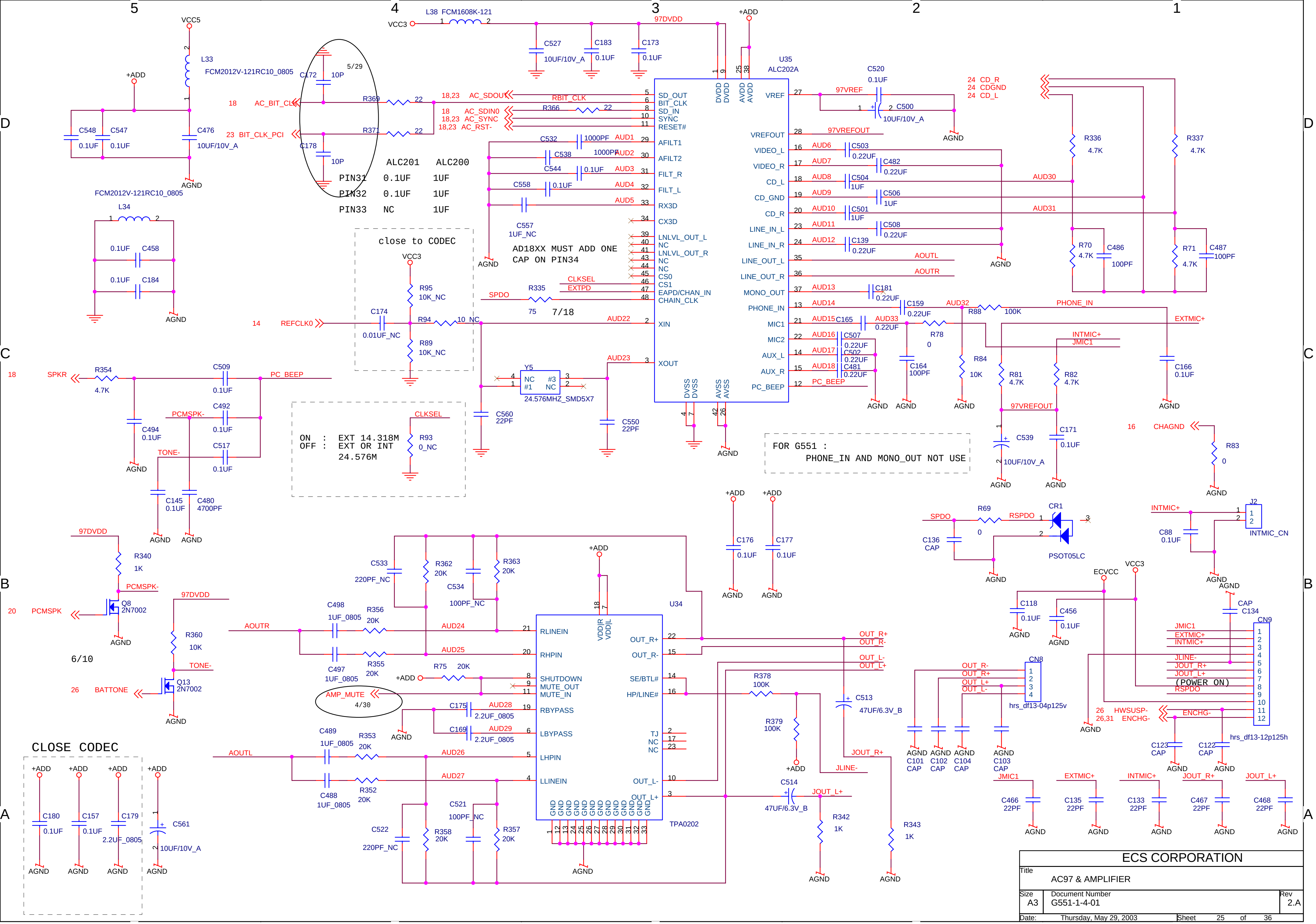

5
4
3
2
1
D
C
B
A
VCC5
L33
FCM2012V-121RC10_0805
+ADD
C548
0.1UF
C547
0.1UF
C476
10UF/10V_A
AGND
FCM2012V-121RC10_0805
L34
0.1UF C458
0.1UF C184
AGND
L38 FCM1608K-121
VCC3
97DVDD
C527 10UF/10V_A
C183 0.1UF
C173 0.1UF
+ADD
U35
ALC202A
C172 10P
5/29
18 AC_BIT_CLK
23 BIT_CLK_PCI
R369 22
R371 22
C178 10P
ALC201 ALC200
PIN31 0.1UF 1UF
PIN32 0.1UF 1UF
PIN33 NC 1UF
18,23 AC_SDOUT
RBIT_CLK
R366 22
18 AC_SDIN0
18,23 AC_SYNC
18,23 AC_RST-
SD_OUT
BIT_CLK
SD_IN
SYNC
RESET#
AFILT1
AFILT2
FILT_R
FILT_L
RX3D
CX3D
LNLVL_OUT_L
NC
LNLVL_OUT_R
NC
NC
CS0
CS1
EAPD/CHAN_IN
CHAIN_CLK
XIN
XOUT
DVDD DVDD AVDD AVDD
DVSS DVSS AVSS AVSS
C532 1000PF AUD1
C538 1000PF AUD2
C544 0.1UF AUD3
C558 0.1UF AUD4
AUD5
C557 1UF_NC
AD18XX MUST ADD ONE CAP ON PIN34
AGND
CLKSEL
EXTPD
SPDO
R335 75
7/18
close to CODEC
VCC3
R95 10K_NC
C174 0.01UF_NC
R94 10 NC
R89 10K_NC
14 REFCLK0
AUD22
AUD23
Y5 24.576MHZ_SMD5X7
C560 22PF
C550 22PF
ON : EXT 14.318M
OFF : EXT OR INT 24.576M
CLKSEL
R93 0_NC
VREF
VREFOUT
VIDEO_L
VIDEO_R
CD_L
CD_GND
CD_R
LINE_IN_L
LINE_IN_R
LINE_OUT_L
LINE_OUT_R
MONO_OUT
PHONE_IN
MIC1
MIC2
AUX_L
AUX_R
PC_BEEP
C520 0.1UF
97VREF
C500 10UF/10V_A
97VREFOUT
AUD6 C503 0.22UF
AUD7 C482 0.22UF
AUD8 C504 1UF
AUD9 C506 1UF
AUD10 C501 1UF
AUD11 C508 0.22UF
AUD12 C139 0.22UF
AOUTL
AOUTR
AUD13 C181 0.22UF
AUD14 C159 0.22UF
AUD15 C165 AUD33 0.22UF
AUD16 C507 0.22UF
AUD17 C502 0.22UF
AUD18 C481 0.22UF
PC_BEEP
C164 100PF
R78 0
R88 100K
AUD32
PHONE_IN
EXTMIC+
INTMIC+
JMIC1
R84 10K
R81 4.7K
R82 4.7K
C166 0.1UF
97VREFOUT
C539 10UF/10V_A
C171 0.1UF
24 CD_R
24 CDGND
24 CD_L
R336 4.7K
R337 4.7K
AUD30
AUD31
R70 4.7K
C486 100PF
R71 4.7K
C487 100PF
FOR G551 :
PHONE_IN AND MONO_OUT NOT USE
16 CHAGND
R83 0
18 SPKR
R354 4.7K
C509 0.1UF
PC_BEEP
C494 0.1UF
PCMSPK-
C492 0.1UF
TONE-
C517 0.1UF
C145 0.1UF
C480 4700PF
97DVDD
R340 1K
PCMSPK-
20 PCMSPK
Q8 2N7002
97DVDD
R360 10K
6/10
TONE-
26 BATTONE
Q13 2N7002
CLOSE CODEC
C180 0.1UF
C157 0.1UF
C179 2.2UF_0805
C561 10UF/10V_A
C533 220PF_NC
R362 20K
C534 100PF_NC
R363 20K
+ADD
U34
AOUTR
C498 1UF_0805
R356 20K
AUD24
AUD25
C497 1UF_0805
R355 20K
R75 20K
AMP_MUTE 4/30
C175 2.2UF_0805 AUD28
C169 2.2UF_0805 AUD29
AOUTL
C489 1UF_0805
R353 20K
AUD26
AUD27
C488 1UF_0805
R352 20K
C521 100PF_NC
C522 220PF_NC
R358 20K
R357 20K
RLINEIN
RHPIN
SHUTDOWN
MUTE_OUT
MUTE_IN
RBYPASS
LBYPASS
LHPIN
LLINEIN
VDDIR VDDIL
OUT_R+
OUT_R-
SE/BTL#
HP/LINE#
TJ
NC
NC
OUT_L-
OUT_L+
GND
TPA0202
C176 0.1UF
C177 0.1UF
OUT_R+
OUT_R-
OUT_L-
OUT_L+
R378 100K
R379 100K
C513 47UF/6.3V_B
JOUT_R+
JLINE-
C514 47UF/6.3V_B
JOUT_L+
R342 1K
R343 1K
SPDO
R69 0
RSPDO
CR1
PSOT05LC
C136 CAP
INTMIC+
C88 0.1UF
J2
INTMIC_CN
CN8
hrs_df13-04p125v
C101 CAP
C102 CAP
C104 CAP
C103 CAP
ECVCC
VCC3
C118 0.1UF
C456 0.1UF
CAP C134
CN9
JMIC1
EXTMIC+
INTMIC+
JLINE-
JOUT_R+
JOUT_L+
(POWER ON)
RSPDO
26 HWSUSP-
26,31 ENCHG-
ENCHG-
C123 CAP
C122 CAP
hrs_df13-12p125h
JMIC1 C466 22PF
EXTMIC+ C135 22PF
INTMIC+ C133 22PF
JOUT_R+ C467 22PF
JOUT_L+ C468 22PF

ECS CORPORATION

Title
AC97 & AMPLIFIER

| Size | Document Number | Rev |
|---|---|---|
| A3 | G551-1-4-01 | 2.A |

Date: Thursday, May 29, 2003 Sheet 25 of 36

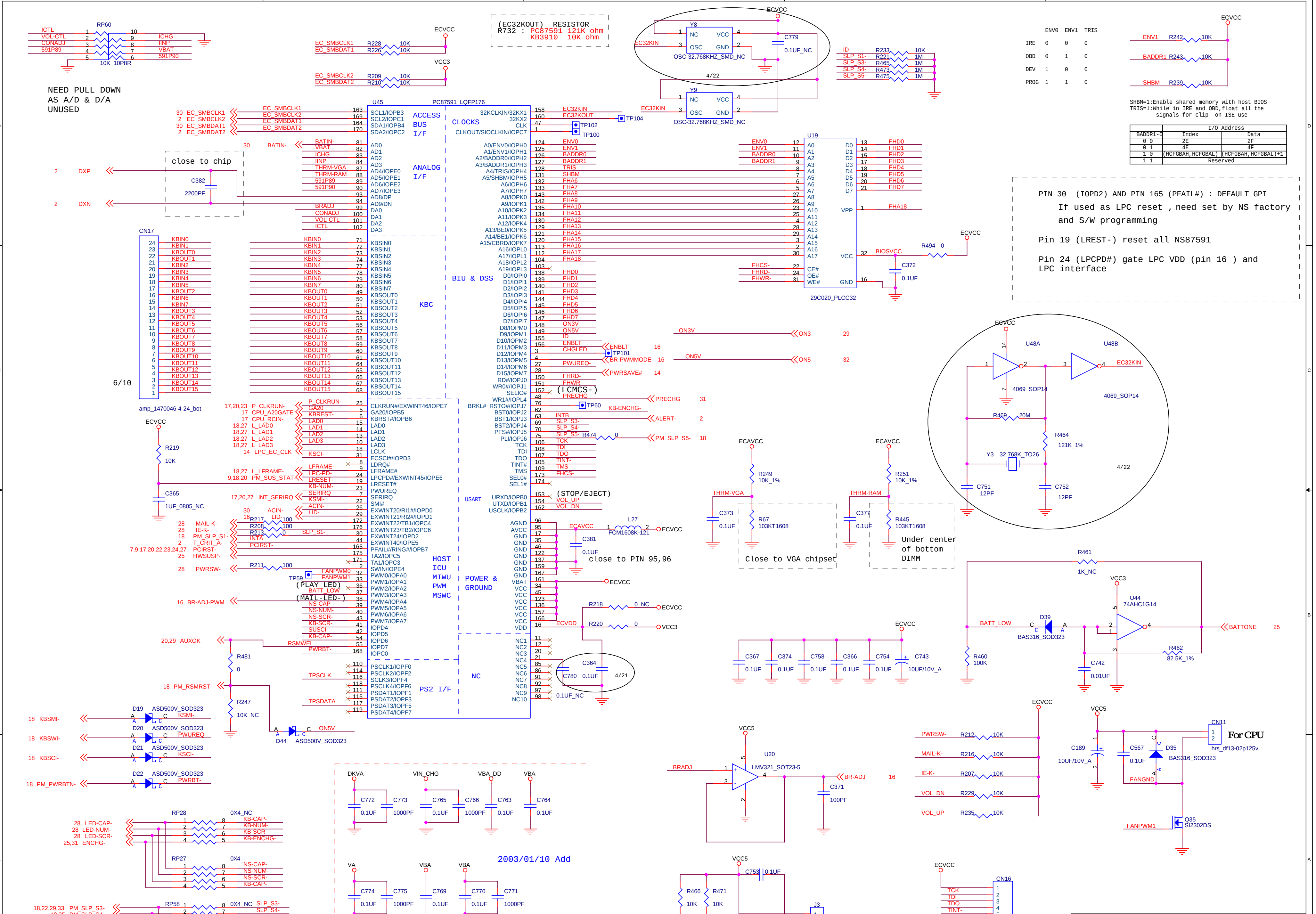
U45
PC87591_LQFP176
ACCESS BUS I/F
ANALOG I/F
CLOCKS
BIU & DSS
KBC
HOST ICU MIWU PWM MSWC
POWER & GROUND
USART
PS2 I/F
NC
U19
29C020_PLCC32
Y8
Y9
OSC-32.768KHZ_SMD_NC
RP60
10K_10P8R
CN17
amp_1470046-4-24_bot
U48A
U48B
4069_SOP14
Y3 32.768K_TO26
U44
74AHC1G14
U20
LMV321_SOT23-5
J3
AMP_1470047-4-4_TOP
CN16
hrs_df13-7p125v
CN11
hrs_df13-02p125v
For CPU
Q35
SI2302DS
D35
BAS316_SOD323
D39
BAS316_SOD323
L27
FCM1608K-121
ECVCC
VCC3
VCC5
ECAVCC
RP28
RP27
RP58
RP59
D19
D20
D21
D22
D44
ASD500V_SOD323
DKVA
VIN_CHG
VBA_DD
VBA
VA
4/22
4/21
6/10
(STOP/EJECT)
(PLAY LED)
(MAIL-LED-)
(LCMCS-)
close to PIN 95,96
Close to VGA chipset
Under center of bottom DIMM
close to chip
2003/01/10 Add

(EC32KOUT) RESISTOR
R732 : PC87591 121K ohm
KB3910 10K ohm

NEED PULL DOWN
AS A/D & D/A
UNUSED

| | ENV0 | ENV1 | TRIS |
|---|---|---|---|
| IRE | 0 | 0 | 0 |
| OBD | 0 | 1 | 0 |
| DEV | 1 | 0 | 0 |
| PROG | 1 | 1 | 0 |

SHBM=1:Enable shared memory with host BIOS
TRIS=1:While in IRE and OBD,float all the
signals for clip -on ISE use

| | I/O Address | |
|---|---|---|
| BADDR1-0 | Index | Data |
| 0 0 | 2E | 2F |
| 0 1 | 4E | 4F |
| 1 0 | (HCFGBAH,HCFGBAL) | (HCFGBAH,HCFGBAL)+1 |
| 1 1 | Reserved | |

PIN 30 (IOPD2) AND PIN 165 (PFAIL#) : DEFAULT GPI
If used as LPC reset , need set by NS factory
and S/W programming

Pin 19 (LREST-) reset all NS87591

Pin 24 (LPCPD#) gate LPC VDD (pin 16 ) and
LPC interface

ECS CORPORATION

Title
G551 KBC/EC/uP PC87591

Size C
Document Number G551-1-4-01
Rev 2.0

Date: Thursday, May 29, 2003
Sheet 26 of 36

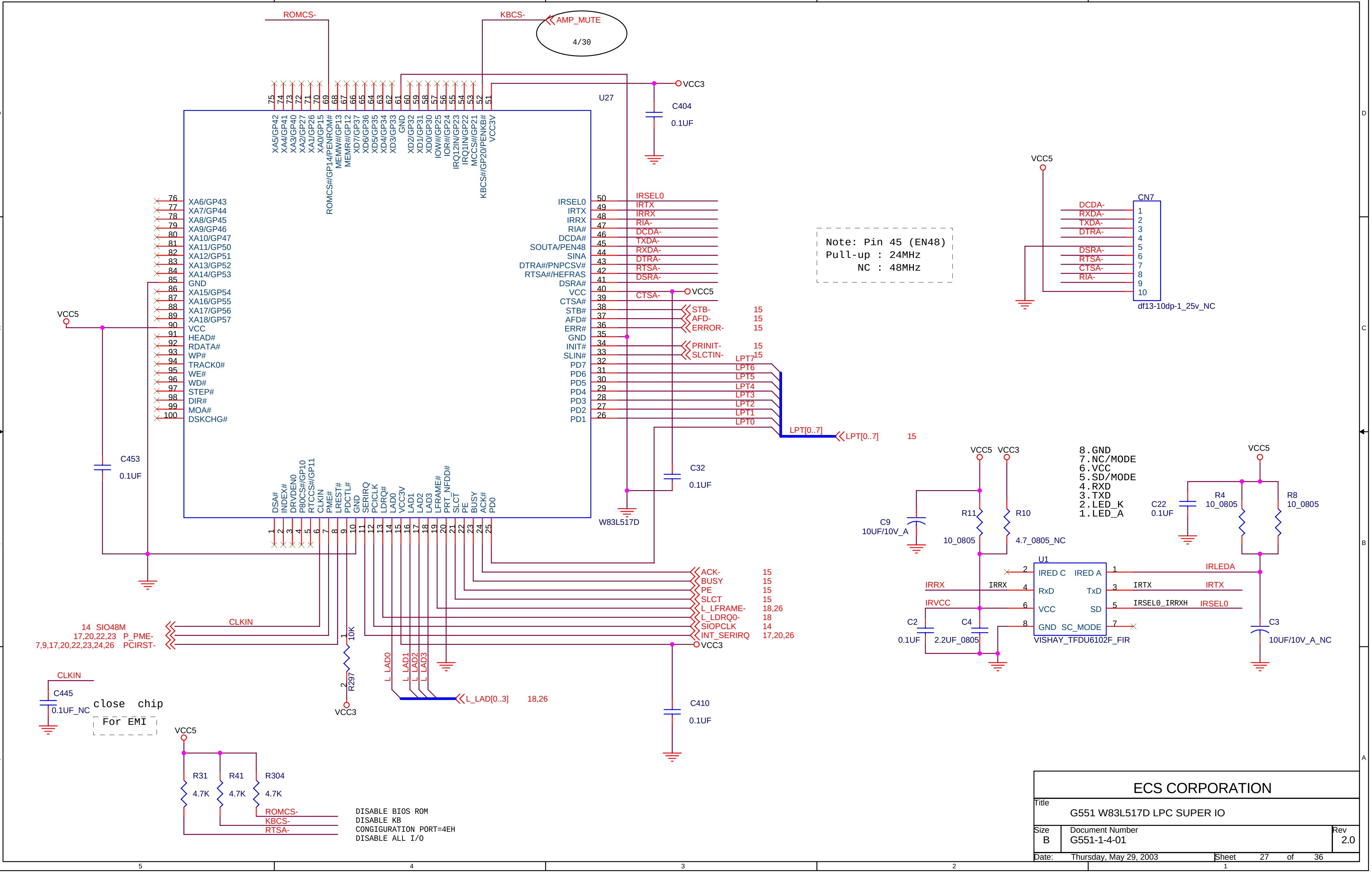
ROMCS-
KBCS-
AMP_MUTE
4/30
VCC3
C404
0.1UF
U27
W83L517D
XA5/GP42
XA4/GP41
XA3/GP40
XA2/GP27
XA1/GP26
XA0/GP15
ROMCS#/GP14/PENROM#
MEMW#/GP13
MEMR#/GP12
XD7/GP37
XD6/GP36
XD5/GP35
XD4/GP34
XD3/GP33
GND
XD2/GP32
XD1/GP31
XD0/GP30
IOW#/GP25
IOR#/GP24
IRQ12IN/GP23
IRQ1IN/GP22
MCCS#/GP21
KBCS#/GP20/PENKB#
VCC3V
XA6/GP43
XA7/GP44
XA8/GP45
XA9/GP46
XA10/GP47
XA11/GP50
XA12/GP51
XA13/GP52
XA14/GP53
GND
XA15/GP54
XA16/GP55
XA17/GP56
XA18/GP57
VCC
HEAD#
RDATA#
WP#
TRACK0#
WE#
WD#
STEP#
DIR#
MOA#
DSKCHG#
IRSEL0
IRTX
IRRX
RIA#
DCDA#
SOUTA/PEN48
SINA
DTRA#/PNPCSV#
RTSA#/HEFRAS
DSRA#
VCC
CTSA#
STB#
AFD#
ERR#
GND
INIT#
SLIN#
PD7
PD6
PD5
PD4
PD3
PD2
PD1
DSA#
INDEX#
DRVDEN0
P80CS#/GP10
RTCCS#/GP11
CLKIN
PME#
LREST#
PDCTL#
GND
SERIRQ
PCICLK
LDRQ#
LAD0
VCC3V
LAD1
LAD2
LAD3
LFRAME#
PRT_NFDD#
SLCT
PE
BUSY
ACK#
PD0
IRSEL0
IRTX
IRRX
RIA-
DCDA-
TXDA-
RXDA-
DTRA-
RTSA-
DSRA-
CTSA-
VCC5
STB- 15
AFD- 15
ERROR- 15
PRINIT- 15
SLCTIN- 15
LPT7
LPT6
LPT5
LPT4
LPT3
LPT2
LPT1
LPT0
LPT[0..7]
LPT[0..7] 15
C32
0.1UF
C453
0.1UF
VCC5
ACK- 15
BUSY 15
PE 15
SLCT 15
L_LFRAME- 18,26
L_LDRQ0- 18
SIOPCLK 14
INT_SERIRQ 17,20,26
VCC3
CLKIN
14 SIO48M
17,20,22,23 P_PME-
7,9,17,20,22,23,24,26 PCIRST-
10K
R297
VCC3
L_LAD0
L_LAD1
L_LAD2
L_LAD3
L_LAD[0..3] 18,26
C410
0.1UF
CLKIN
C445
0.1UF_NC
close chip
For EMI
VCC5
R31 4.7K
R41 4.7K
R304 4.7K
ROMCS-
KBCS-
RTSA-
VCC5
CN7
DCDA-
RXDA-
TXDA-
DTRA-
DSRA-
RTSA-
CTSA-
RIA-
df13-10dp-1_25v_NC
VCC5
VCC3
8.GND
7.NC/MODE
6.VCC
5.SD/MODE
4.RXD
3.TXD
2.LED_K
1.LED_A
VCC5
C9
10UF/10V_A
R11
10_0805
R10
4.7_0805_NC
C22
0.1UF
R4
10_0805
R8
10_0805
U1
IRED C
IRED A
RxD
TxD
VCC
SD
GND
SC_MODE
VISHAY_TFDU6102F_FIR
IRLEDA
IRRX
IRRX
IRTX
IRTX
IRVCC
IRSEL0_IRRXH
IRSEL0
C2
0.1UF
C4
2.2UF_0805
C3
10UF/10V_A_NC

Note: Pin 45 (EN48)
Pull-up : 24MHz
NC : 48MHz

DISABLE BIOS ROM
DISABLE KB
CONGIGURATION PORT=4EH
DISABLE ALL I/O

ECS CORPORATION

Title
G551 W83L517D LPC SUPER IO

| Size | Document Number | Rev |
|---|---|---|
| B | G551-1-4-01 | 2.0 |

Date: Thursday, May 29, 2003 Sheet 27 of 36

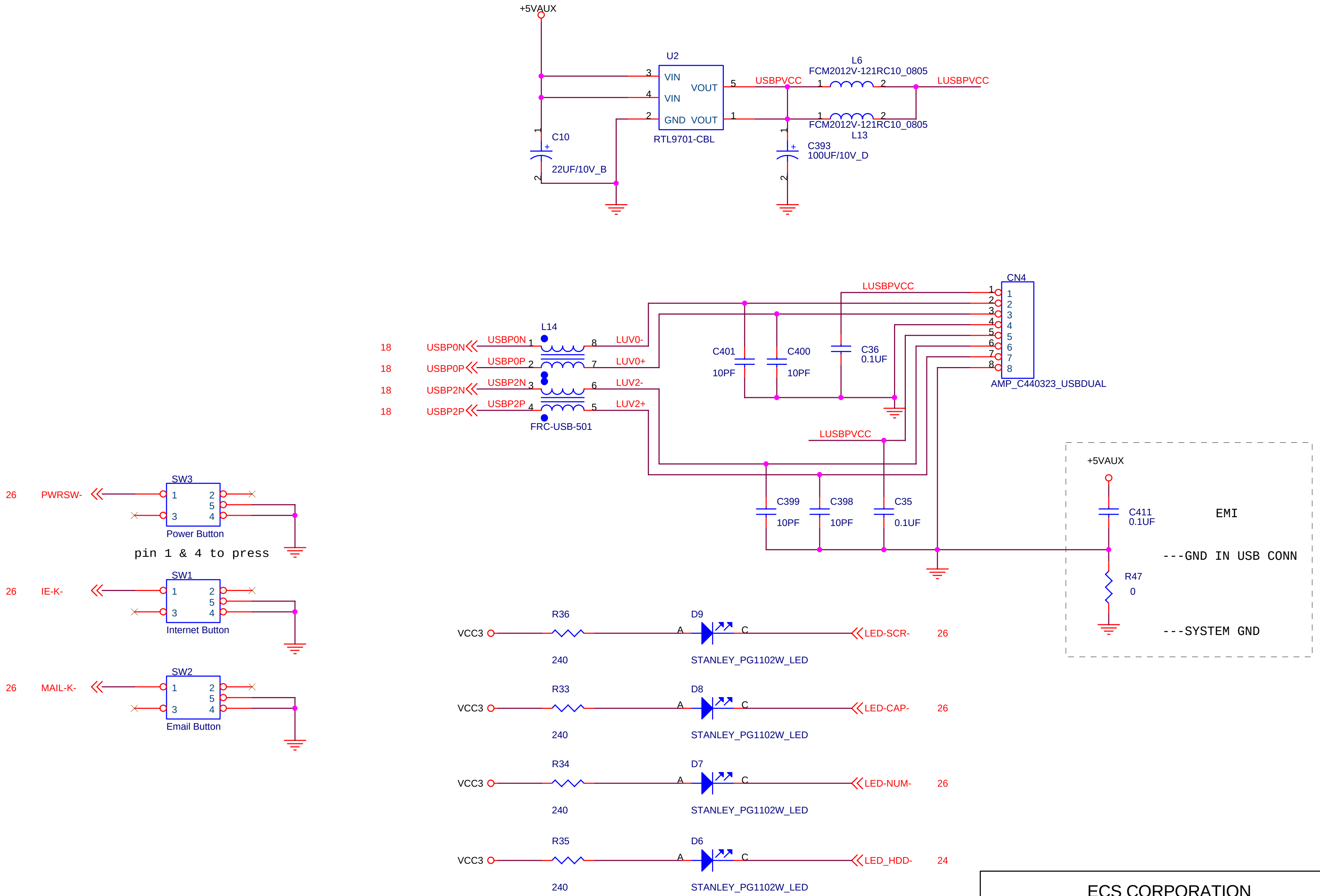
+5VAUX
U2
VIN
VIN
GND
VOUT
VOUT
RTL9701-CBL
C10
22UF/10V_B
USBPVCC
L6
FCM2012V-121RC10_0805
LUSBPVCC
FCM2012V-121RC10_0805
L13
C393
100UF/10V_D
CN4
AMP_C440323_USBDUAL
LUSBPVCC
L14
FRC-USB-501
18 USBP0N
18 USBP0P
18 USBP2N
18 USBP2P
USBP0N
USBP0P
USBP2N
USBP2P
LUV0-
LUV0+
LUV2-
LUV2+
C401 10PF
C400 10PF
C36 0.1UF
LUSBPVCC
C399 10PF
C398 10PF
C35 0.1UF
+5VAUX
C411 0.1UF
EMI
---GND IN USB CONN
R47 0
---SYSTEM GND
SW3
26 PWRSW-
Power Button
pin 1 & 4 to press
SW1
26 IE-K-
Internet Button
SW2
26 MAIL-K-
Email Button
VCC3 R36 240 D9 STANLEY_PG1102W_LED LED-SCR- 26
VCC3 R33 240 D8 STANLEY_PG1102W_LED LED-CAP- 26
VCC3 R34 240 D7 STANLEY_PG1102W_LED LED-NUM- 26
VCC3 R35 240 D6 STANLEY_PG1102W_LED LED_HDD- 24

## ECS CORPORATION

Title
G551 USB PORT & LEDs

| Size | Document Number | Rev |
|---|---|---|
| B | G551-1-4-01 | 1.0 |

Date: Thursday, May 29, 2003 Sheet 28 of 36

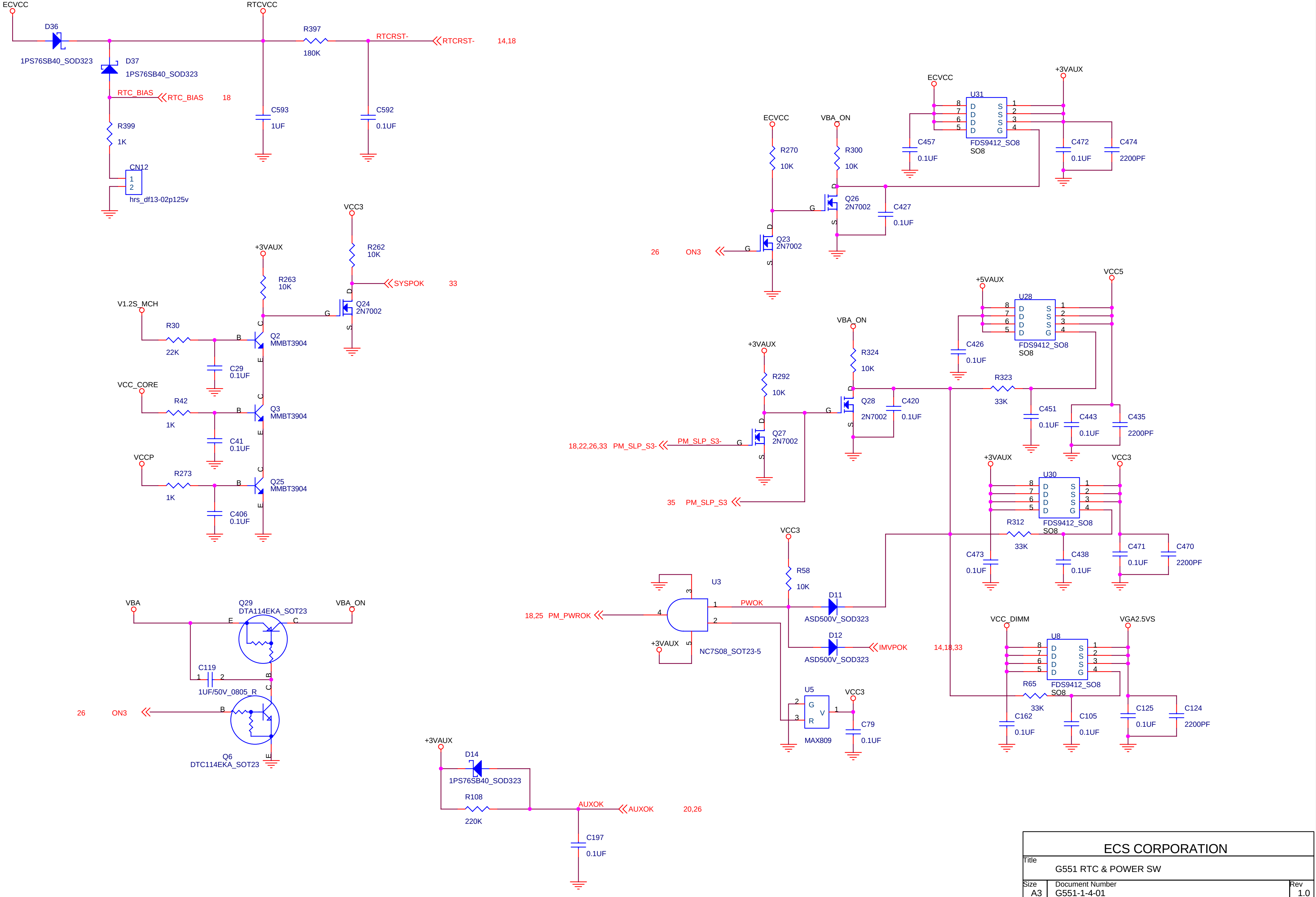
ECVCC
D36
1PS76SB40_SOD323
D37
1PS76SB40_SOD323
RTCVCC
R397
180K
RTCRST-
RTCRST-
14,18
RTC_BIAS
RTC_BIAS
18
C593
1UF
C592
0.1UF
R399
1K
CN12
1
2
hrs_df13-02p125v
VCC3
R262
10K
SYSPOK
33
+3VAUX
R263
10K
Q24
2N7002
V1.2S_MCH
R30
22K
Q2
MMBT3904
C29
0.1UF
VCC_CORE
R42
1K
Q3
MMBT3904
C41
0.1UF
VCCP
R273
1K
Q25
MMBT3904
C406
0.1UF
VBA
Q29
DTA114EKA_SOT23
VBA_ON
C119
1UF/50V_0805_R
26
ON3
Q6
DTC114EKA_SOT23
+3VAUX
D14
1PS76SB40_SOD323
R108
220K
AUXOK
AUXOK
20,26
C197
0.1UF
ECVCC
U31
FDS9412_SO8
SO8
+3VAUX
C457
0.1UF
C472
0.1UF
C474
2200PF
ECVCC
R270
10K
VBA_ON
R300
10K
Q26
2N7002
C427
0.1UF
Q23
2N7002
26
ON3
+5VAUX
VCC5
U28
FDS9412_SO8
SO8
C426
0.1UF
VBA_ON
R324
10K
+3VAUX
R292
10K
Q28
2N7002
C420
0.1UF
R323
33K
C451
0.1UF
C443
0.1UF
C435
2200PF
Q27
2N7002
18,22,26,33
PM_SLP_S3-
PM_SLP_S3-
35
PM_SLP_S3
+3VAUX
VCC3
U30
FDS9412_SO8
SO8
R312
33K
C473
0.1UF
C438
0.1UF
C471
0.1UF
C470
2200PF
VCC3
R58
10K
U3
NC7S08_SOT23-5
18,25
PM_PWROK
PWOK
D11
ASD500V_SOD323
D12
ASD500V_SOD323
IMVPOK
14,18,33
+3VAUX
U5
MAX809
VCC3
C79
0.1UF
VCC_DIMM
VGA2.5VS
U8
FDS9412_SO8
SO8
R65
33K
C162
0.1UF
C105
0.1UF
C125
0.1UF
C124
2200PF

ECS CORPORATION

Title
G551 RTC & POWER SW

| Size | Document Number | Rev |
|---|---|---|
| A3 | G551-1-4-01 | 1.0 |

Date: Thursday, May 29, 2003 Sheet 29 of 36

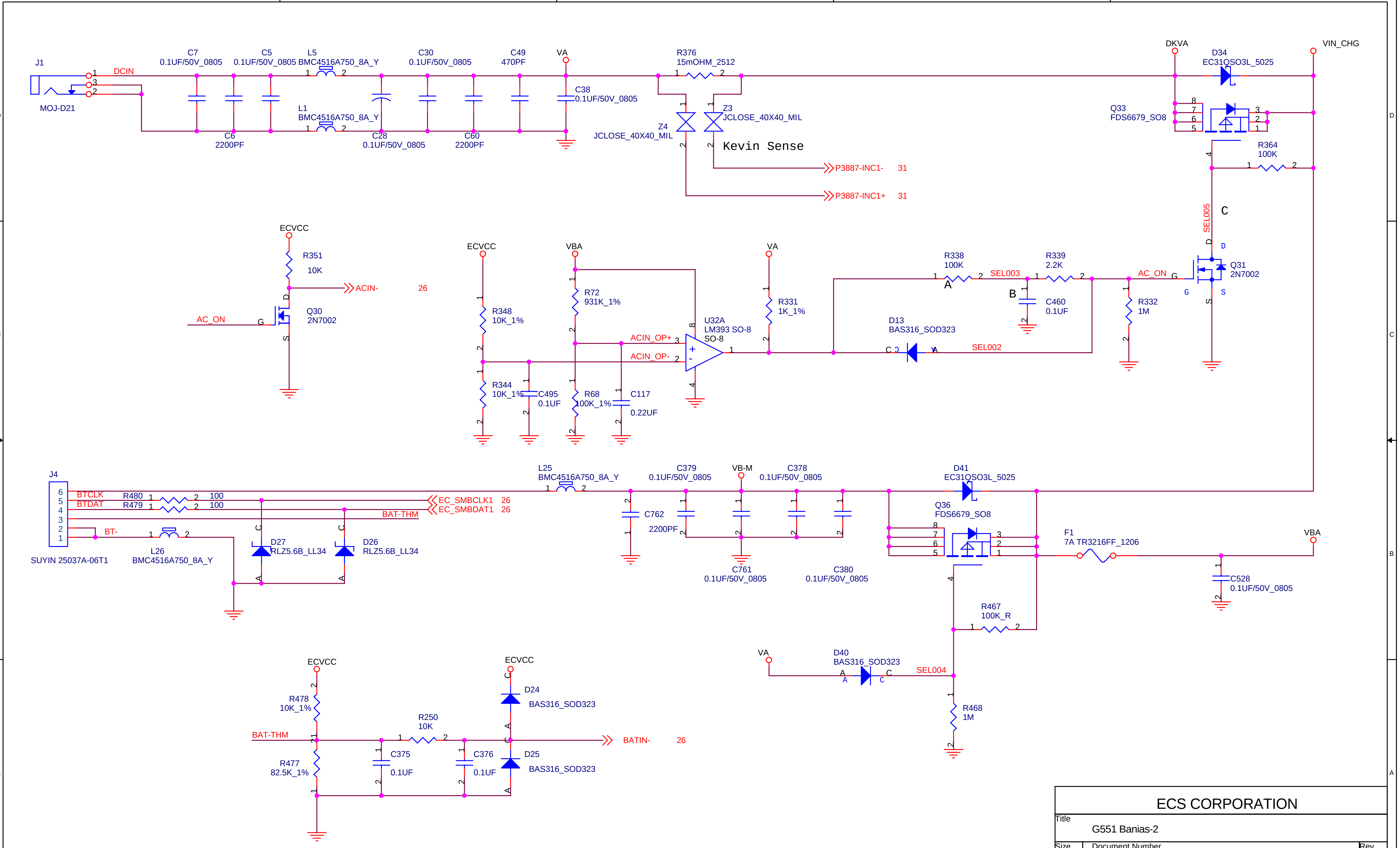
J1
MOJ-D21
DCIN
C7
0.1UF/50V_0805
C5
0.1UF/50V_0805
L5
BMC4516A750_8A_Y
C30
0.1UF/50V_0805
C49
470PF
VA
C38
0.1UF/50V_0805
C6
2200PF
L1
BMC4516A750_8A_Y
C28
0.1UF/50V_0805
C60
2200PF
R376
15mOHM_2512
Z4
JCLOSE_40X40_MIL
Z3
JCLOSE_40X40_MIL
Kevin Sense
P3887-INC1- 31
P3887-INC1+ 31
DKVA
D34
EC31QS03L_5025
VIN_CHG
Q33
FDS6679_SO8
R364
100K
SEL005
C
ECVCC
R351
10K
ACIN- 26
AC_ON
Q30
2N7002
ECVCC
VBA
VA
R348
10K_1%
R72
931K_1%
ACIN_OP+
ACIN_OP-
U32A
LM393 SO-8
SO-8
R331
1K_1%
R338
100K
A
SEL003
R339
2.2K
B
C460
0.1UF
AC_ON
Q31
2N7002
D13
BAS316_SOD323
SEL002
R332
1M
R344
10K_1%
C495
0.1UF
R68
100K_1%
C117
0.22UF
J4
SUYIN 25037A-06T1
BTCLK
BTDAT
R480 100
R479 100
EC_SMBCLK1 26
EC_SMBDAT1 26
BAT-THM
BT-
L26
BMC4516A750_8A_Y
D27
RLZ5.6B_LL34
D26
RLZ5.6B_LL34
L25
BMC4516A750_8A_Y
C379
0.1UF/50V_0805
VB-M
C378
0.1UF/50V_0805
C762
2200PF
C761
0.1UF/50V_0805
C380
0.1UF/50V_0805
D41
EC31QS03L_5025
Q36
FDS6679_SO8
F1
7A TR3216FF_1206
VBA
C528
0.1UF/50V_0805
R467
100K_R
VA
D40
BAS316_SOD323
SEL004
R468
1M
ECVCC
R478
10K_1%
BAT-THM
R477
82.5K_1%
R250
10K
C375
0.1UF
C376
0.1UF
ECVCC
D24
BAS316_SOD323
D25
BAS316_SOD323
BATIN- 26

ECS CORPORATION

Title
G551 Banias-2

| Size | Document Number | Rev |
|---|---|---|
| B | G551-1-4-01 | 1.0 |

Date: Thursday, May 29, 2003 Sheet 30 of 36

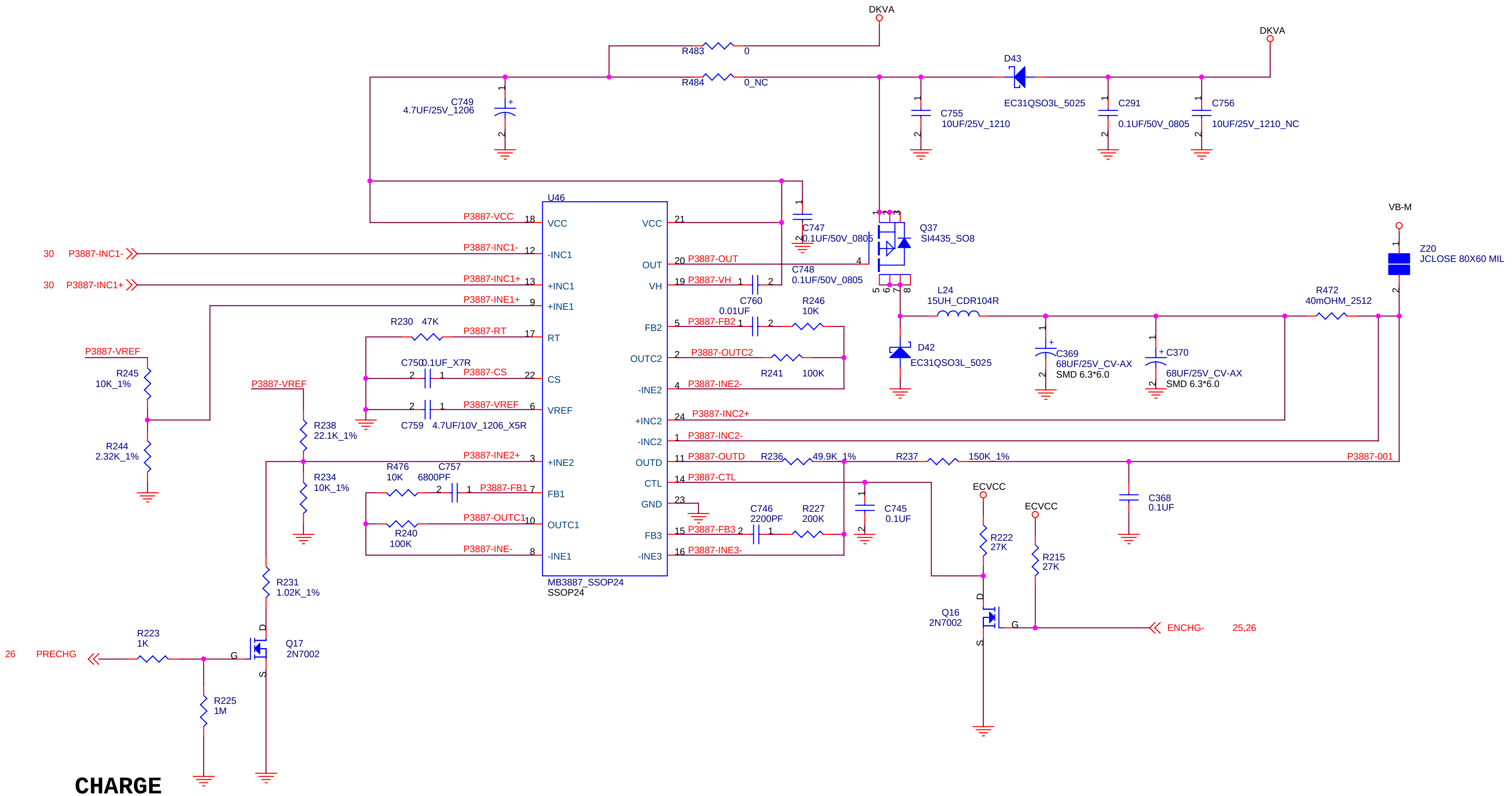
DKVA
R483
0
DKVA
R484
0_NC
D43
EC31QSO3L_5025
C749
4.7UF/25V_1206
C755
10UF/25V_1210
C291
0.1UF/50V_0805
C756
10UF/25V_1210_NC
U46
VB-M
C747
0.1UF/50V_0805
Q37
SI4435_SO8
Z20
JCLOSE 80X60 MIL
P3887-VCC
VCC
VCC
30
P3887-INC1-
-INC1
OUT
P3887-OUT
30
P3887-INC1+
+INC1
VH
P3887-VH
C748
0.1UF/50V_0805
P3887-INE1+
+INE1
C760
0.01UF
R246
10K
L24
15UH_CDR104R
R472
40mOHM_2512
R230
47K
P3887-RT
RT
FB2
P3887-FB2
P3887-VREF
D42
EC31QSO3L_5025
C369
68UF/25V_CV-AX
SMD 6.3*6.0
C370
68UF/25V_CV-AX
SMD 6.3*6.0
R245
10K_1%
C750
0.1UF_X7R
P3887-CS
CS
OUTC2
P3887-OUTC2
R241
100K
P3887-VREF
-INE2
P3887-INE2-
R238
22.1K_1%
P3887-VREF
VREF
C759
4.7UF/10V_1206_X5R
+INC2
P3887-INC2+
R244
2.32K_1%
-INC2
P3887-INC2-
P3887-INE2+
+INE2
OUTD
P3887-OUTD
R236
49.9K_1%
R237
150K_1%
P3887-001
R476
10K
C757
6800PF
R234
10K_1%
P3887-FB1
FB1
CTL
P3887-CTL
ECVCC
C368
0.1UF
GND
ECVCC
P3887-OUTC1
OUTC1
C746
2200PF
R227
200K
C745
0.1UF
R222
27K
R240
100K
FB3
P3887-FB3
R215
27K
P3887-INE-
-INE1
-INE3
P3887-INE3-
MB3887_SSOP24
SSOP24
R231
1.02K_1%
Q16
2N7002
ENCHG-
25,26
R223
1K
Q17
2N7002
26
PRECHG
R225
1M

**CHARGE**

ECS CORPORATION

Title
G551 CHARGER_MB3887

| Size | Document Number | Rev |
|---|---|---|
| A3 | G551-1-4-01 | 1.0 |

Date: Thursday, May 29, 2003
Sheet 31 of 36

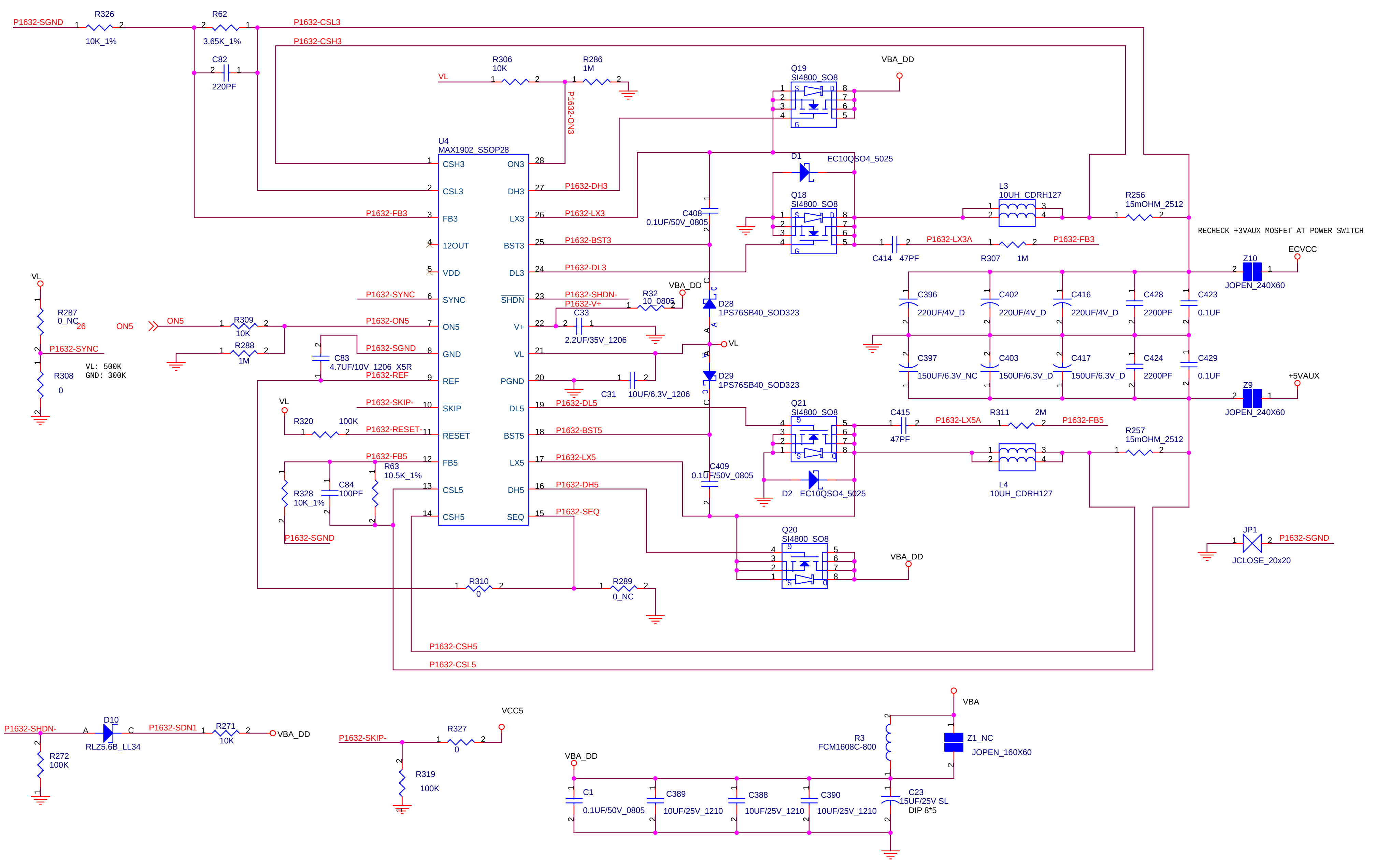
P1632-SGND
R326
10K_1%
R62
3.65K_1%
C82
220PF
P1632-CSL3
P1632-CSH3
VL
R306
10K
R286
1M
P1632-ON3
Q19
SI4800_SO8
VBA_DD
U4
MAX1902_SSOP28
CSH3
CSL3
FB3
12OUT
VDD
SYNC
ON5
GND
REF
SKIP
RESET
FB5
CSL5
CSH5
ON3
DH3
LX3
BST3
DL3
SHDN
V+
VL
PGND
DL5
BST5
LX5
DH5
SEQ
P1632-FB3
P1632-DH3
P1632-LX3
P1632-BST3
P1632-DL3
P1632-SHDN-
P1632-V+
P1632-SYNC
P1632-ON5
P1632-SGND
P1632-REF
P1632-SKIP-
P1632-RESET-
P1632-FB5
D1
EC10QSO4_5025
Q18
SI4800_SO8
C408
0.1UF/50V_0805
L3
10UH_CDRH127
R256
15mOHM_2512
C414
47PF
P1632-LX3A
R307
1M
P1632-FB3
RECHECK +3VAUX MOSFET AT POWER SWITCH
ECVCC
Z10
JOPEN_240X60
C396
220UF/4V_D
C402
220UF/4V_D
C416
220UF/4V_D
C428
2200PF
C423
0.1UF
C397
150UF/6.3V_NC
C403
150UF/6.3V_D
C417
150UF/6.3V_D
C424
2200PF
C429
0.1UF
+5VAUX
Z9
JOPEN_240X60
VL
R287
0_NC
26
ON5
R309
10K
R288
1M
C83
4.7UF/10V_1206_X5R
R308
0
VL: 500K
GND: 300K
R32
10_0805
C33
2.2UF/35V_1206
D28
1PS76SB40_SOD323
D29
1PS76SB40_SOD323
C31
10UF/6.3V_1206
VL
R320
100K
R328
10K_1%
C84
100PF
R63
10.5K_1%
P1632-DL5
P1632-BST5
P1632-LX5
P1632-DH5
P1632-SEQ
Q21
SI4800_SO8
C415
47PF
P1632-LX5A
R311
2M
P1632-FB5
R257
15mOHM_2512
L4
10UH_CDRH127
C409
0.1UF/50V_0805
D2
EC10QSO4_5025
Q20
SI4800_SO8
VBA_DD
JP1
P1632-SGND
JCLOSE_20x20
R310
0
R289
0_NC
P1632-CSH5
P1632-CSL5
P1632-SHDN-
D10
RLZ5.6B_LL34
P1632-SDN1
R271
10K
VBA_DD
R272
100K
P1632-SKIP-
R327
0
VCC5
R319
100K
VBA_DD
C1
0.1UF/50V_0805
C389
10UF/25V_1210
C388
10UF/25V_1210
C390
10UF/25V_1210
R3
FCM1608C-800
C23
15UF/25V SL
DIP 8*5
VBA
Z1_NC
JOPEN_160X60

ECS CORPORATION

Title
+5VAUX/+3VAUX/12VA_MAX1902

| Size | Document Number | Rev |
|---|---|---|
| A3 | G551-1-4-01 | 1.0 |

Date: Thursday, May 29, 2003 Sheet 32 of 36

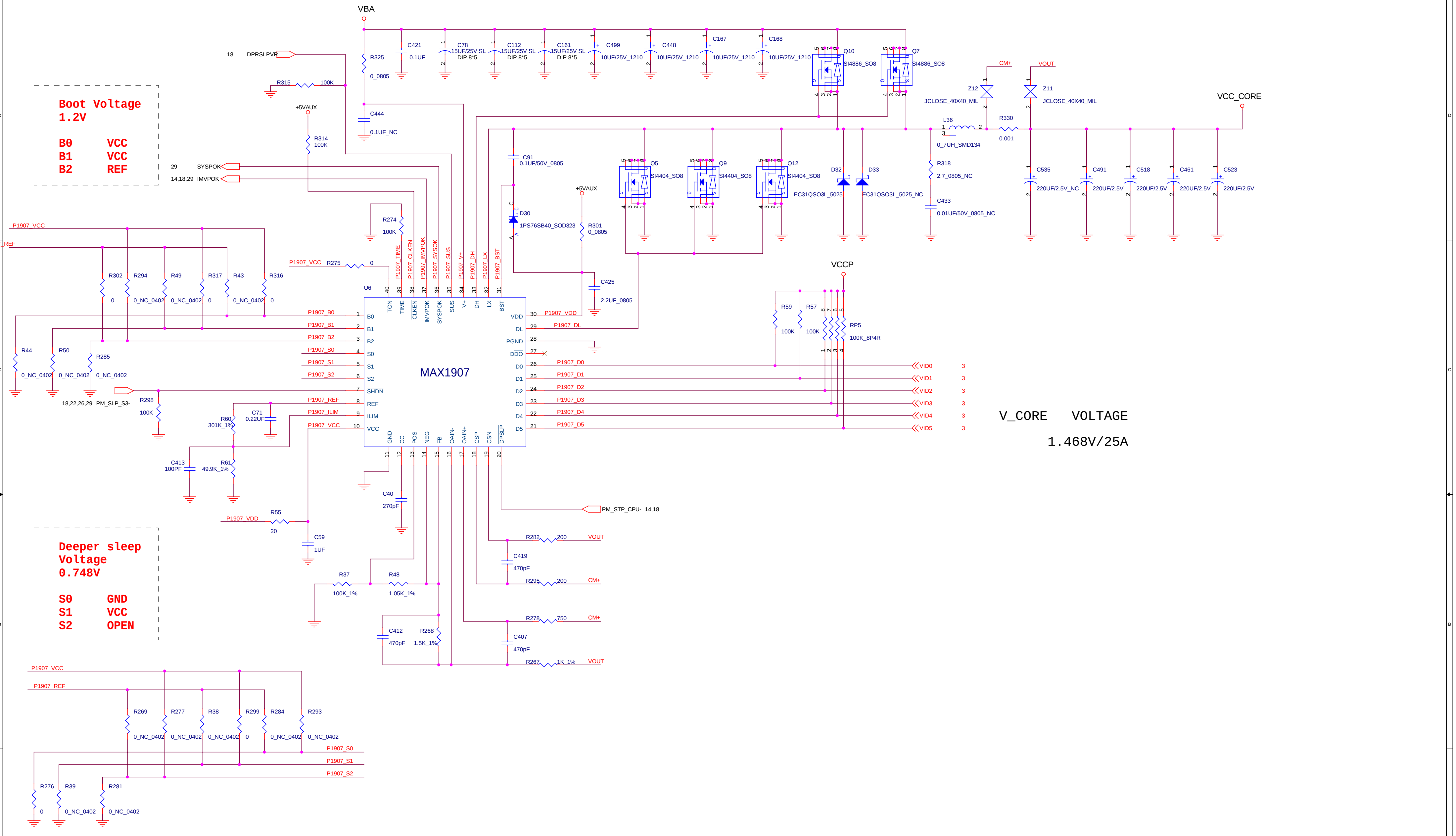
VBA
18 DPRSLPVR
R315 100K
R325 0_0805
C444 0.1UF_NC
C421 0.1UF
C78 15UF/25V SL DIP 8*5
C112 15UF/25V SL DIP 8*5
C161 15UF/25V SL DIP 8*5
C499 10UF/25V_1210
C448 10UF/25V_1210
C167 10UF/25V_1210
C168 10UF/25V_1210
Q10 SI4886_SO8
Q7 SI4886_SO8
CM+
VOUT
Z12 JCLOSE_40X40_MIL
Z11 JCLOSE_40X40_MIL
VCC_CORE
L36 0_7UH_SMD134
R330 0.001
R318 2.7_0805_NC
C433 0.01UF/50V_0805_NC
C535 220UF/2.5V_NC
C491 220UF/2.5V
C518 220UF/2.5V
C461 220UF/2.5V
C523 220UF/2.5V
+5VAUX
R314 100K
29 SYSPOK
14,18,29 IMVPOK
C91 0.1UF/50V_0805
D30 1PS76SB40_SOD323
Q5 SI4404_SO8
Q9 SI4404_SO8
Q12 SI4404_SO8
D32 EC31QSO3L_5025
D33 EC31QSO3L_5025_NC
R301 0_0805
R274 100K
P1907_VCC
P1907_REF
R302 0
R294 0_NC_0402
R49 0_NC_0402
R317 0
R43 0_NC_0402
R316 0
R275 0
C425 2.2UF_0805
U6
MAX1907
P1907_TIME
P1907_CLKEN
P1907_IMVPOK
P1907_SYSOK
P1907_SUS
P1907_V+
P1907_DH
P1907_LX
P1907_BST
TON TIME CLKEN IMVPOK SYSPOK SUS V+ DH LX BST
B0 B1 B2 S0 S1 S2 SHDN REF ILIM VCC
VDD DL PGND DDO D0 D1 D2 D3 D4 D5
GND CC POS NEG FB OAIN- OAIN+ CSP CSN DPSLP
P1907_B0
P1907_B1
P1907_B2
P1907_S0
P1907_S1
P1907_S2
P1907_ILIM
P1907_VDD
P1907_DL
P1907_D0
P1907_D1
P1907_D2
P1907_D3
P1907_D4
P1907_D5
VCCP
R59 100K
R57 100K
RP5 100K_8P4R
VID0 3
VID1 3
VID2 3
VID3 3
VID4 3
VID5 3
R44 0_NC_0402
R50 0_NC_0402
R285 0_NC_0402
18,22,26,29 PM_SLP_S3-
R298 100K
R60 301K_1%
C71 0.22UF
C413 100PF
R61 49.9K_1%
R55 20
C59 1UF
C40 270pF
PM_STP_CPU- 14,18
R282 200
C419 470pF
R295 200
R37 100K_1%
R48 1.05K_1%
R278 750
C412 470pF
R268 1.5K_1%
C407 470pF
R267 1K_1%
R269 0_NC_0402
R277 0_NC_0402
R38 0_NC_0402
R299 0
R284 0_NC_0402
R293 0_NC_0402
R276 0
R39 0_NC_0402
R281 0_NC_0402

**Boot Voltage 1.2V**

| | |
|---|---|
| B0 | VCC |
| B1 | VCC |
| B2 | REF |

**Deeper sleep Voltage 0.748V**

| | |
|---|---|
| S0 | GND |
| S1 | VCC |
| S2 | OPEN |

V_CORE VOLTAGE

1.468V/25A

ECS CORPORATION

Title
G551 V_CORE MAX1907

Size A2
Document Number G551-1-4-01
Rev 1.0

Date: Thursday, May 29, 2003
Sheet 33 of 36

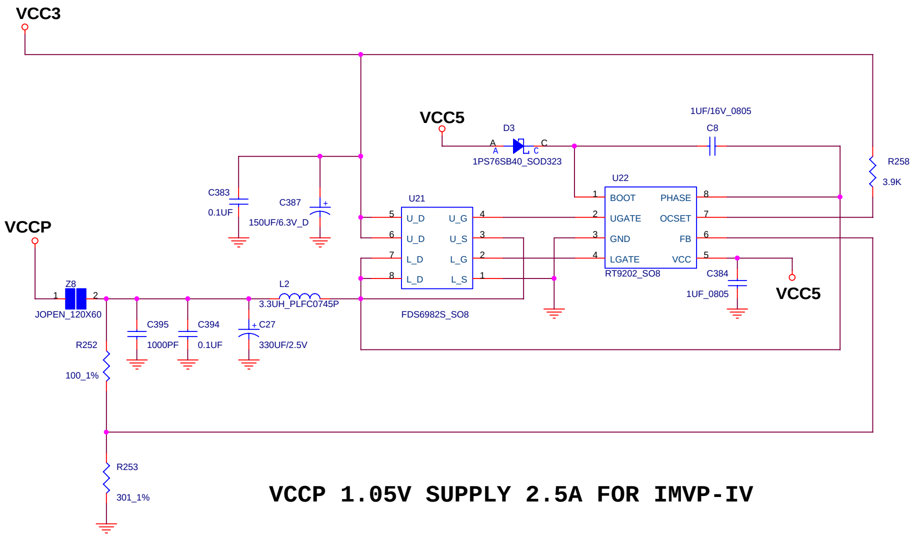
VCC3
VCC5
D3
A
C
1PS76SB40_SOD323
1UF/16V_0805
C8
R258
3.9K
U22
BOOT
PHASE
UGATE
OCSET
GND
FB
LGATE
VCC
RT9202_SO8
C384
1UF_0805
VCC5
C383
0.1UF
C387
150UF/6.3V_D
U21
U_D
U_G
U_S
L_D
L_G
L_S
FDS6982S_SO8
VCCP
Z8
JOPEN_120X60
L2
3.3UH_PLFC0745P
C395
1000PF
C394
0.1UF
C27
330UF/2.5V
R252
100_1%
R253
301_1%

VCCP 1.05V SUPPLY 2.5A FOR IMVP-IV

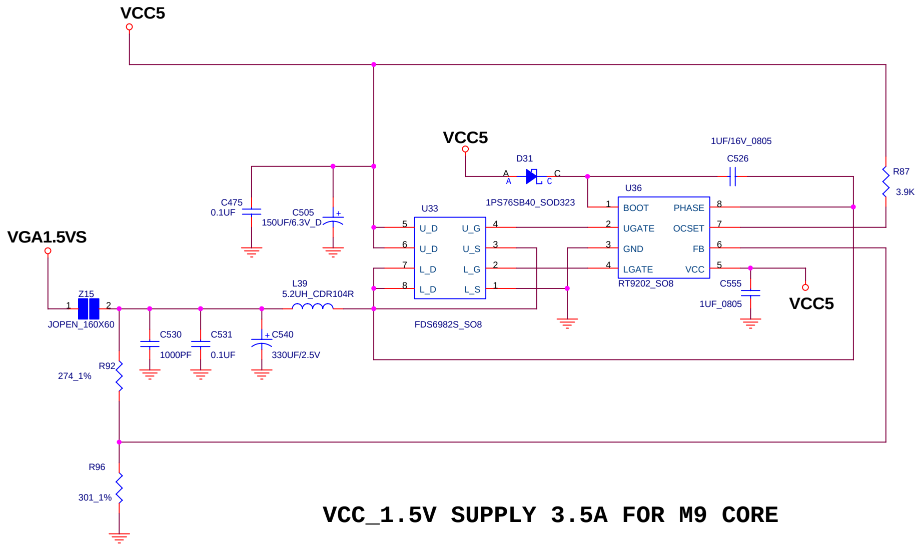
VCC5
VCC5
D31
A
C
1PS76SB40_SOD323
1UF/16V_0805
C526
R87
3.9K
U36
BOOT
PHASE
UGATE
OCSET
GND
FB
LGATE
VCC
RT9202_SO8
C555
1UF_0805
VCC5
C475
0.1UF
C505
150UF/6.3V_D
U33
U_D
U_G
U_S
L_D
L_G
L_S
FDS6982S_SO8
VGA1.5VS
Z15
JOPEN_160X60
L39
5.2UH_CDR104R
C530
1000PF
C531
0.1UF
C540
330UF/2.5V
R92
274_1%
R96
301_1%

VCC_1.5V SUPPLY 3.5A FOR M9 CORE

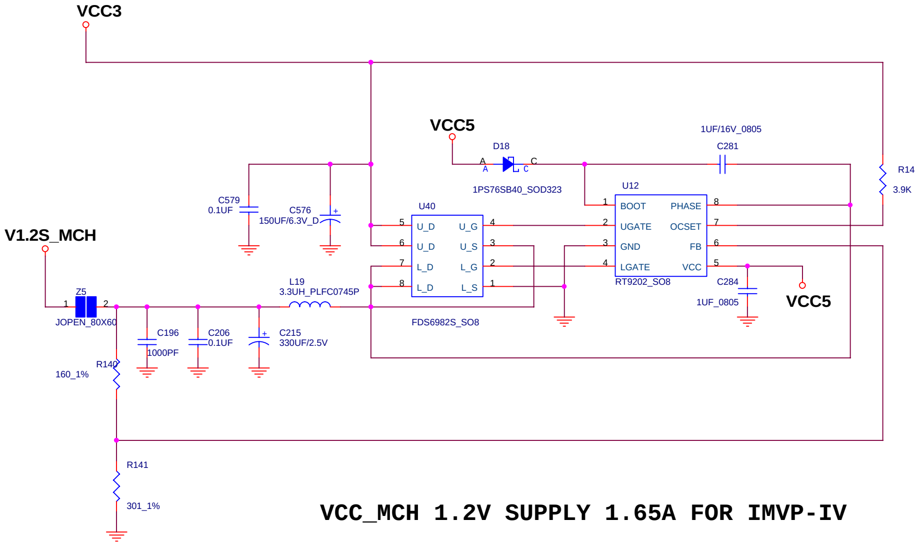
VCC3
VCC5
D18
A
C
1PS76SB40_SOD323
1UF/16V_0805
C281
R142
3.9K
U12
BOOT
PHASE
UGATE
OCSET
GND
FB
LGATE
VCC
RT9202_SO8
C284
1UF_0805
VCC5
C579
0.1UF
C576
150UF/6.3V_D
U40
U_D
U_G
U_S
L_D
L_G
L_S
FDS6982S_SO8
V1.2S_MCH
Z5
JOPEN_80X60
L19
3.3UH_PLFC0745P
C196
1000PF
C206
0.1UF
C215
330UF/2.5V
R140
160_1%
R141
301_1%

VCC_MCH 1.2V SUPPLY 1.65A FOR IMVP-IV

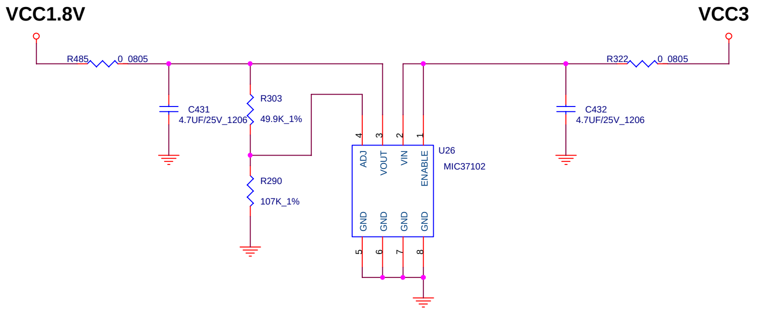
VCC1.8V
VCC3
R485
0_0805
R322
0_0805
C431
4.7UF/25V_1206
R303
49.9K_1%
R290
107K_1%
C432
4.7UF/25V_1206
U26
MIC37102
ADJ
VOUT
VIN
ENABLE
GND
GND
GND
GND

VCC 1.8V SUPPLY 350mA FOR M9

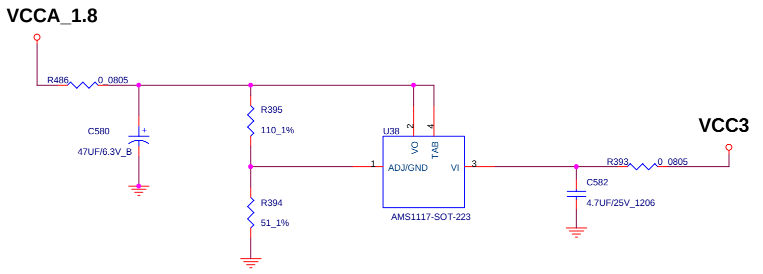
VCCA_1.8
VCC3
R486
0_0805
C580
47UF/6.3V_B
R395
110_1%
R394
51_1%
U38
VO
TAB
ADJ/GND
VI
AMS1117-SOT-223
R393
0_0805
C582
4.7UF/25V_1206

VCC 1.8V SUPPLY FOR CPU & MCH

ECS CORPORATION

Title
G551 VCCA1.8V/VCCP1.05V/VCC_MCH1.2V

| Size | Document Number | Rev |
|---|---|---|
| C | G551-1-4-01 | 1.0 |

Date: Thursday, May 29, 2003
Sheet 34 of 36

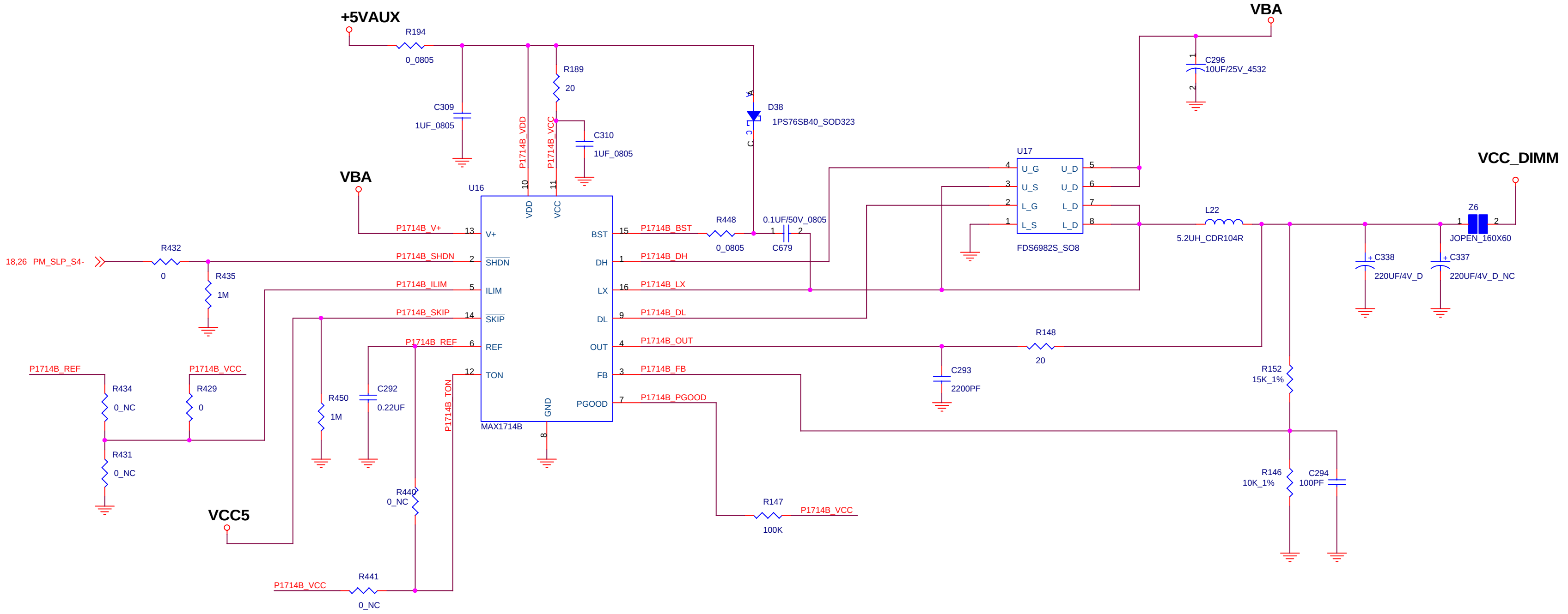
+5VAUX
R194
0_0805
C309
1UF_0805
R189
20
C310
1UF_0805
P1714B_VDD
P1714B_VCC
D38
1PS76SB40_SOD323
A
C
VBA
C296
10UF/25V_4532
U17
U_G
U_S
L_G
L_S
U_D
U_D
L_D
L_D
FDS6982S_SO8
VCC_DIMM
L22
5.2UH_CDR104R
Z6
JOPEN_160X60
C338
220UF/4V_D
C337
220UF/4V_D_NC
VBA
U16
VDD
VCC
V+
SHDN
ILIM
SKIP
REF
TON
BST
DH
LX
DL
OUT
FB
PGOOD
GND
MAX1714B
P1714B_V+
P1714B_SHDN
P1714B_ILIM
P1714B_SKIP
P1714B_REF
P1714B_TON
P1714B_BST
P1714B_DH
P1714B_LX
P1714B_DL
P1714B_OUT
P1714B_FB
P1714B_PGOOD
R448
0_0805
0.1UF/50V_0805
C679
18,26 PM_SLP_S4-
R432
0
R435
1M
P1714B_REF
P1714B_VCC
R434
0_NC
R429
0
R431
0_NC
R450
1M
C292
0.22UF
R440
0_NC
VCC5
P1714B_VCC
R441
0_NC
R148
20
C293
2200PF
R152
15K_1%
R146
10K_1%
C294
100PF
R147
100K
P1714B_VCC

Vi Default : VCC_DIMM

4/22

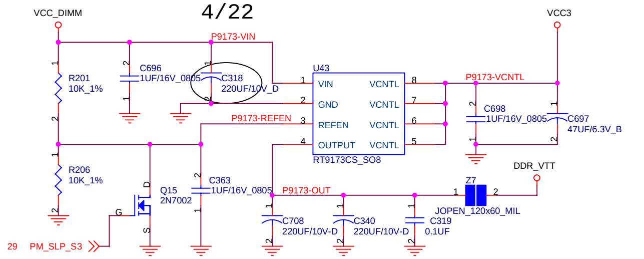
VCC_DIMM
P9173-VIN
R201
10K_1%
C696
1UF/16V_0805
C318
220UF/10V_D
U43
VIN
GND
REFEN
OUTPUT
VCNTL
VCNTL
VCNTL
VCNTL
RT9173CS_SO8
VCC3
P9173-VCNTL
C698
1UF/16V_0805
C697
47UF/6.3V_B
P9173-REFEN
R206
10K_1%
Q15
2N7002
C363
1UF/16V_0805
P9173-OUT
DDR_VTT
Z7
JOPEN_120x60_MIL
C708
220UF/10V-D
C340
220UF/10V-D
C319
0.1UF
29 PM_SLP_S3

**DIMM_2.5V SUPPLY 3.5A & VTT1.25V 1A FOR DDR & M9**

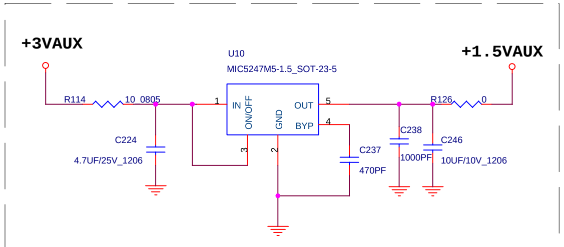
+3VAUX
U10
MIC5247M5-1.5_SOT-23-5
+1.5VAUX
R114
10_0805
IN
ON/OFF
GND
OUT
BYP
R126
0
C224
4.7UF/25V_1206
C237
470PF
C238
1000PF
C246
10UF/10V_1206

**+1.5VAUX SUPPLY 100mA for ICH4-M**

ECS CORPORATION

Title
G551 MAX1714B_DDR2.5 & VTT1.25

Size C
Document Number G551-1-4-01
Rev 2.0

Date: Thursday, May 29, 2003
Sheet 35 of 36

1.0 : Initial Release.

1.A : Fix resume problem for PCMCIA modem card.

Use South Bridge SUS_STAT# pin can control R5C551 HWSUSP# pin but SUS_STAT# pin timing doesn't meet HWSUSP# pin.
Programming GPIO25 to imitate HWSUSP# timing to substitute for SUS_STAT pin.
Delete R100 0 ohm resistor and Add R101 0 ohm resistor.

1.B : To fix no power problem for G551

Solution: To heighten the shock frequency.
Delete C752 10pF capacitor and add C752 33pF capacitor.

1.C : NS 87591 Rev. L shock wrong frequency to result cool boot test fail problem.

Solution: Use capacitor to correct shock frequency.
Delete C752 33pF capacitor and add C752 12pF capacitor.

2.0 : NS 87591 Rev. L shock wrong frequency to result cool boot test fail problem & EMI problem.

Solution: Use CMOS hex inverter IC and EMI spread IC
Delete C681,C318 100UF AND C515,C536 15PF AND R365 1M oh.
Add:U48 4069 IC and u49 P2779A and R500,R501 100 oh
and R515 0 oh and R513,R512 150 oh and R518 33 oh
and C782 0.1uf and C783 270P and 10K.

2.A : G551 VER2.0 EMI SOLUTION

Solution : add C283,C172,C178,C564 10PF capacitance.

ECS CORPORATION
Title: G551 M/B
Size: B
Document Number: G551-1-4-01
Rev: 2.A
Date: Thursday, May 29, 2003
Sheet 36 of 36