G600

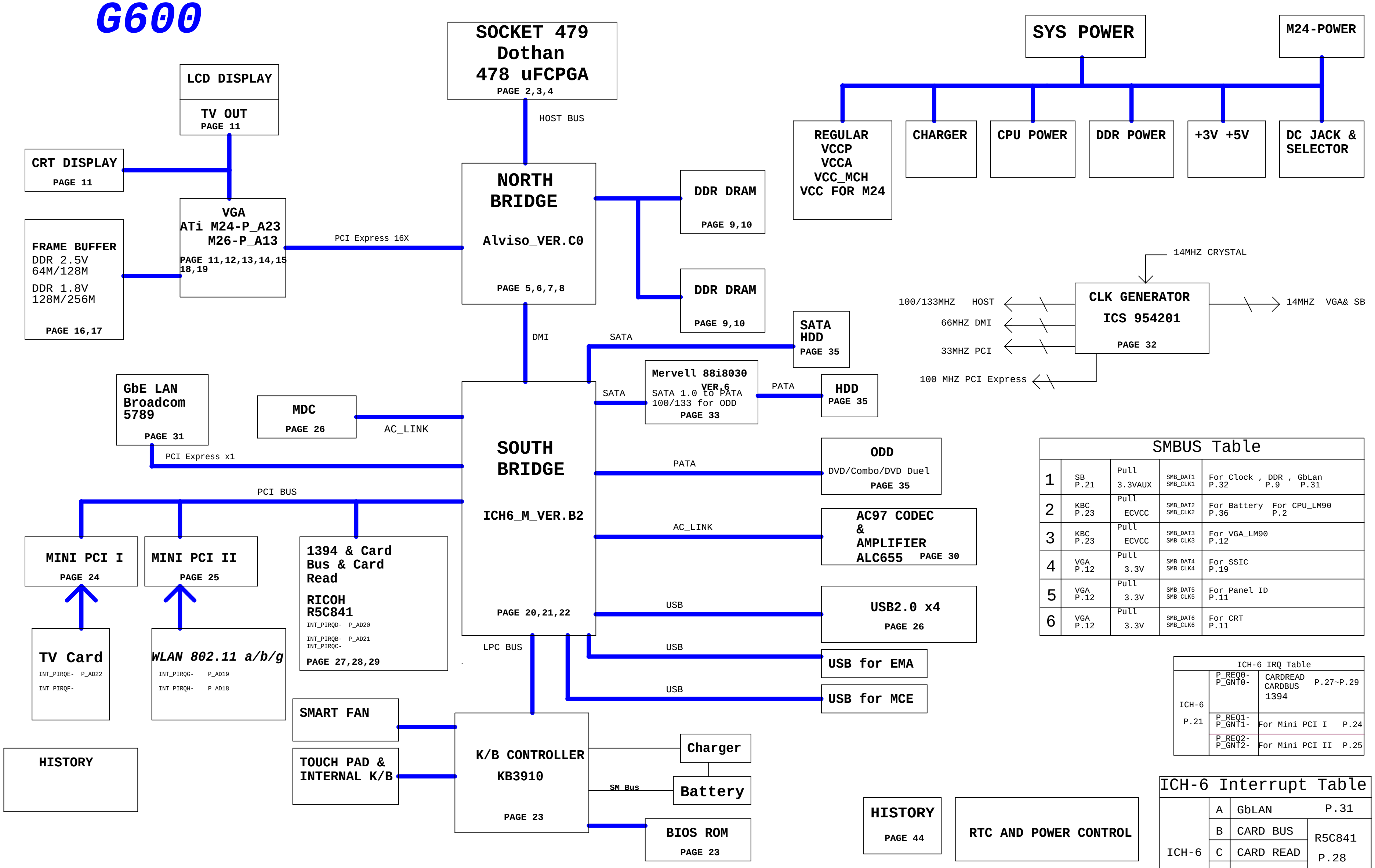
SOCKET 479
Dothan
478 uFCPGA
PAGE 2,3,4
HOST BUS
NORTH BRIDGE
Alviso_VER.C0
PAGE 5,6,7,8
DDR DRAM
PAGE 9,10
DDR DRAM
PAGE 9,10
LCD DISPLAY
TV OUT
PAGE 11
CRT DISPLAY
PAGE 11
VGA
ATi M24-P_A23
M26-P_A13
PAGE 11,12,13,14,15
18,19
PCI Express 16X
FRAME BUFFER
DDR 2.5V
64M/128M
DDR 1.8V
128M/256M
PAGE 16,17
SYS POWER
M24-POWER
REGULAR
VCCP
VCCA
VCC_MCH
VCC FOR M24
CHARGER
CPU POWER
DDR POWER
+3V +5V
DC JACK &
SELECTOR
14MHZ CRYSTAL
CLK GENERATOR
ICS 954201
PAGE 32
100/133MHZ HOST
66MHZ DMI
33MHZ PCI
100 MHZ PCI Express
14MHZ VGA& SB
DMI
SATA
SATA
HDD
PAGE 35
Mervell 88i8030
VER.6
SATA 1.0 to PATA
100/133 for ODD
PAGE 33
SATA
PATA
HDD
PAGE 35
GbE LAN
Broadcom
5789
PAGE 31
PCI Express x1
MDC
PAGE 26
AC_LINK
SOUTH BRIDGE
ICH6_M_VER.B2
PAGE 20,21,22
PATA
ODD
DVD/Combo/DVD Duel
PAGE 35
AC_LINK
AC97 CODEC
&
AMPLIFIER
ALC655 PAGE 30
USB
USB2.0 x4
PAGE 26
USB
USB for EMA
USB
USB for MCE
PCI BUS
MINI PCI I
PAGE 24
MINI PCI II
PAGE 25
1394 & Card
Bus & Card
Read
RICOH
R5C841
INT_PIRQD- P_AD20
INT_PIRQB- P_AD21
INT_PIRQC-
PAGE 27,28,29
TV Card
INT_PIRQE- P_AD22
INT_PIRQF-
WLAN 802.11 a/b/g
INT_PIRQG- P_AD19
INT_PIRQH- P_AD18
LPC BUS
SMART FAN
TOUCH PAD &
INTERNAL K/B
K/B CONTROLLER
KB3910
PAGE 23
Charger
SM Bus
Battery
BIOS ROM
PAGE 23
HISTORY
HISTORY
PAGE 44
RTC AND POWER CONTROL

SMBUS Table

1	SB P.21	Pull 3.3VAUX	SMB_DAT1 SMB_CLK1	For Clock , DDR , GbLan P.32 P.9 P.31
2	KBC P.23	Pull ECVCC	SMB_DAT2 SMB_CLK2	For Battery For CPU_LM90 P.36 P.2
3	KBC P.23	Pull ECVCC	SMB_DAT3 SMB_CLK3	For VGA_LM90 P.12
4	VGA P.12	Pull 3.3V	SMB_DAT4 SMB_CLK4	For SSIC P.19
5	VGA P.12	Pull 3.3V	SMB_DAT5 SMB_CLK5	For Panel ID P.11
6	VGA P.12	Pull 3.3V	SMB_DAT6 SMB_CLK6	For CRT P.11

ICH-6 IRQ Table

ICH-6 P.21	P_REQ0- P_GNT0-	CARDREAD CARDBUS 1394	P.27~P.29
	P_REQ1- P_GNT1-	For Mini PCI I	P.24
	P_REQ2- P_GNT2-	For Mini PCI II	P.25

ICH-6 Interrupt Table

ICH-6 P.21	A	GbLAN	P.31
	B	CARD BUS	R5C841 P.28
	C	CARD READ	
	D	1394	
	E	MiniPCI I	P.24
	F		
	G	MiniPCI II	P.25
	H		

PAGE	1	2	3	4	5	6	7	8	9	10	11	12	13	14	15	16	17	18	19	20	21	22	23
REV	1.D	1.0	1.0	1.0	1.0	1.0	1.0	1.0	1.0	1.0	1.A	1.0	1.0	1.0	1.0	1.0	1.0	1.0	1.0	1.0	1.D	1.0	1.D
DATE	9/2 2005	4/6 2005	4/6 2005	4/6 2005	4/6 2005	4/6 2005	4/6 2005	4/6 2005	4/6 2005	4/6 2005	4/27 2005	4/6 2005	4/6 2005	4/6 2005	4/6 2005	4/6 2005	4/6 2005	4/6 2005	4/6 2005	4/6 2005	9/2 2005	4/6 2005	9/2 2005

PAGE	24	25	26	27	28	29	30	31	32	33	34	35	36	37	38	39	40	41	42	43	44
REV	1.0	1.0	1.A	1.0	1.0	1.0	1.0	1.0	1.0	1.0	1.D	1.0	1.0	1.B	1.B	1.B	1.0	1.0	1.D	1.0	1.D
DATE	4/6 2005	4/6 2005	4/27 2005	4/6 2005	4/6 2005	4/6 2005	4/6 2005	4/6 2005	4/6 2005	4/6 2005	9/2 2005	4/6 2005	4/6 2005	5/30 2005	5/30 2005	5/30 2005	4/6 2005	4/6 2005	9/2 2005	4/6 2005	9/2 2005

PCB 1.0 NO:15-F53-011000

Diễn Đàn
KyThuatViTinh.Com
Digitally signed by fdsf
DN: cn=fdsf, o=fsdfsd, ou=ffsdf, email=fdfsd@fsdff, c=US
Date: 2010.01.06 06:04:38 +07'00'

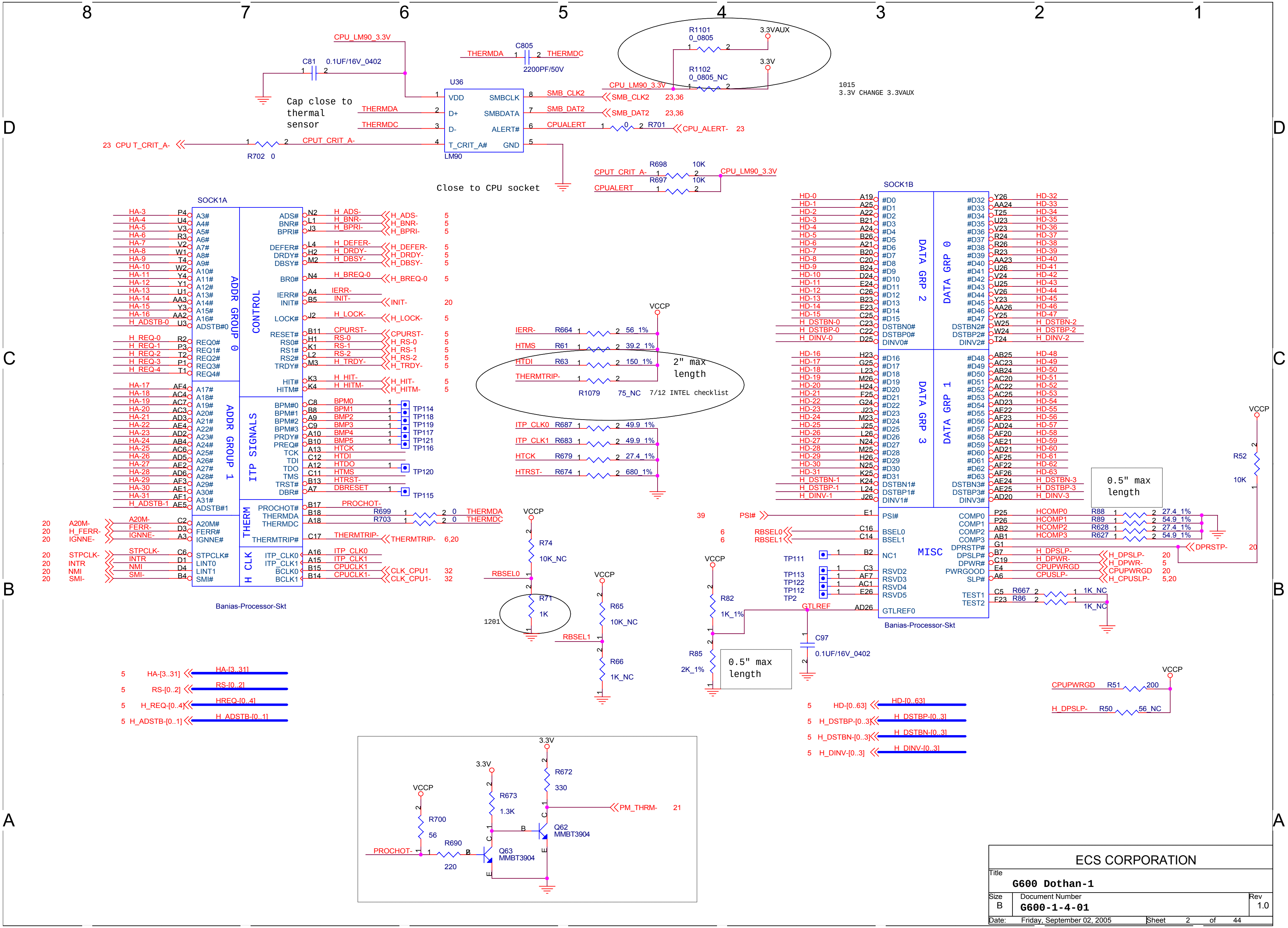

Cap close to thermal sensor
Close to CPU socket
CPU_LM90_3.3V
C81 0.1UF/16V_0402
C805 2200PF/50V
THERMDA
THERMDC
U36 LM90
VDD
D+
D-
T_CRIT_A#
SMBCLK
SMBDATA
ALERT#
GND
SMB_CLK2
SMB_DAT2
CPUALERT
CPU_ALERT- 23
23,36
R701 0
23 CPU T_CRIT_A-
CPUT_CRIT_A-
R702 0
R1101 0_0805
R1102 0_0805_NC
3.3VAUX
3.3V
1015
3.3V CHANGE 3.3VAUX
R698 10K
R697 10K
CPUT_CRIT_A-
SOCK1A
ADDR GROUP 0
ADDR GROUP 1
CONTROL
ITP SIGNALS
THERM
H CLK
Banias-Processor-Skt
VCCP
R664 56_1%
R61 39.2_1%
R63 150_1%
R1079 75_NC
IERR-
HTMS
HTDI
THERMTRIP-
2" max length
7/12 INTEL checklist
ITP_CLK0 R687 49.9_1%
ITP_CLK1 R683 49.9_1%
HTCK R679 27.4_1%
HTRST- R674 680_1%
R699 0 THERMDA
R703 0 THERMDC
THERMTRIP- 6,20
CLK_CPU1 32
CLK_CPU1- 32
TP114 TP118 TP119 TP117 TP121 TP116 TP120 TP115
R74 10K_NC
RBSEL0
R71 1K
1201
R65 10K_NC
RBSEL1
R66 1K_NC
R82 1K_1%
R85 2K_1%
0.5" max length
GTLREF
C97 0.1UF/16V_0402
SOCK1B
DATA GRP 0
DATA GRP 1
DATA GRP 2
DATA GRP 3
MISC
Banias-Processor-Skt
PSI# 39
RBSEL0 6
RBSEL1 6
TP111 TP113 TP122 TP112 TP2
HCOMP0 R88 27.4_1%
HCOMP1 R89 54.9_1%
HCOMP2 R628 27.4_1%
HCOMP3 R627 54.9_1%
DPRSTP- 20
H_DPSLP- 20
H_DPWR- 5
CPUPWRGD 20
H_CPUSLP- 5,20
R52 10K
R667 1K_NC
R86 1K_NC
0.5" max length
CPUPWRGD R51 200
H_DPSLP- R50 56_NC
5 HA-[3..31]
5 RS-[0..2]
5 H_REQ-[0..4]
5 H_ADSTB-[0..1]
5 HD-[0..63]
5 H_DSTBP-[0..3]
5 H_DSTBN-[0..3]
5 H_DINV-[0..3]
20 A20M-
20 H_FERR-
20 IGNNE-
20 STPCLK-
20 INTR
20 NMI
20 SMI-
R700 56
R690 220
R673 1.3K
R672 330
Q63 MMBT3904
Q62 MMBT3904
PROCHOT-
PM_THRM- 21

ECS CORPORATION

Title
G600 Dothan-1

Size B
Document Number **G600-1-4-01**
Rev 1.0

Date: Friday, September 02, 2005
Sheet 2 of 44

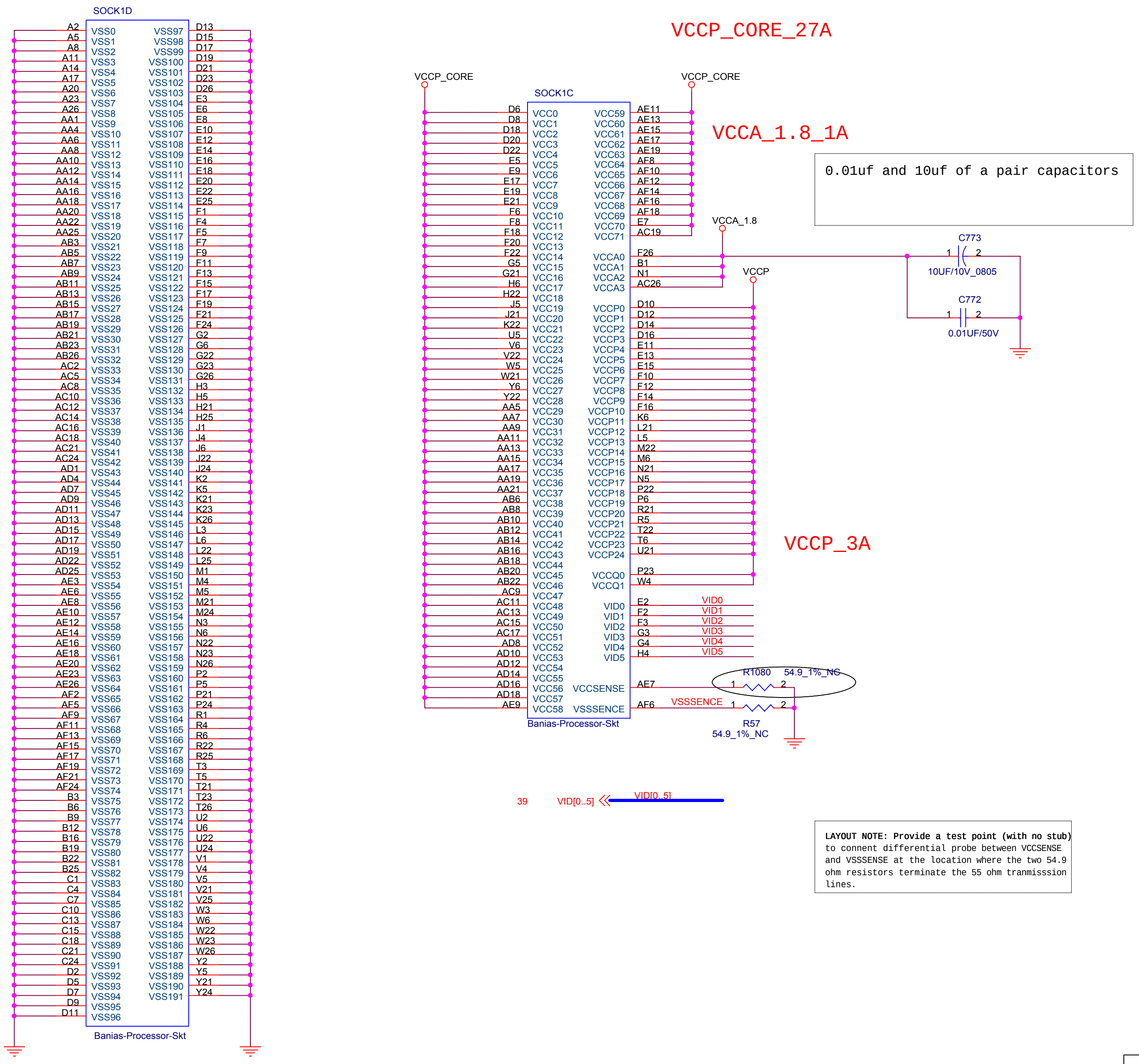
SOCK1D
A2 VSS0 VSS97 D13
A5 VSS1 VSS98 D15
A8 VSS2 VSS99 D17
A11 VSS3 VSS100 D19
A14 VSS4 VSS101 D21
A17 VSS5 VSS102 D23
A20 VSS6 VSS103 D26
A23 VSS7 VSS104 E3
A26 VSS8 VSS105 E6
AA1 VSS9 VSS106 E8
AA4 VSS10 VSS107 E10
AA6 VSS11 VSS108 E12
AA8 VSS12 VSS109 E14
AA10 VSS13 VSS110 E16
AA12 VSS14 VSS111 E18
AA14 VSS15 VSS112 E20
AA16 VSS16 VSS113 E22
AA18 VSS17 VSS114 E25
AA20 VSS18 VSS115 F1
AA22 VSS19 VSS116 F4
AA25 VSS20 VSS117 F5
AB3 VSS21 VSS118 F7
AB5 VSS22 VSS119 F9
AB7 VSS23 VSS120 F11
AB9 VSS24 VSS121 F13
AB11 VSS25 VSS122 F15
AB13 VSS26 VSS123 F17
AB15 VSS27 VSS124 F19
AB17 VSS28 VSS125 F21
AB19 VSS29 VSS126 F24
AB21 VSS30 VSS127 G2
AB23 VSS31 VSS128 G6
AB26 VSS32 VSS129 G22
AC2 VSS33 VSS130 G23
AC5 VSS34 VSS131 G26
AC8 VSS35 VSS132 H3
AC10 VSS36 VSS133 H5
AC12 VSS37 VSS134 H21
AC14 VSS38 VSS135 H25
AC16 VSS39 VSS136 J1
AC18 VSS40 VSS137 J4
AC21 VSS41 VSS138 J6
AC24 VSS42 VSS139 J22
AD1 VSS43 VSS140 J24
AD4 VSS44 VSS141 K2
AD7 VSS45 VSS142 K5
AD9 VSS46 VSS143 K21
AD11 VSS47 VSS144 K23
AD13 VSS48 VSS145 K26
AD15 VSS49 VSS146 L3
AD17 VSS50 VSS147 L6
AD19 VSS51 VSS148 L22
AD22 VSS52 VSS149 L25
AD25 VSS53 VSS150 M1
AE3 VSS54 VSS151 M4
AE6 VSS55 VSS152 M5
AE8 VSS56 VSS153 M21
AE10 VSS57 VSS154 M24
AE12 VSS58 VSS155 N3
AE14 VSS59 VSS156 N6
AE16 VSS60 VSS157 N22
AE18 VSS61 VSS158 N23
AE20 VSS62 VSS159 N26
AE23 VSS63 VSS160 P2
AE26 VSS64 VSS161 P5
AF2 VSS65 VSS162 P21
AF5 VSS66 VSS163 P24
AF9 VSS67 VSS164 R1
AF11 VSS68 VSS165 R4
AF13 VSS69 VSS166 R6
AF15 VSS70 VSS167 R22
AF17 VSS71 VSS168 R25
AF19 VSS72 VSS169 T3
AF21 VSS73 VSS170 T5
AF24 VSS74 VSS171 T21
B3 VSS75 VSS172 T23
B6 VSS76 VSS173 T26
B9 VSS77 VSS174 U2
B12 VSS78 VSS175 U6
B16 VSS79 VSS176 U22
B19 VSS80 VSS177 U24
B22 VSS81 VSS178 V1
B25 VSS82 VSS179 V4
C1 VSS83 VSS180 V5
C4 VSS84 VSS181 V21
C7 VSS85 VSS182 V25
C10 VSS86 VSS183 W3
C13 VSS87 VSS184 W6
C15 VSS88 VSS185 W22
C18 VSS89 VSS186 W23
C21 VSS90 VSS187 W26
C24 VSS91 VSS188 Y2
D2 VSS92 VSS189 Y5
D5 VSS93 VSS190 Y21
D7 VSS94 VSS191 Y24
D9 VSS95
D11 VSS96
Banias-Processor-Skt
VCCP_CORE_27A
VCCP_CORE
VCCP_CORE
SOCK1C
D6 VCC0 VCC59 AE11
D8 VCC1 VCC60 AE13
D18 VCC2 VCC61 AE15
D20 VCC3 VCC62 AE17
D22 VCC4 VCC63 AE19
E5 VCC5 VCC64 AF8
E9 VCC6 VCC65 AF10
E17 VCC7 VCC66 AF12
E19 VCC8 VCC67 AF14
E21 VCC9 VCC68 AF16
F6 VCC10 VCC69 AF18
F8 VCC11 VCC70 E7
F18 VCC12 VCC71 AC19
F20 VCC13
F22 VCC14 VCCA0 F26
G5 VCC15 VCCA1 B1
G21 VCC16 VCCA2 N1
H6 VCC17 VCCA3 AC26
H22 VCC18
J5 VCC19 VCCP0 D10
J21 VCC20 VCCP1 D12
K22 VCC21 VCCP2 D14
U5 VCC22 VCCP3 D16
V6 VCC23 VCCP4 E11
V22 VCC24 VCCP5 E13
W5 VCC25 VCCP6 E15
W21 VCC26 VCCP7 F10
Y6 VCC27 VCCP8 F12
Y22 VCC28 VCCP9 F14
AA5 VCC29 VCCP10 F16
AA7 VCC30 VCCP11 K6
AA9 VCC31 VCCP12 L21
AA11 VCC32 VCCP13 L5
AA13 VCC33 VCCP14 M22
AA15 VCC34 VCCP15 M6
AA17 VCC35 VCCP16 N21
AA19 VCC36 VCCP17 N5
AA21 VCC37 VCCP18 P22
AB6 VCC38 VCCP19 P6
AB8 VCC39 VCCP20 R21
AB10 VCC40 VCCP21 R5
AB12 VCC41 VCCP22 T22
AB14 VCC42 VCCP23 T6
AB16 VCC43 VCCP24 U21
AB18 VCC44
AB20 VCC45 VCCQ0 P23
AB22 VCC46 VCCQ1 W4
AC9 VCC47
AC11 VCC48 VID0 E2 VID0
AC13 VCC49 VID1 F2 VID1
AC15 VCC50 VID2 F3 VID2
AC17 VCC51 VID3 G3 VID3
AD8 VCC52 VID4 G4 VID4
AD10 VCC53 VID5 H4 VID5
AD12 VCC54
AD14 VCC55
AD16 VCC56 VCCSENSE AE7
AD18 VCC57
AE9 VCC58 VSSSENCE AF6 VSSSENCE
Banias-Processor-Skt
VCCA_1.8_1A
VCCA_1.8
VCCP
C773
1 2
10UF/10V_0805
C772
1 2
0.01UF/50V
VCCP_3A
R1080 54.9_1%_NC
1 2
1 2
R57
54.9_1%_NC
39 VID[0..5]
VID[0..5]

0.01uf and 10uf of a pair capacitors

LAYOUT NOTE: Provide a test point (with no stub) to connent differential probe between VCCSENSE and VSSSENSE at the location where the two 54.9 ohm resistors terminate the 55 ohm tranmisssion lines.

ECS CORPORATION

Title
G600 Dothan-2

Size	Document Number	Rev
B	**G600-1-4-01**	1.0

Date: Friday, September 02, 2005 Sheet 3 of 44

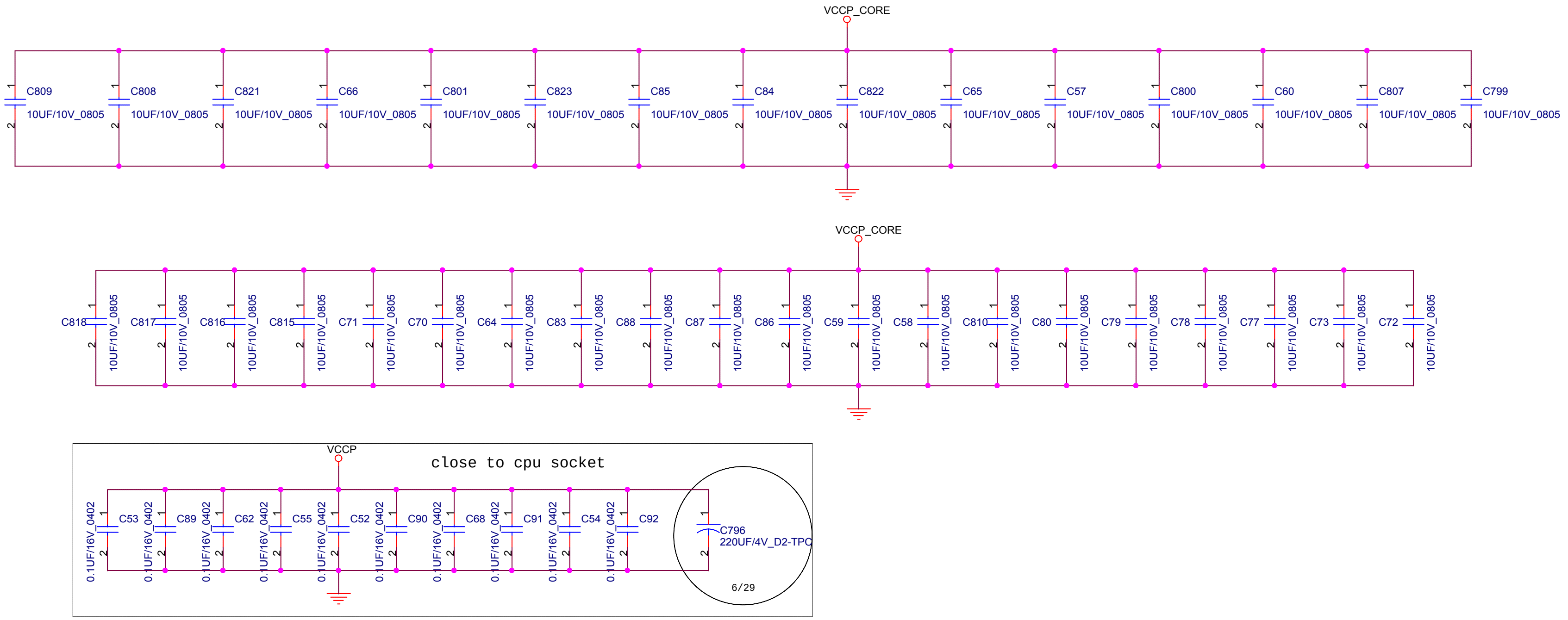
VCCP_CORE
C809 10UF/10V_0805
C808 10UF/10V_0805
C821 10UF/10V_0805
C66 10UF/10V_0805
C801 10UF/10V_0805
C823 10UF/10V_0805
C85 10UF/10V_0805
C84 10UF/10V_0805
C822 10UF/10V_0805
C65 10UF/10V_0805
C57 10UF/10V_0805
C800 10UF/10V_0805
C60 10UF/10V_0805
C807 10UF/10V_0805
C799 10UF/10V_0805
VCCP_CORE
C818 10UF/10V_0805
C817 10UF/10V_0805
C816 10UF/10V_0805
C815 10UF/10V_0805
C71 10UF/10V_0805
C70 10UF/10V_0805
C64 10UF/10V_0805
C83 10UF/10V_0805
C88 10UF/10V_0805
C87 10UF/10V_0805
C86 10UF/10V_0805
C59 10UF/10V_0805
C58 10UF/10V_0805
C810 10UF/10V_0805
C80 10UF/10V_0805
C79 10UF/10V_0805
C78 10UF/10V_0805
C77 10UF/10V_0805
C73 10UF/10V_0805
C72 10UF/10V_0805
VCCP
close to cpu socket
C53 0.1UF/16V_0402
C89 0.1UF/16V_0402
C62 0.1UF/16V_0402
C55 0.1UF/16V_0402
C52 0.1UF/16V_0402
C90 0.1UF/16V_0402
C68 0.1UF/16V_0402
C91 0.1UF/16V_0402
C54 0.1UF/16V_0402
C92 0.1UF/16V_0402
C796 220UF/4V_D2-TPC
6/29

ECS CORPORATION

Title
G600 Dothan-3

Size
B

Document Number
G600-1-4-01

Rev
1.0

Date: Friday, September 02, 2005
Sheet 4 of 44

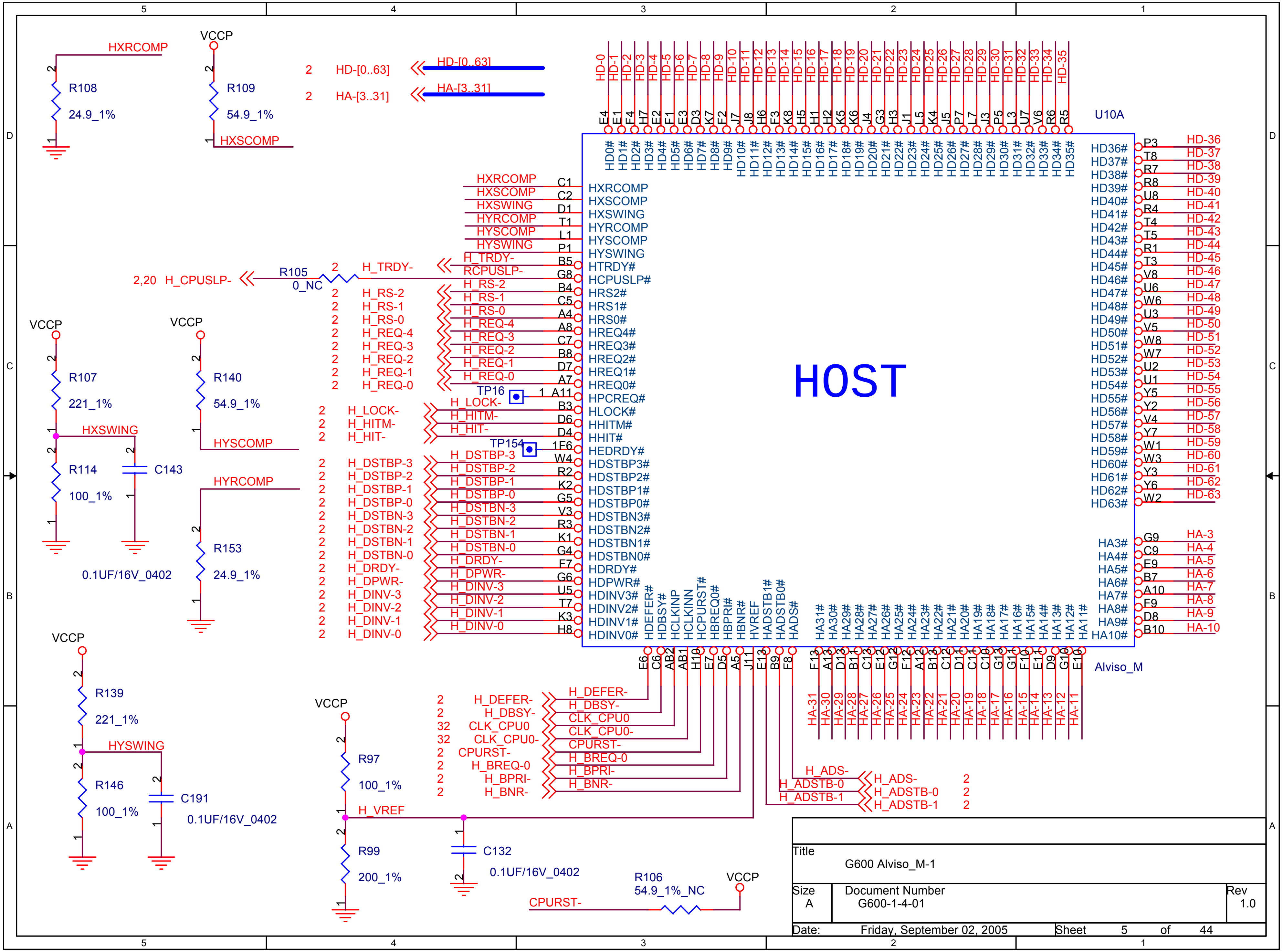
HOST
U10A
Alviso_M
HD-[0..63]
HA-[3..31]
HXRCOMP
HXSCOMP
HXSWING
HYRCOMP
HYSCOMP
HYSWING
VCCP
R108 24.9_1%
R109 54.9_1%
R107 221_1%
R140 54.9_1%
R114 100_1%
C143 0.1UF/16V_0402
R153 24.9_1%
R139 221_1%
R146 100_1%
C191 0.1UF/16V_0402
R97 100_1%
R99 200_1%
H_VREF
C132 0.1UF/16V_0402
R106 54.9_1%_NC
CPURST-
R105 0_NC
2,20 H_CPUSLP-
H_TRDY-
H_RS-2
H_RS-1
H_RS-0
H_REQ-4
H_REQ-3
H_REQ-2
H_REQ-1
H_REQ-0
TP16
TP154
H_LOCK-
H_HITM-
H_HIT-
H_DSTBP-3
H_DSTBP-2
H_DSTBP-1
H_DSTBP-0
H_DSTBN-3
H_DSTBN-2
H_DSTBN-1
H_DSTBN-0
H_DRDY-
H_DPWR-
H_DINV-3
H_DINV-2
H_DINV-1
H_DINV-0
H_DEFER-
H_DBSY-
CLK_CPU0
CLK_CPU0-
CPURST-
H_BREQ-0
H_BPRI-
H_BNR-
H_ADS-
H_ADSTB-0
H_ADSTB-1
HTRDY#
HCPUSLP#
HRS2#
HRS1#
HRS0#
HREQ4#
HREQ3#
HREQ2#
HREQ1#
HREQ0#
HPCREQ#
HLOCK#
HHITM#
HHIT#
HEDRDY#
HDSTBP3#
HDSTBP2#
HDSTBP1#
HDSTBP0#
HDSTBN3#
HDSTBN2#
HDSTBN1#
HDSTBN0#
HDRDY#
HDPWR#
HDINV3#
HDINV2#
HDINV1#
HDINV0#
HDEFER#
HDBSY#
HCLKINP
HCLKINN
HCPURST#
HBREQ0#
HBPRI#
HBNR#
HVREF
HADSTB1#
HADSTB0#
HADS#
HD0# … HD63#
HA3# … HA31#
HD-0 … HD-63
HA-3 … HA-31

Title
G600 Alviso_M-1

Size A
Document Number G600-1-4-01
Rev 1.0

Date: Friday, September 02, 2005
Sheet 5 of 44

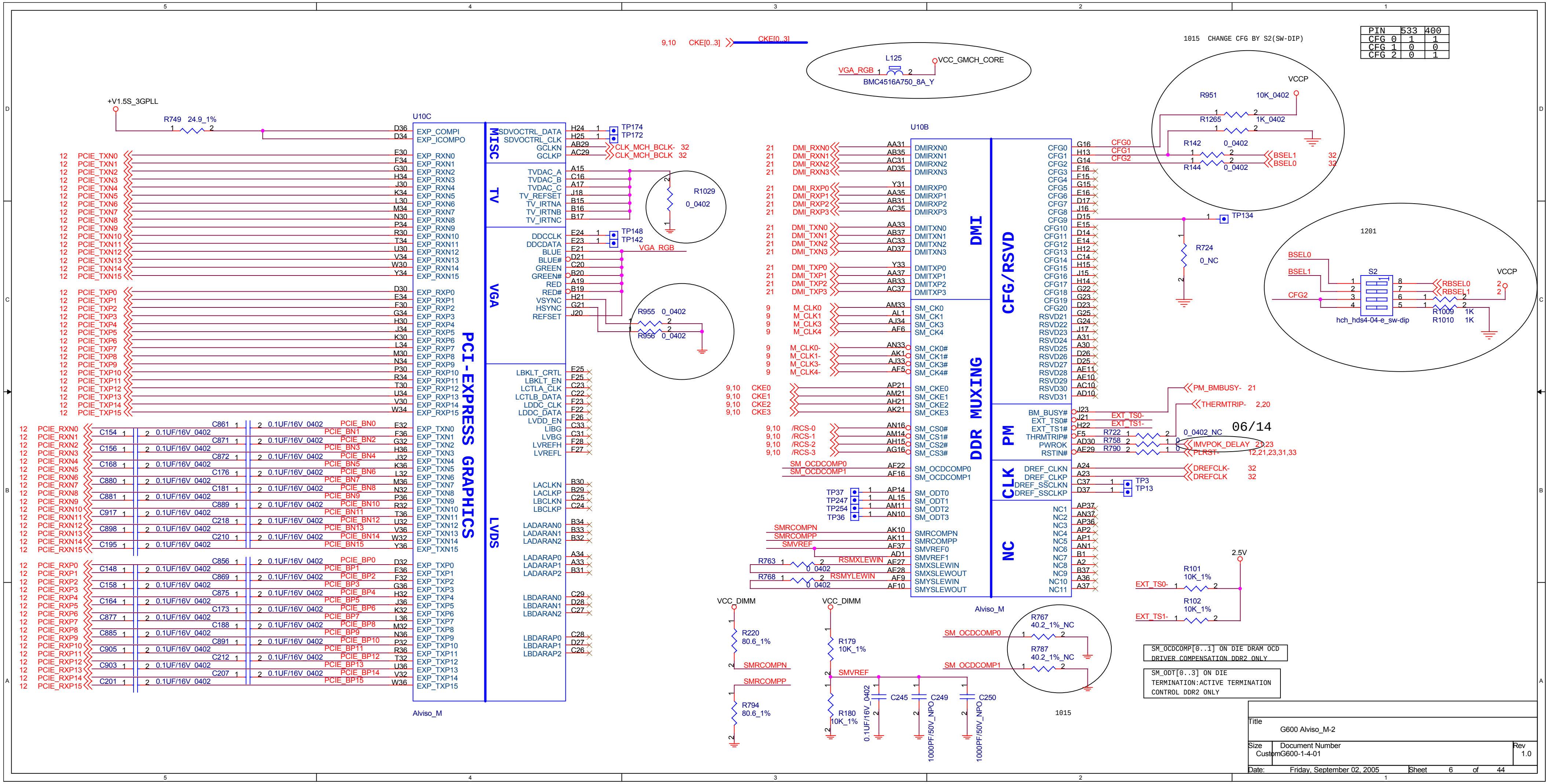

U10C
U10B
Alviso_M
PCI-EXPRESS GRAPHICS
MISC
TV
VGA
LVDS
DMI
DDR MUXING
CFG/RSVD
PM
CLK
NC
+V1.5S_3GPLL
R749 24.9_1%
EXP_COMPI
EXP_ICOMPO
PCIE_TXN0 … PCIE_TXN15
PCIE_TXP0 … PCIE_TXP15
PCIE_RXN0 … PCIE_RXN15
PCIE_RXP0 … PCIE_RXP15
PCIE_BN0 … PCIE_BN15
PCIE_BP0 … PCIE_BP15
0.1UF/16V_0402
SDVOCTRL_DATA
SDVOCTRL_CLK
GCLKN
GCLKP
TP174
TP172
CLK_MCH_BCLK- 32
CLK_MCH_BCLK 32
TVDAC_A
TVDAC_B
TVDAC_C
TV_REFSET
TV_IRTNA
TV_IRTNB
TV_IRTNC
R1029 0_0402
DDCCLK
DDCDATA
BLUE
BLUE#
GREEN
GREEN#
RED
RED#
VSYNC
HSYNC
REFSET
TP148
TP142
VGA_RGB
R955 0_0402
R956 0_0402
LBKLT_CRTL
LBKLT_EN
LCTLA_CLK
LCTLB_DATA
LDDC_CLK
LDDC_DATA
LVDD_EN
LIBG
LVBG
LVREFH
LVREFL
LACLKN
LACLKP
LBCLKN
LBCLKP
LADARAN0
LADARAN1
LADARAN2
LADARAP0
LADARAP1
LADARAP2
LBDARAN0
LBDARAN1
LBDARAN2
LBDARAP0
LBDARAP1
LBDARAP2
9,10 CKE[0..3]
CKE[0..3]
L125
VGA_RGB
VCC_GMCH_CORE
BMC4516A750_8A_Y
DMI_RXN0 … DMI_RXN3
DMI_RXP0 … DMI_RXP3
DMI_TXN0 … DMI_TXN3
DMI_TXP0 … DMI_TXP3
M_CLK0 … M_CLK4
M_CLK0- … M_CLK4-
CKE0 … CKE3
/RCS-0 … /RCS-3
SM_OCDCOMP0
SM_OCDCOMP1
TP37
TP247
TP254
TP36
SM_ODT0 … SM_ODT3
SMRCOMPN
SMRCOMPP
SMVREF
R763 0_0402
R768 0_0402
RSMXLEWIN
RSMYLEWIN
SMVREF0
SMVREF1
SMXSLEWIN
SMXSLEWOUT
SMYSLEWIN
SMYSLEWOUT
CFG0 … CFG20
RSVD21 … RSVD31
CFG0
CFG1
CFG2
VCCP
R951 10K_0402
R1265 1K_0402
R142 0_0402
R144 0_0402
BSEL1 32
BSEL0 32
TP134
R724 0_NC
1201
BSEL0
BSEL1
CFG2
S2
hch_hds4-04-e_sw-dip
RBSEL0
RBSEL1
R1009 1K
R1010 1K
BM_BUSY#
EXT_TS0#
EXT_TS1#
THRMTRIP#
PWROK
RSTIN#
PM_BMBUSY- 21
THERMTRIP- 2,20
EXT_TS0-
EXT_TS1-
R722
R758
R790
0_0402_NC
06/14
IMVPOK_DELAY 21,23
PLRST- 12,21,23,31,33
DREF_CLKN
DREF_CLKP
DREF_SSCLKN
DREF_SSCLKP
DREFCLK- 32
DREFCLK 32
TP3
TP13
NC1 … NC11
2.5V
R101 10K_1%
R102 10K_1%
VCC_DIMM
R220 80.6_1%
R794 80.6_1%
R179 10K_1%
R180 10K_1%
C245
C249
C250
0.1UF/16V_0402
1000PF/50V_NPO
R767 40.2_1%_NC
R787 40.2_1%_NC
1015

1015 CHANGE CFG BY S2(SW-DIP)

PIN	533	400
CFG 0	1	1
CFG 1	0	0
CFG 2	0	1

SM_OCDCOMP[0..1] ON DIE DRAM OCD DRIVER COMPENSATION DDR2 ONLY

SM_ODT[0..3] ON DIE TERMINATION:ACTIVE TERMINATION CONTROL DDR2 ONLY

Title: G600 Alviso_M-2
Size: Custom
Document Number: G600-1-4-01
Rev: 1.0
Date: Friday, September 02, 2005
Sheet 6 of 44

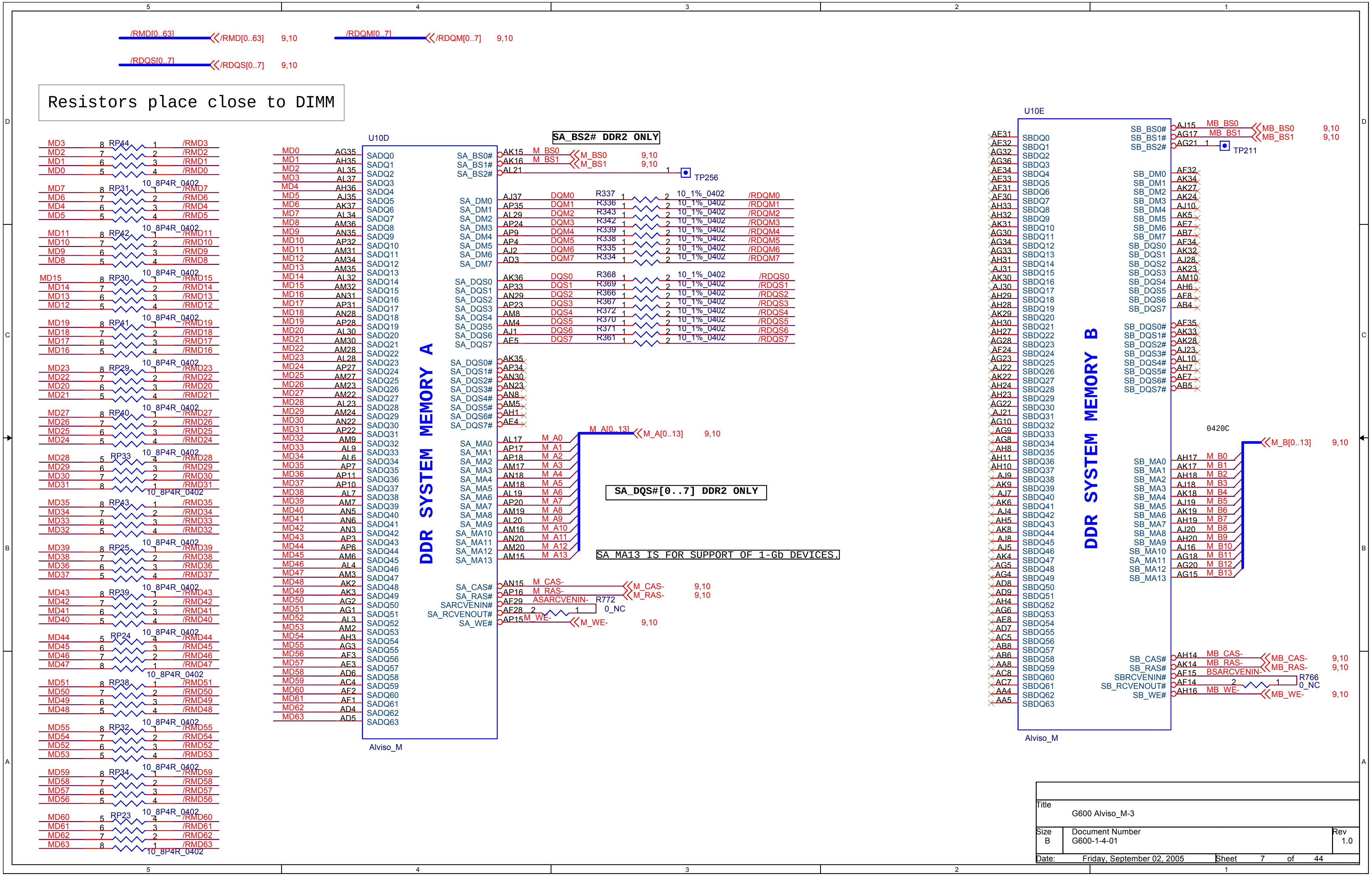
/RMD[0..63]
/RMD[0..63] 9,10
/RDQM[0..7]
/RDQM[0..7] 9,10
/RDQS[0..7]
/RDQS[0..7] 9,10
Resistors place close to DIMM
RP44 10_8P4R_0402 MD3 /RMD3 MD2 /RMD2 MD1 /RMD1 MD0 /RMD0
RP31 10_8P4R_0402 MD7 /RMD7 MD6 /RMD6 MD4 /RMD4 MD5 /RMD5
RP42 10_8P4R_0402 MD11 /RMD11 MD10 /RMD10 MD9 /RMD9 MD8 /RMD8
RP30 10_8P4R_0402 MD15 /RMD15 MD14 /RMD14 MD13 /RMD13 MD12 /RMD12
RP41 10_8P4R_0402 MD19 /RMD19 MD18 /RMD18 MD17 /RMD17 MD16 /RMD16
RP29 10_8P4R_0402 MD23 /RMD23 MD22 /RMD22 MD20 /RMD20 MD21 /RMD21
RP40 10_8P4R_0402 MD27 /RMD27 MD26 /RMD26 MD25 /RMD25 MD24 /RMD24
RP33 10_8P4R_0402 MD28 /RMD28 MD29 /RMD29 MD30 /RMD30 MD31 /RMD31
RP43 10_8P4R_0402 MD35 /RMD35 MD34 /RMD34 MD33 /RMD33 MD32 /RMD32
RP25 10_8P4R_0402 MD39 /RMD39 MD38 /RMD38 MD36 /RMD36 MD37 /RMD37
RP39 10_8P4R_0402 MD43 /RMD43 MD42 /RMD42 MD41 /RMD41 MD40 /RMD40
RP24 10_8P4R_0402 MD44 /RMD44 MD45 /RMD45 MD46 /RMD46 MD47 /RMD47
RP38 10_8P4R_0402 MD51 /RMD51 MD50 /RMD50 MD49 /RMD49 MD48 /RMD48
RP32 10_8P4R_0402 MD55 /RMD55 MD54 /RMD54 MD52 /RMD52 MD53 /RMD53
RP34 10_8P4R_0402 MD59 /RMD59 MD58 /RMD58 MD57 /RMD57 MD56 /RMD56
RP23 10_8P4R_0402 MD60 /RMD60 MD61 /RMD61 MD62 /RMD62 MD63 /RMD63
U10D
DDR SYSTEM MEMORY A
MD0 AG35 SADQ0
MD1 AH35 SADQ1
MD2 AL35 SADQ2
MD3 AL37 SADQ3
MD4 AH36 SADQ4
MD5 AJ35 SADQ5
MD6 AK37 SADQ6
MD7 AL34 SADQ7
MD8 AM36 SADQ8
MD9 AN35 SADQ9
MD10 AP32 SADQ10
MD11 AM31 SADQ11
MD12 AM34 SADQ12
MD13 AM35 SADQ13
MD14 AL32 SADQ14
MD15 AM32 SADQ15
MD16 AN31 SADQ16
MD17 AP31 SADQ17
MD18 AN28 SADQ18
MD19 AP28 SADQ19
MD20 AL30 SADQ20
MD21 AM30 SADQ21
MD22 AM28 SADQ22
MD23 AL28 SADQ23
MD24 AP27 SADQ24
MD25 AM27 SADQ25
MD26 AM23 SADQ26
MD27 AM22 SADQ27
MD28 AL23 SADQ28
MD29 AM24 SADQ29
MD30 AN22 SADQ30
MD31 AP22 SADQ31
MD32 AM9 SADQ32
MD33 AL9 SADQ33
MD34 AL6 SADQ34
MD35 AP7 SADQ35
MD36 AP11 SADQ36
MD37 AP10 SADQ37
MD38 AL7 SADQ38
MD39 AM7 SADQ39
MD40 AN5 SADQ40
MD41 AN6 SADQ41
MD42 AN3 SADQ42
MD43 AP3 SADQ43
MD44 AP6 SADQ44
MD45 AM6 SADQ45
MD46 AL4 SADQ46
MD47 AM3 SADQ47
MD48 AK2 SADQ48
MD49 AK3 SADQ49
MD50 AG2 SADQ50
MD51 AG1 SADQ51
MD52 AL3 SADQ52
MD53 AM2 SADQ53
MD54 AH3 SADQ54
MD55 AG3 SADQ55
MD56 AF3 SADQ56
MD57 AE3 SADQ57
MD58 AD6 SADQ58
MD59 AC4 SADQ59
MD60 AF2 SADQ60
MD61 AF1 SADQ61
MD62 AD4 SADQ62
MD63 AD5 SADQ63
Alviso_M
SA_BS2# DDR2 ONLY
SA_BS0# AK15 M_BS0 M_BS0 9,10
SA_BS1# AK16 M_BS1 M_BS1 9,10
SA_BS2# AL21 1 TP256
SA_DM0 AJ37 DQM0 R337 10_1%_0402 /RDQM0
SA_DM1 AP35 DQM1 R336 10_1%_0402 /RDQM1
SA_DM2 AL29 DQM2 R343 10_1%_0402 /RDQM2
SA_DM3 AP24 DQM3 R342 10_1%_0402 /RDQM3
SA_DM4 AP9 DQM4 R339 10_1%_0402 /RDQM4
SA_DM5 AP4 DQM5 R338 10_1%_0402 /RDQM5
SA_DM6 AJ2 DQM6 R335 10_1%_0402 /RDQM6
SA_DM7 AD3 DQM7 R334 10_1%_0402 /RDQM7
SA_DQS0 AK36 DQS0 R368 10_1%_0402 /RDQS0
SA_DQS1 AP33 DQS1 R369 10_1%_0402 /RDQS1
SA_DQS2 AN29 DQS2 R366 10_1%_0402 /RDQS2
SA_DQS3 AP23 DQS3 R367 10_1%_0402 /RDQS3
SA_DQS4 AM8 DQS4 R372 10_1%_0402 /RDQS4
SA_DQS5 AM4 DQS5 R370 10_1%_0402 /RDQS5
SA_DQS6 AJ1 DQS6 R371 10_1%_0402 /RDQS6
SA_DQS7 AE5 DQS7 R361 10_1%_0402 /RDQS7
SA_DQS0# AK35
SA_DQS1# AP34
SA_DQS2# AN30
SA_DQS3# AN23
SA_DQS4# AN8
SA_DQS5# AM5
SA_DQS6# AH1
SA_DQS7# AE4
SA_MA0 AL17 M_A0
SA_MA1 AP17 M_A1
SA_MA2 AP18 M_A2
SA_MA3 AM17 M_A3
SA_MA4 AN18 M_A4
SA_MA5 AM18 M_A5
SA_MA6 AL19 M_A6
SA_MA7 AP20 M_A7
SA_MA8 AM19 M_A8
SA_MA9 AL20 M_A9
SA_MA10 AM16 M_A10
SA_MA11 AN20 M_A11
SA_MA12 AM20 M_A12
SA_MA13 AM15 M_A13
M_A[0..13] M_A[0..13] 9,10
SA_DQS#[0..7] DDR2 ONLY
SA_MA13 IS FOR SUPPORT OF 1-Gb DEVICES.
SA_CAS# AN15 M_CAS- M_CAS- 9,10
SA_RAS# AP16 M_RAS- M_RAS- 9,10
SARCVENIN# AF29 ASARCVENIN- R772 0_NC
SA_RCVENOUT# AF28
SA_WE# AP15 M_WE- M_WE- 9,10
U10E
DDR SYSTEM MEMORY B
AE31 SBDQ0
AE32 SBDQ1
AG32 SBDQ2
AG36 SBDQ3
AE34 SBDQ4
AE33 SBDQ5
AF31 SBDQ6
AF30 SBDQ7
AH33 SBDQ8
AH32 SBDQ9
AK31 SBDQ10
AG30 SBDQ11
AG34 SBDQ12
AG33 SBDQ13
AH31 SBDQ14
AJ31 SBDQ15
AK30 SBDQ16
AJ30 SBDQ17
AH29 SBDQ18
AH28 SBDQ19
AK29 SBDQ20
AH30 SBDQ21
AH27 SBDQ22
AG28 SBDQ23
AF24 SBDQ24
AG23 SBDQ25
AJ22 SBDQ26
AK22 SBDQ27
AH24 SBDQ28
AH23 SBDQ29
AG22 SBDQ30
AJ21 SBDQ31
AG10 SBDQ32
AG9 SBDQ33
AG8 SBDQ34
AH8 SBDQ35
AH11 SBDQ36
AH10 SBDQ37
AJ9 SBDQ38
AK9 SBDQ39
AJ7 SBDQ40
AK6 SBDQ41
AJ4 SBDQ42
AH5 SBDQ43
AK8 SBDQ44
AJ8 SBDQ45
AJ5 SBDQ46
AK4 SBDQ47
AG5 SBDQ48
AG4 SBDQ49
AD8 SBDQ50
AD9 SBDQ51
AH4 SBDQ52
AG6 SBDQ53
AE8 SBDQ54
AD7 SBDQ55
AC5 SBDQ56
AB8 SBDQ57
AB6 SBDQ58
AA8 SBDQ59
AC8 SBDQ60
AC7 SBDQ61
AA4 SBDQ62
AA5 SBDQ63
Alviso_M
SB_BS0# AJ15 MB_BS0 MB_BS0 9,10
SB_BS1# AG17 MB_BS1 MB_BS1 9,10
SB_BS2# AG21 1 TP211
SB_DM0 AF32
SB_DM1 AK34
SB_DM2 AK27
SB_DM3 AK24
SB_DM4 AJ10
SB_DM5 AK5
SB_DM6 AE7
SB_DM7 AB7
SB_DQS0 AF34
SB_DQS1 AK32
SB_DQS2 AJ28
SB_DQS3 AK23
SB_DQS4 AM10
SB_DQS5 AH6
SB_DQS6 AF8
SB_DQS7 AB4
SB_DQS0# AF35
SB_DQS1# AK33
SB_DQS2# AK28
SB_DQS3# AJ23
SB_DQS4# AL10
SB_DQS5# AH7
SB_DQS6# AF7
SB_DQS7# AB5
0420C
M_B[0..13] 9,10
SB_MA0 AH17 M_B0
SB_MA1 AK17 M_B1
SB_MA2 AH18 M_B2
SB_MA3 AJ18 M_B3
SB_MA4 AK18 M_B4
SB_MA5 AJ19 M_B5
SB_MA6 AK19 M_B6
SB_MA7 AH19 M_B7
SB_MA8 AJ20 M_B8
SB_MA9 AH20 M_B9
SB_MA10 AJ16 M_B10
SB_MA11 AG18 M_B11
SB_MA12 AG20 M_B12
SB_MA13 AG15 M_B13
SB_CAS# AH14 MB_CAS- MB_CAS- 9,10
SB_RAS# AK14 MB_RAS- MB_RAS- 9,10
SBRCVENIN# AF15 BSARCVENIN- R766 0_NC
SB_RCVENOUT# AF14
SB_WE# AH16 MB_WE- MB_WE- 9,10
5 4 3 2 1
D C B A

Title
G600 Alviso_M-3

Size B
Document Number G600-1-4-01
Rev 1.0

Date: Friday, September 02, 2005
Sheet 7 of 44

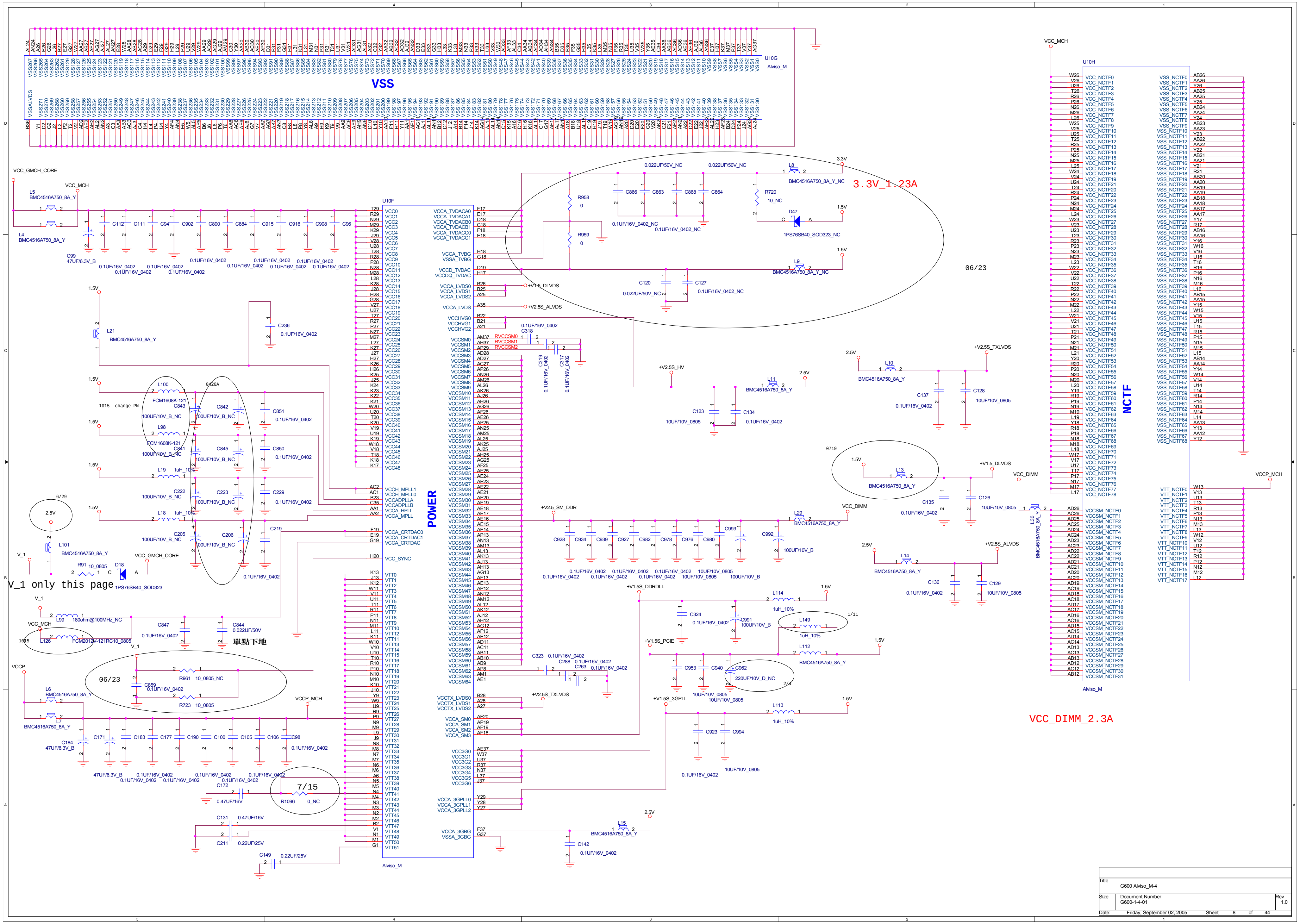
VSS
U10G
Alviso_M
U10H
NCTF
U10F
POWER
VCC_MCH
VCC_GMCH_CORE
VCC_DIMM
VCCP_MCH
VCCP
V_1
1.5V
2.5V
3.3V
3.3V_1.23A
VCC_DIMM_2.3A
06/23
0719
0420A
1015 change PN
6/29
7/15
1/11
V_1 only this page
單點下地
+V1.5_DLVDS
+V2.5S_ALVDS
+V2.5S_TXLVDS
+V2.5S_HV
+V1.5_DLVDS
+V2.5_SM_DDR
+V1.5S_DDRDLL
+V1.5S_PCIE
+V1.5S_3GPLL
+V2.5S_ALVDS
L4 BMC4516A750_8A_Y
L5 BMC4516A750_8A_Y
L6 BMC4516A750_8A_Y
L7 BMC4516A750_8A_Y
L8 BMC4516A750_8A_Y_NC
L9 BMC4516A750_8A_Y_NC
L10 BMC4516A750_8A_Y
L11 BMC4516A750_8A_Y
L13 BMC4516A750_8A_Y
L14 BMC4516A750_8A_Y
L15 BMC4516A750_8A_Y
L21 BMC4516A750_8A_Y
L29 BMC4516A750_8A_Y
L30 BMC4516A750_8A_Y
L101 BMC4516A750_8A_Y
L112 BMC4516A750_8A_Y
L100 FCM1608K-121
L98 FCM1608K-121
L99 180ohm@100MHz_NC
L126 FCM2012V-121RC10_0805
L18 1uH_10%
L19 1uH_10%
L113 1uH_10%
L114 1uH_10%
L149 1uH_10%
R958 0
R959 0
R720 10_NC
R91 10_0805
R961 10_0805_NC
R723 10_0805
R1096 0_NC
D47 1PS76SB40_SOD323_NC
D18 1PS76SB40_SOD323
C99 47UF/6.3V_B
C184 47UF/6.3V_B
C962 220UF/10V_D_NC
C844 0.022UF/50V
0.022UF/50V_NC
0.1UF/16V_0402
0.1UF/16V_0402_NC
100UF/10V_B
100UF/10V_B_NC
10UF/10V_0805
0.47UF/16V
0.22UF/25V
RVCCSM0
RVCCSM1
RVCCSM2

Title
G600 Alviso_M-4

Size Document Number
G600-1-4-01

Rev
1.0

Date: Friday, September 02, 2005 Sheet 8 of 44

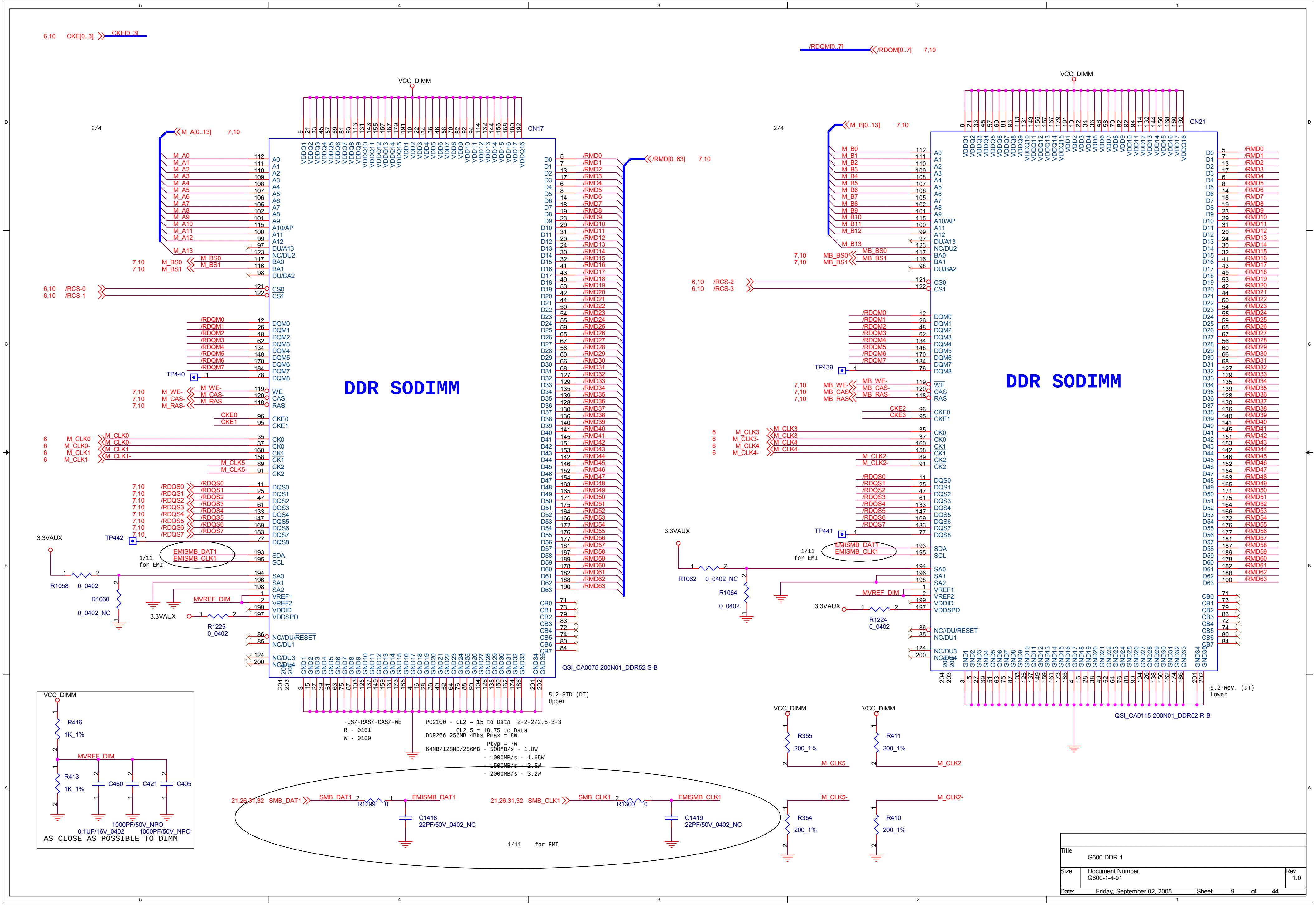
CKE[0..3]
6,10
/RDQM[0..7]
7,10
VCC_DIMM
CN17
CN21
M_A[0..13]
M_B[0..13]
/RMD[0..63]
2/4
DDR SODIMM
DDR SODIMM
A0
A1
A2
A3
A4
A5
A6
A7
A8
A9
A10/AP
A11
A12
DU/A13
NC/DU2
BA0
BA1
DU/BA2
CS0
CS1
DQM0
DQM8
WE
CAS
RAS
CKE0
CKE1
CK0
CK1
CK2
DQS0
DQS8
SDA
SCL
SA0
SA1
SA2
VREF1
VREF2
VDDID
VDDSPD
NC/DU/RESET
NC/DU1
NC/DU3
NC/DU4
CB0
CB7
M_BS0
M_BS1
MB_BS0
MB_BS1
/RCS-0
/RCS-1
/RCS-2
/RCS-3
M_WE-
M_CAS-
M_RAS-
MB_WE-
MB_CAS-
MB_RAS-
M_CLK0
M_CLK0-
M_CLK1
M_CLK1-
M_CLK2
M_CLK2-
M_CLK3
M_CLK3-
M_CLK4
M_CLK4-
M_CLK5
M_CLK5-
/RDQS0
/RDQS7
EMISMB_DAT1
EMISMB_CLK1
TP440
TP442
TP439
TP441
3.3VAUX
MVREF_DIM
R1058 0_0402
R1060 0_0402_NC
R1225 0_0402
R1062 0_0402_NC
R1064 0_0402
R1224 0_0402
QSI_CA0075-200N01_DDR52-S-B
QSI_CA0115-200N01_DDR52-R-B
R416 1K_1%
R413 1K_1%
C460 0.1UF/16V_0402
C421 1000PF/50V_NPO
C405 1000PF/50V_NPO
21,26,31,32 SMB_DAT1
21,26,31,32 SMB_CLK1
R1299 0
R1300 0
C1418 22PF/50V_0402_NC
C1419 22PF/50V_0402_NC
R355 200_1%
R411 200_1%
R354 200_1%
R410 200_1%

-CS/-RAS/-CAS/-WE
R - 0101
W - 0100

PC2100 - CL2 = 15 to Data 2-2-2/2.5-3-3
CL2.5 = 18.75 to Data
DDR266 256MB 4Bks Pmax = 8W
Ptyp = 7W
64MB/128MB/256MB - 500MB/s - 1.0W
- 1000MB/s - 1.65W
- 1500MB/s - 2.5W
- 2000MB/s - 3.2W

5.2-STD (DT)
Upper

5.2-Rev. (DT)
Lower

1/11 for EMI

AS CLOSE AS POSSIBLE TO DIMM

Title
G600 DDR-1
Size
Document Number
G600-1-4-01
Rev
1.0
Date: Friday, September 02, 2005 Sheet 9 of 44

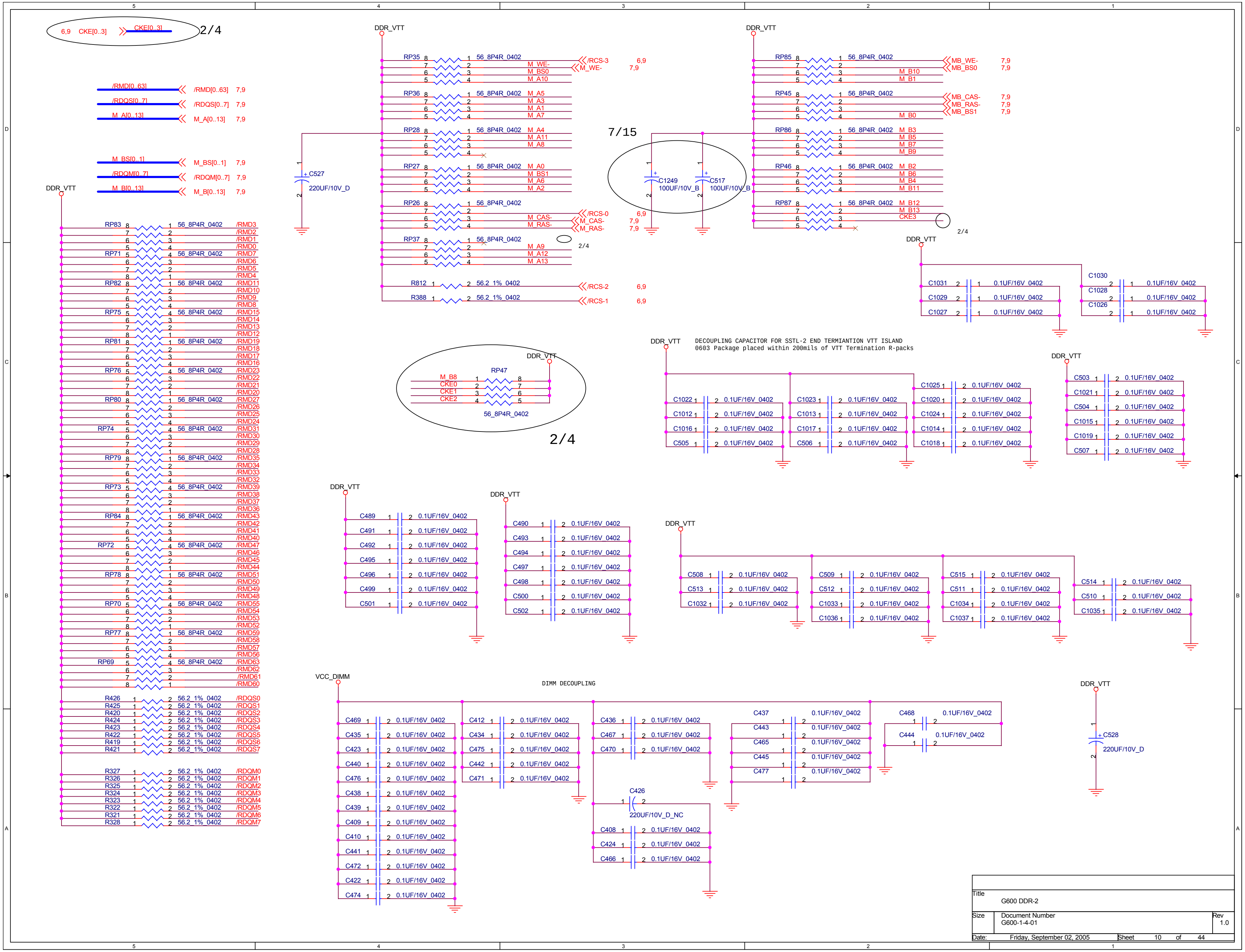
6,9 CKE[0..3]
CKE[0..3]
2/4
/RMD[0..63] /RMD[0..63] 7,9
/RDQS[0..7] /RDQS[0..7] 7,9
M_A[0..13] M_A[0..13] 7,9
M_BS[0..1] M_BS[0..1] 7,9
/RDQM[0..7] /RDQM[0..7] 7,9
M_B[0..13] M_B[0..13] 7,9
DDR_VTT
RP83 56_8P4R_0402 /RMD3 /RMD2 /RMD1 /RMD0
RP71 56_8P4R_0402 /RMD7 /RMD6 /RMD5 /RMD4
RP82 56_8P4R_0402 /RMD11 /RMD10 /RMD9 /RMD8
RP75 56_8P4R_0402 /RMD15 /RMD14 /RMD13 /RMD12
RP81 56_8P4R_0402 /RMD19 /RMD18 /RMD17 /RMD16
RP76 56_8P4R_0402 /RMD23 /RMD22 /RMD21 /RMD20
RP80 56_8P4R_0402 /RMD27 /RMD26 /RMD25 /RMD24
RP74 56_8P4R_0402 /RMD31 /RMD30 /RMD29 /RMD28
RP79 56_8P4R_0402 /RMD35 /RMD34 /RMD33 /RMD32
RP73 56_8P4R_0402 /RMD39 /RMD38 /RMD37 /RMD36
RP84 56_8P4R_0402 /RMD43 /RMD42 /RMD41 /RMD40
RP72 56_8P4R_0402 /RMD47 /RMD46 /RMD45 /RMD44
RP78 56_8P4R_0402 /RMD51 /RMD50 /RMD49 /RMD48
RP70 56_8P4R_0402 /RMD55 /RMD54 /RMD53 /RMD52
RP77 56_8P4R_0402 /RMD59 /RMD58 /RMD57 /RMD56
RP69 56_8P4R_0402 /RMD63 /RMD62 /RMD61 /RMD60
R426 56.2_1%_0402 /RDQS0
R425 56.2_1%_0402 /RDQS1
R420 56.2_1%_0402 /RDQS2
R424 56.2_1%_0402 /RDQS3
R423 56.2_1%_0402 /RDQS4
R422 56.2_1%_0402 /RDQS5
R419 56.2_1%_0402 /RDQS6
R421 56.2_1%_0402 /RDQS7
R327 56.2_1%_0402 /RDQM0
R326 56.2_1%_0402 /RDQM1
R325 56.2_1%_0402 /RDQM2
R324 56.2_1%_0402 /RDQM3
R323 56.2_1%_0402 /RDQM4
R322 56.2_1%_0402 /RDQM5
R321 56.2_1%_0402 /RDQM6
R328 56.2_1%_0402 /RDQM7
C527 220UF/10V_D
RP35 56_8P4R_0402 /RCS-3 6,9 M_WE- M_BS0 M_A10 7,9
RP36 56_8P4R_0402 M_A5 M_A3 M_A1 M_A7
RP28 56_8P4R_0402 M_A4 M_A11 M_A8
RP27 56_8P4R_0402 M_A0 M_BS1 M_A6 M_A2
RP26 56_8P4R_0402 /RCS-0 6,9 M_CAS- M_RAS- 7,9 7,9
RP37 56_8P4R_0402 M_A9 M_A12 M_A13 2/4
R812 56.2_1%_0402 /RCS-2 6,9
R388 56.2_1%_0402 /RCS-1 6,9
7/15
C1249 100UF/10V_B
C517 100UF/10V_B
RP85 56_8P4R_0402 MB_WE- MB_BS0 7,9 7,9 M_B10 M_B1
RP45 56_8P4R_0402 MB_CAS- MB_RAS- MB_BS1 7,9 7,9 7,9 M_B0
RP86 56_8P4R_0402 M_B3 M_B5 M_B7 M_B9
RP46 56_8P4R_0402 M_B2 M_B6 M_B4 M_B11
RP87 56_8P4R_0402 M_B12 M_B13 CKE3
2/4
C1031 0.1UF/16V_0402 C1029 0.1UF/16V_0402 C1027 0.1UF/16V_0402
C1030 0.1UF/16V_0402 C1028 0.1UF/16V_0402 C1026 0.1UF/16V_0402
RP47 M_B8 CKE0 CKE1 CKE2 56_8P4R_0402
2/4
DECOUPLING CAPACITOR FOR SSTL-2 END TERMIANTION VTT ISLAND
0603 Package placed within 200mils of VTT Termination R-packs
C1022 C1012 C1016 C505 0.1UF/16V_0402
C1023 C1013 C1017 C506 0.1UF/16V_0402
C1025 C1020 C1024 C1014 C1018 0.1UF/16V_0402
C503 C1021 C504 C1015 C1019 C507 0.1UF/16V_0402
C489 C491 C492 C495 C496 C499 C501 0.1UF/16V_0402
C490 C493 C494 C497 C498 C500 C502 0.1UF/16V_0402
C508 C513 C1032 0.1UF/16V_0402
C509 C512 C1033 C1036 0.1UF/16V_0402
C515 C511 C1034 C1037 0.1UF/16V_0402
C514 C510 C1035 0.1UF/16V_0402
VCC_DIMM
DIMM DECOUPLING
C469 C435 C423 C440 C476 C438 C439 C409 C410 C441 C472 C422 C474 0.1UF/16V_0402
C412 C434 C475 C442 C471 0.1UF/16V_0402
C436 C467 C470 0.1UF/16V_0402
C426 220UF/10V_D_NC
C408 C424 C466 0.1UF/16V_0402
C437 C443 C465 C445 C477 0.1UF/16V_0402
C468 C444 0.1UF/16V_0402
C528 220UF/10V_D
5 4 3 2 1
D C B A

Title
G600 DDR-2

Size | Document Number | Rev
G600-1-4-01 | 1.0

Date: Friday, September 02, 2005 Sheet 10 of 44

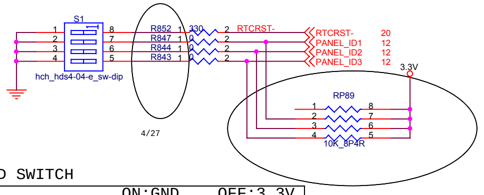
S1
hch_hds4-04-e_sw-dip
R852
R847
R843
R844
330
RTCRST-
RTCRST- 20
PANEL_ID1 12
PANEL_ID2 12
PANEL_ID3 12
3.3V
RP89
10K_8P4R
4/27

PANEL ID SWITCH

				ON:GND OFF:3.3V
	ID1	ID2	ID3	PANEL TYPE 1280*800
0	ON	ON	ON	
1	OFF	ON	ON	
2	ON	OFF	ON	AU
3	OFF	OFF	ON	CPT
4	ON	ON	OFF	
5	OFF	ON	OFF	
6	ON	OFF	OFF	
7	OFF	OFF	OFF	Default,LG,TORISAN

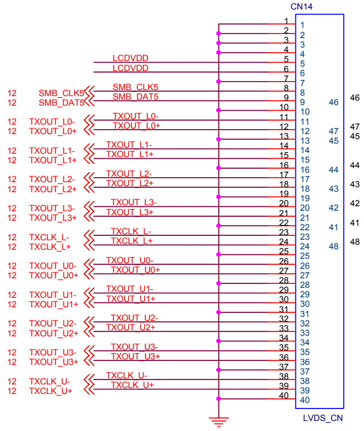
CN14
LVDS_CN
LCDVDD
LCDVDD
12 SMB_CLK5
12 SMB_DAT5
12 TXOUT_L0-
12 TXOUT_L0+
12 TXOUT_L1-
12 TXOUT_L1+
12 TXOUT_L2-
12 TXOUT_L2+
12 TXOUT_L3-
12 TXOUT_L3+
12 TXCLK_L-
12 TXCLK_L+
12 TXOUT_U0-
12 TXOUT_U0+
12 TXOUT_U1-
12 TXOUT_U1+
12 TXOUT_U2-
12 TXOUT_U2+
12 TXOUT_U3-
12 TXOUT_U3+
12 TXCLK_U-
12 TXCLK_U+

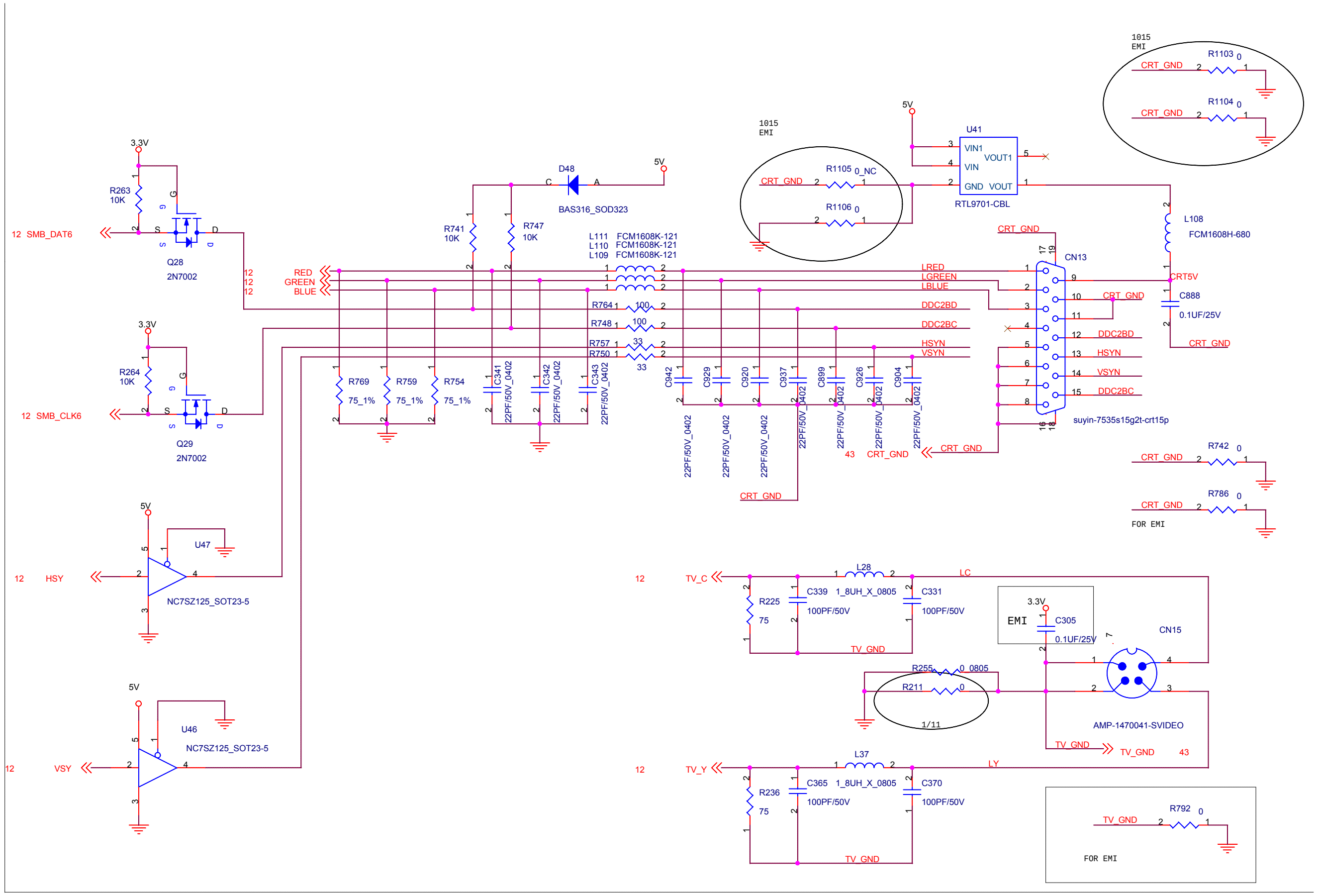
3.3V
R263 10K
12 SMB_DAT6
Q28 2N7002
3.3V
R264 10K
12 SMB_CLK6
Q29 2N7002
5V
U47
12 HSY
NC7SZ125_SOT23-5
5V
U46
NC7SZ125_SOT23-5
12 VSY
D48
BAS316_SOD323
5V
R741 10K
R747 10K
12 RED
12 GREEN
12 BLUE
L111 FCM1608K-121
L110 FCM1608K-121
L109 FCM1608K-121
R764 100
R748 100
R757 33
R750 33
R769 75_1%
R759 75_1%
R754 75_1%
C341 22PF/50V_0402
C342 22PF/50V_0402
C343 22PF/50V_0402
C942 C929 C920 C937 C899 C926 C904
22PF/50V_0402
CRT_GND
43 CRT_GND
1015 EMI
R1105 0_NC
R1106 0
5V
U41
VIN1 VOUT1
VIN
GND VOUT
RTL9701-CBL
L108
FCM1608H-680
CRT5V
C888 0.1UF/25V
CN13
suyin-7535s15g2t-crt15p
LRED
LGREEN
LBLUE
DDC2BD
DDC2BC
HSYN
VSYN
1015 EMI
R1103 0
R1104 0
R742 0
R786 0
FOR EMI
12 TV_C
L28
C339 1_8UH_X_0805
100PF/50V
C331 100PF/50V
R225 75
LC
TV_GND
3.3V
EMI C305 0.1UF/25V
CN15
AMP-1470041-SVIDEO
R255 0_0805
R211 0
1/11
TV_GND 43
12 TV_Y
L37
C365 1_8UH_X_0805
100PF/50V
C370 100PF/50V
R236 75
LY
R792 0
FOR EMI

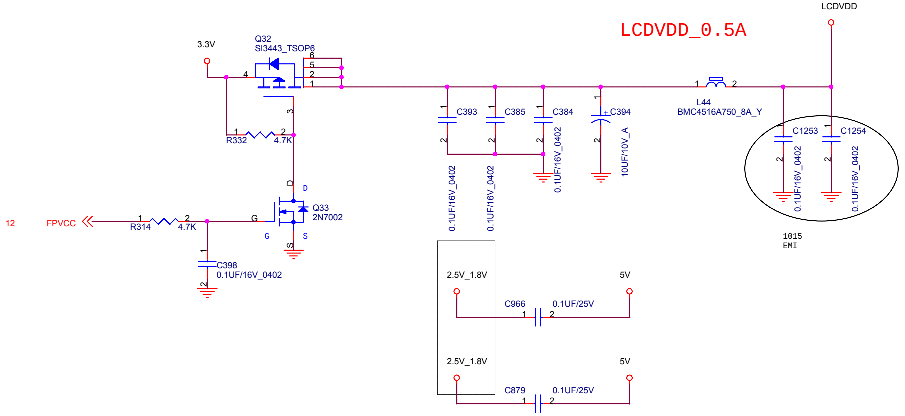
LCDVDD_0.5A
LCDVDD
3.3V
Q32
SI3443_TSOP6
R332 4.7K
12 FPVCC
R314 4.7K
Q33 2N7002
C398 0.1UF/16V_0402
C393 C385 C384 C394
0.1UF/16V_0402
10UF/10V_A
L44
BMC4516A750_8A_Y
C1253 C1254
0.1UF/16V_0402
1015 EMI
2.5V_1.8V
5V
C966 0.1UF/25V
2.5V_1.8V
5V
C879 0.1UF/25V

7/13 FOR M26 1.8V

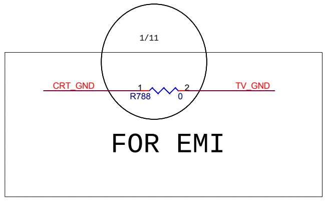
1/11
CRT_GND
R788 0
TV_GND
FOR EMI

Title		
G600 LVDS / CRT /TV		
Size C	Document Number G600-1-4-01	Rev 1.A
Date: Friday, September 02, 2005	Sheet 11 of 44	

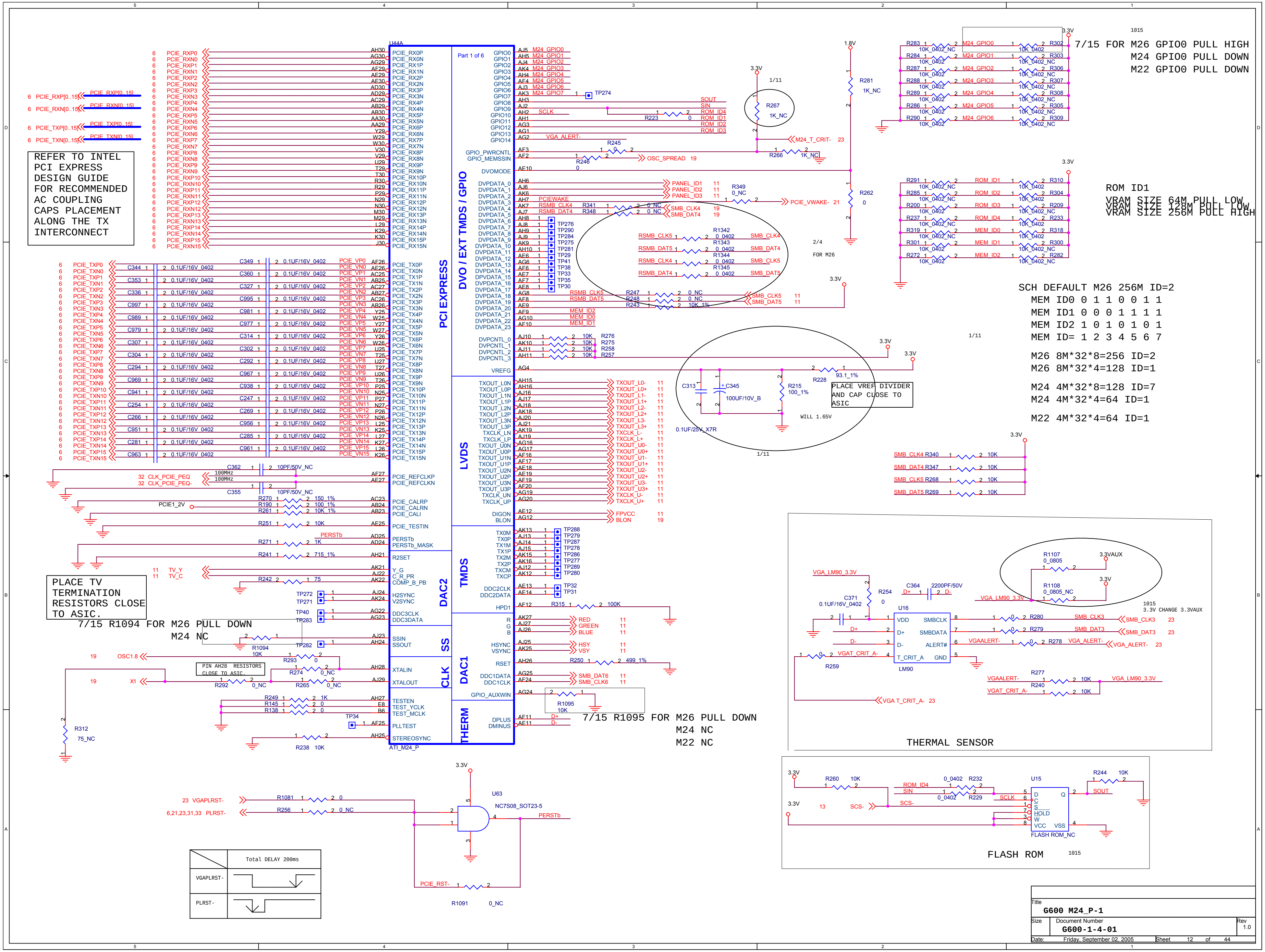
U44A
PCI EXPRESS
DVO / EXT TMDS / GPIO
Part 1 of 6
LVDS
TMDS
DAC2
SS
CLK
DAC1
THERM
ATI_M24_P
PCIE_RXP[0..15]
PCIE_RXN[0..15]
PCIE_TXP[0..15]
PCIE_TXN[0..15]
0.1UF/16V_0402
CLK_PCIE_PEQ
CLK_PCIE_PEQ-
100MHz
10PF/50V_NC
PCIE1_2V
PCIE_CALRP
PCIE_CALRN
PCIE_CALI
PCIE_TESTIN
PERSTb
PERSTb_MASK
R2SET
Y_G
C_R_PR
COMP_B_PB
TV_Y
TV_C
H2SYNC
V2SYNC
DDC3CLK
DDC3DATA
SSIN
SSOUT
XTALIN
XTALOUT
OSC1.8
X1
PIN AH28 RESISTORS CLOSE TO ASIC.
TESTEN
TEST_YCLK
TEST_MCLK
PLLTEST
STEREOSYNC
R312 75_NC
M24_GPIO0 … M24_GPIO7
SOUT
SIN
SCLK
ROM_ID4
ROM_ID1
ROM_ID2
ROM_ID3
VGA_ALERT-
GPIO_PWRCNTL
GPIO_MEMSSIN
OSC_SPREAD
DVOMODE
PANEL_ID1
PANEL_ID2
PANEL_ID3
PCIEWAKE
PCIE_VWAKE-
RSMB_CLK4
RSMB_DAT4
SMB_CLK4
SMB_DAT4
RSMB_CLK5
RSMB_DAT5
SMB_CLK5
SMB_DAT5
FOR M26
MEM_ID0
MEM_ID1
MEM_ID2
VREFG
93.1_1%
100_1%
100UF/10V_B
0.1UF/25V_X7R
WILL 1.65V
TXOUT_L0- … TXOUT_U3+
TXCLK_L-
TXCLK_L+
TXCLK_U-
TXCLK_U+
FPVCC
BLON
RED
GREEN
BLUE
HSY
VSY
SMB_DAT6
SMB_CLK6
D+
D-
M24_CRIT-
VGA_LM90_3.3V
3.3VAUX
U16
LM90
VDD
SMBCLK
SMBDATA
ALERT#
T_CRIT_A
GND
2200PF/50V
0.1UF/16V_0402
VGA_T_CRIT_A-
3.3V CHANGE 3.3VAUX
U15
FLASH ROM_NC
HOLD
VCC
VSS
SCS-
U63
NC7S08_SOT23-5
VGAPLRST-
PLRST-
PCIE_RST-
R1091 0_NC
1.8V
3.3V
1015
1/11
2/4

REFER TO INTEL
PCI EXPRESS
DESIGN GUIDE
FOR RECOMMENDED
AC COUPLING
CAPS PLACEMENT
ALONG THE TX
INTERCONNECT

PLACE TV
TERMINATION
RESISTORS CLOSE
TO ASIC.

7/15 R1094 FOR M26 PULL DOWN
M24 NC

7/15 FOR M26 GPIO0 PULL HIGH
M24 GPIO0 PULL DOWN
M22 GPIO0 PULL DOWN

ROM ID1
VRAM SIZE 64M PULL LOW
VRAM SIZE 128M PULL LOW
VRAM SIZE 256M PULL HIGH

SCH DEFAULT M26 256M ID=2

MEM ID0	0	1	1	0	0	1	1
MEM ID1	0	0	0	1	1	1	1
MEM ID2	1	0	1	0	1	0	1
MEM ID=	1	2	3	4	5	6	7

M26 8M*32*8=256 ID=2
M26 8M*32*4=128 ID=1

M24 4M*32*8=128 ID=7
M24 4M*32*4=64 ID=1

M22 4M*32*4=64 ID=1

PLACE VREF DIVIDER
AND CAP CLOSE TO
ASIC

7/15 R1095 FOR M26 PULL DOWN
M24 NC
M22 NC

THERMAL SENSOR

FLASH ROM

	Total DELAY 200ms
VGAPLRST-	
PLRST-	

Title
G600 M24_P-1
Size Document Number
G600-1-4-01
Rev 1.0
Date: Friday, September 02, 2005 Sheet 12 of 44

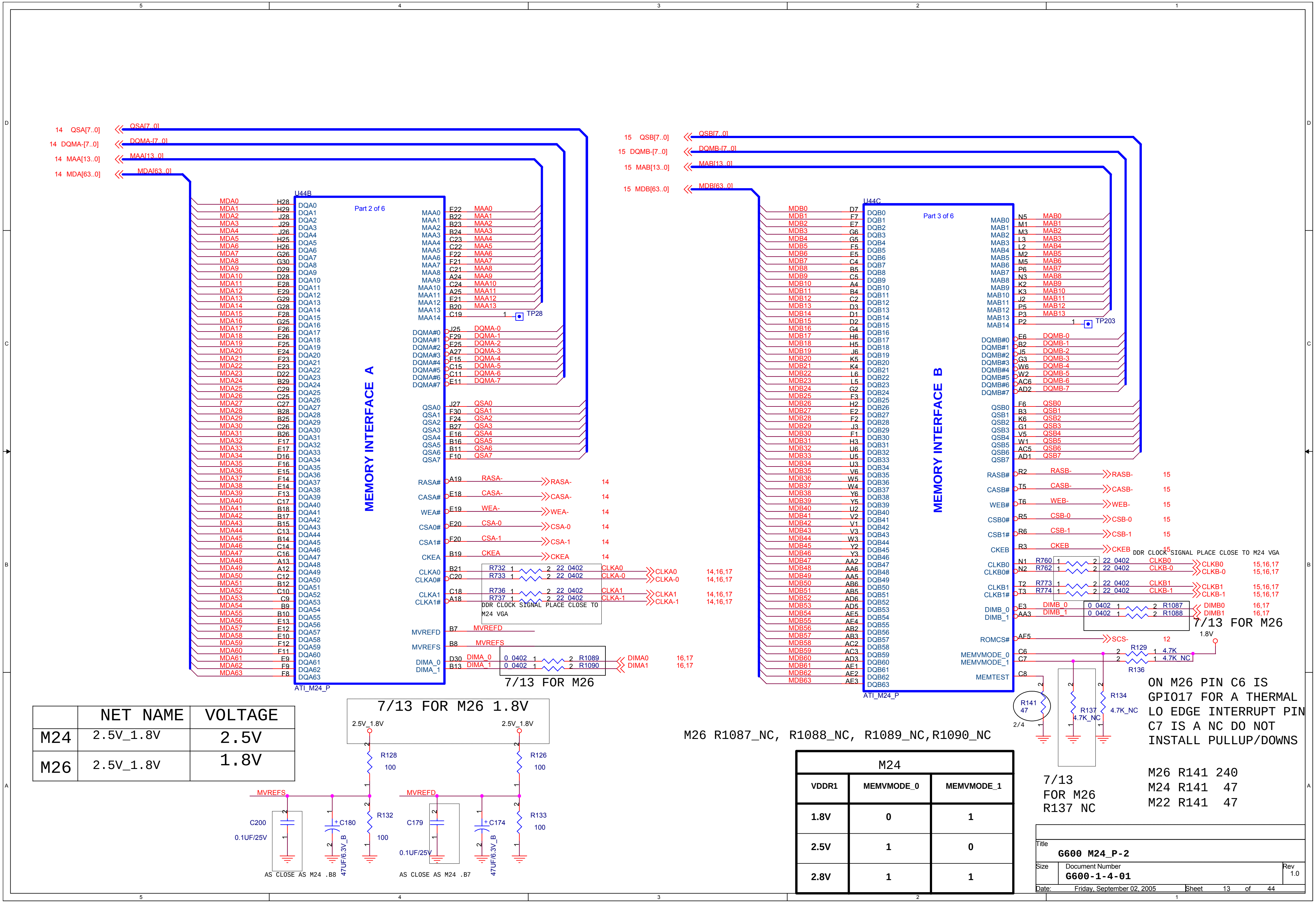
14 QSA[7..0]
14 DQMA-[7..0]
14 MAA[13..0]
14 MDA[63..0]
QSA[7..0]
DQMA-[7..0]
MAA[13..0]
MDA[63..0]
U44B
Part 2 of 6
MEMORY INTERFACE A
ATI_M24_P
MDA0 H28 DQA0
MDA1 H29 DQA1
MDA2 J28 DQA2
MDA3 J29 DQA3
MDA4 J26 DQA4
MDA5 H25 DQA5
MDA6 H26 DQA6
MDA7 G26 DQA7
MDA8 G30 DQA8
MDA9 D29 DQA9
MDA10 D28 DQA10
MDA11 E28 DQA11
MDA12 E29 DQA12
MDA13 G29 DQA13
MDA14 G28 DQA14
MDA15 F28 DQA15
MDA16 G25 DQA16
MDA17 F26 DQA17
MDA18 E26 DQA18
MDA19 F25 DQA19
MDA20 F24 DQA20
MDA21 F23 DQA21
MDA22 E23 DQA22
MDA23 D22 DQA23
MDA24 B29 DQA24
MDA25 C29 DQA25
MDA26 C25 DQA26
MDA27 C27 DQA27
MDA28 B28 DQA28
MDA29 B25 DQA29
MDA30 C26 DQA30
MDA31 B26 DQA31
MDA32 F17 DQA32
MDA33 E17 DQA33
MDA34 D16 DQA34
MDA35 F16 DQA35
MDA36 E15 DQA36
MDA37 F14 DQA37
MDA38 E14 DQA38
MDA39 F13 DQA39
MDA40 C17 DQA40
MDA41 B18 DQA41
MDA42 B17 DQA42
MDA43 B15 DQA43
MDA44 C13 DQA44
MDA45 B14 DQA45
MDA46 C14 DQA46
MDA47 C16 DQA47
MDA48 A13 DQA48
MDA49 A12 DQA49
MDA50 C12 DQA50
MDA51 B12 DQA51
MDA52 C10 DQA52
MDA53 C9 DQA53
MDA54 B9 DQA54
MDA55 B10 DQA55
MDA56 E13 DQA56
MDA57 E12 DQA57
MDA58 F10 DQA58
MDA59 F12 DQA59
MDA60 F11 DQA60
MDA61 E9 DQA61
MDA62 F9 DQA62
MDA63 F8 DQA63
MAA0 E22 MAA0
MAA1 B22 MAA1
MAA2 B23 MAA2
MAA3 B24 MAA3
MAA4 C23 MAA4
MAA5 C22 MAA5
MAA6 F22 MAA6
MAA7 F21 MAA7
MAA8 C21 MAA8
MAA9 A24 MAA9
MAA10 C24 MAA10
MAA11 A25 MAA11
MAA12 E21 MAA12
MAA13 B20 MAA13
MAA14 C19 1 TP28
DQMA#0 J25 DQMA-0
DQMA#1 F29 DQMA-1
DQMA#2 E25 DQMA-2
DQMA#3 A27 DQMA-3
DQMA#4 F15 DQMA-4
DQMA#5 C15 DQMA-5
DQMA#6 C11 DQMA-6
DQMA#7 E11 DQMA-7
QSA0 J27 QSA0
QSA1 F30 QSA1
QSA2 F24 QSA2
QSA3 B27 QSA3
QSA4 E16 QSA4
QSA5 B16 QSA5
QSA6 B11 QSA6
QSA7 F10 QSA7
RASA# A19 RASA- RASA- 14
CASA# E18 CASA- CASA- 14
WEA# E19 WEA- WEA- 14
CSA0# E20 CSA-0 CSA-0 14
CSA1# F20 CSA-1 CSA-1 14
CKEA B19 CKEA CKEA 14
CLKA0 B21 R732 1 2 22_0402 CLKA0 CLKA0 14,16,17
CLKA0# C20 R733 1 2 22_0402 CLKA-0 CLKA-0 14,16,17
CLKA1 C18 R736 1 2 22_0402 CLKA1 CLKA1 14,16,17
CLKA1# A18 R737 1 2 22_0402 CLKA-1 CLKA-1 14,16,17
DDR CLOCK SIGNAL PLACE CLOSE TO M24 VGA
MVREFD B7 MVREFD
MVREFS B8 MVREFS
DIMA_0 D30 DIMA_0 0_0402 1 2 R1089 DIMA0 16,17
DIMA_1 B13 DIMA_1 0_0402 1 2 R1090 DIMA1 16,17
7/13 FOR M26
15 QSB[7..0]
15 DQMB-[7..0]
15 MAB[13..0]
15 MDB[63..0]
QSB[7..0]
DQMB-[7..0]
MAB[13..0]
MDB[63..0]
U44C
Part 3 of 6
MEMORY INTERFACE B
ATI_M24_P
MDB0 D7 DQB0
MDB1 F7 DQB1
MDB2 E7 DQB2
MDB3 G6 DQB3
MDB4 G5 DQB4
MDB5 F5 DQB5
MDB6 E5 DQB6
MDB7 C4 DQB7
MDB8 B5 DQB8
MDB9 C5 DQB9
MDB10 A4 DQB10
MDB11 B4 DQB11
MDB12 C2 DQB12
MDB13 D3 DQB13
MDB14 D1 DQB14
MDB15 D2 DQB15
MDB16 G4 DQB16
MDB17 H6 DQB17
MDB18 H5 DQB18
MDB19 J6 DQB19
MDB20 K5 DQB20
MDB21 K4 DQB21
MDB22 L6 DQB22
MDB23 L5 DQB23
MDB24 G2 DQB24
MDB25 H2 DQB25
MDB26 F3 DQB26
MDB27 E2 DQB27
MDB28 F2 DQB28
MDB29 J3 DQB29
MDB30 F1 DQB30
MDB31 H3 DQB31
MDB32 U6 DQB32
MDB33 U5 DQB33
MDB34 U3 DQB34
MDB35 V6 DQB35
MDB36 W5 DQB36
MDB37 W4 DQB37
MDB38 Y6 DQB38
MDB39 Y5 DQB39
MDB40 U2 DQB40
MDB41 V2 DQB41
MDB42 V1 DQB42
MDB43 V3 DQB43
MDB44 W3 DQB44
MDB45 Y2 DQB45
MDB46 Y3 DQB46
MDB47 AA2 DQB47
MDB48 AA6 DQB48
MDB49 AA5 DQB49
MDB50 AB6 DQB50
MDB51 AB5 DQB51
MDB52 AD6 DQB52
MDB53 AD5 DQB53
MDB54 AE5 DQB54
MDB55 AE4 DQB55
MDB56 AB2 DQB56
MDB57 AB3 DQB57
MDB58 AC2 DQB58
MDB59 AC3 DQB59
MDB60 AD3 DQB60
MDB61 AE1 DQB61
MDB62 AE2 DQB62
MDB63 AE3 DQB63
MAB0 N5 MAB0
MAB1 M1 MAB1
MAB2 M3 MAB2
MAB3 L3 MAB3
MAB4 L2 MAB4
MAB5 M2 MAB5
MAB6 M5 MAB6
MAB7 P6 MAB7
MAB8 N3 MAB8
MAB9 K2 MAB9
MAB10 K3 MAB10
MAB11 J2 MAB11
MAB12 P5 MAB12
MAB13 P3 MAB13
MAB14 P2 1 TP203
DQMB#0 E6 DQMB-0
DQMB#1 B2 DQMB-1
DQMB#2 J5 DQMB-2
DQMB#3 G3 DQMB-3
DQMB#4 W6 DQMB-4
DQMB#5 W2 DQMB-5
DQMB#6 AC6 DQMB-6
DQMB#7 AD2 DQMB-7
QSB0 F6 QSB0
QSB1 B3 QSB1
QSB2 K6 QSB2
QSB3 G1 QSB3
QSB4 V5 QSB4
QSB5 W1 QSB5
QSB6 AC5 QSB6
QSB7 AD1 QSB7
RASB# R2 RASB- RASB- 15
CASB# T5 CASB- CASB- 15
WEB# T6 WEB- WEB- 15
CSB0# R5 CSB-0 CSB-0 15
CSB1# R6 CSB-1 CSB-1 15
CKEB R3 CKEB CKEB 15
DDR CLOCK SIGNAL PLACE CLOSE TO M24 VGA
CLKB0 N1 R760 1 2 22_0402 CLKB0 CLKB0 15,16,17
CLKB0# N2 R762 1 2 22_0402 CLKB-0 CLKB-0 15,16,17
CLKB1 T2 R773 1 2 22_0402 CLKB1 CLKB1 15,16,17
CLKB1# T3 R774 1 2 22_0402 CLKB-1 CLKB-1 15,16,17
DIMB_0 E3 DIMB_0 0_0402 1 2 R1087 DIMB0 16,17
DIMB_1 AA3 DIMB_1 0_0402 1 2 R1088 DIMB1 16,17
7/13 FOR M26
ROMCS# AF5 SCS- 12
MEMVMODE_0 C6
MEMVMODE_1 C7
MEMTEST C8
1.8V
R129 2 1 4.7K
2 1 4.7K_NC
R136
R141 47
2/4
R137 4.7K_NC
R134 4.7K_NC
7/13 FOR M26 1.8V
2.5V_1.8V
2.5V_1.8V
R128 100
R126 100
MVREFS
MVREFD
R132 100
R133 100
C200 0.1UF/25V
C180 47UF/6.3V_B
C179 0.1UF/25V
C174 47UF/6.3V_B
AS CLOSE AS M24 .B8
AS CLOSE AS M24 .B7
5 4 3 2 1
D C B A

	NET NAME	VOLTAGE
M24	2.5V_1.8V	2.5V
M26	2.5V_1.8V	1.8V

M26 R1087_NC, R1088_NC, R1089_NC,R1090_NC

M24		
VDDR1	MEMVMODE_0	MEMVMODE_1
1.8V	0	1
2.5V	1	0
2.8V	1	1

ON M26 PIN C6 IS
GPIO17 FOR A THERMAL
LO EDGE INTERRUPT PIN
C7 IS A NC DO NOT
INSTALL PULLUP/DOWNS

7/13
FOR M26
R137 NC

M26 R141 240
M24 R141 47
M22 R141 47

Title
G600 M24_P-2

Size
Document Number
G600-1-4-01

Rev
1.0

Date: Friday, September 02, 2005
Sheet 13 of 44

TERMINATION FOR MEMORY CHANNEL A

PARALLEL TERMINATION RESISTORS AND DECOUPLING

SSTL_2 CLASS I

PLACE AT NETS MID POINT

PARALLEL TERMINATION COULD BE
OMITTED UNDER SOME CIRCUMSTANCE.
PLEASE CONSULT WITH ATI FOR
DETAIL.

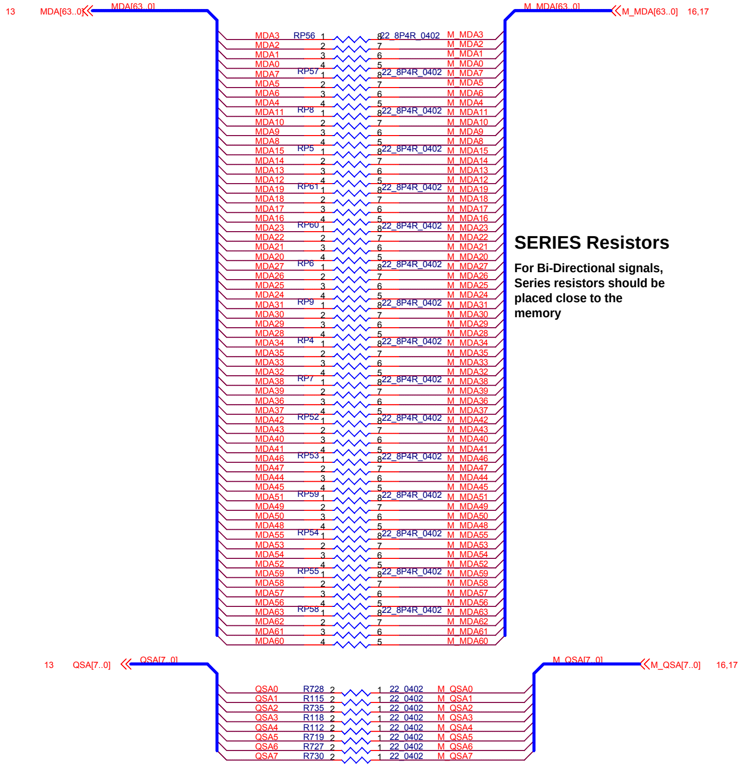
13 MDA[63..0]
MDA[63..0]
M_MDA[63..0]
M_MDA[63..0] 16,17
MDA3 RP56 1 8 22_8P4R_0402 M_MDA3
MDA2 2 7 M_MDA2
MDA1 3 6 M_MDA1
MDA0 4 5 M_MDA0
MDA7 RP57 1 8 22_8P4R_0402 M_MDA7
MDA5 2 7 M_MDA5
MDA6 3 6 M_MDA6
MDA4 4 5 M_MDA4
MDA11 RP8 1 8 22_8P4R_0402 M_MDA11
MDA10 2 7 M_MDA10
MDA9 3 6 M_MDA9
MDA8 4 5 M_MDA8
MDA15 RP5 1 8 22_8P4R_0402 M_MDA15
MDA14 2 7 M_MDA14
MDA13 3 6 M_MDA13
MDA12 4 5 M_MDA12
MDA19 RP61 1 8 22_8P4R_0402 M_MDA19
MDA18 2 7 M_MDA18
MDA17 3 6 M_MDA17
MDA16 4 5 M_MDA16
MDA23 RP60 1 8 22_8P4R_0402 M_MDA23
MDA22 2 7 M_MDA22
MDA21 3 6 M_MDA21
MDA20 4 5 M_MDA20
MDA27 RP6 1 8 22_8P4R_0402 M_MDA27
MDA26 2 7 M_MDA26
MDA25 3 6 M_MDA25
MDA24 4 5 M_MDA24
MDA31 RP9 1 8 22_8P4R_0402 M_MDA31
MDA30 2 7 M_MDA30
MDA29 3 6 M_MDA29
MDA28 4 5 M_MDA28
MDA34 RP4 1 8 22_8P4R_0402 M_MDA34
MDA35 2 7 M_MDA35
MDA33 3 6 M_MDA33
MDA32 4 5 M_MDA32
MDA38 RP7 1 8 22_8P4R_0402 M_MDA38
MDA39 2 7 M_MDA39
MDA36 3 6 M_MDA36
MDA37 4 5 M_MDA37
MDA42 RP52 1 8 22_8P4R_0402 M_MDA42
MDA43 2 7 M_MDA43
MDA40 3 6 M_MDA40
MDA41 4 5 M_MDA41
MDA46 RP53 1 8 22_8P4R_0402 M_MDA46
MDA47 2 7 M_MDA47
MDA44 3 6 M_MDA44
MDA45 4 5 M_MDA45
MDA51 RP59 1 8 22_8P4R_0402 M_MDA51
MDA49 2 7 M_MDA49
MDA50 3 6 M_MDA50
MDA48 4 5 M_MDA48
MDA55 RP54 1 8 22_8P4R_0402 M_MDA55
MDA53 2 7 M_MDA53
MDA54 3 6 M_MDA54
MDA52 4 5 M_MDA52
MDA59 RP55 1 8 22_8P4R_0402 M_MDA59
MDA58 2 7 M_MDA58
MDA57 3 6 M_MDA57
MDA56 4 5 M_MDA56
MDA63 RP58 1 8 22_8P4R_0402 M_MDA63
MDA62 2 7 M_MDA62
MDA61 3 6 M_MDA61
MDA60 4 5 M_MDA60
13 QSA[7..0]
QSA[7..0]
M_QSA[7..0]
M_QSA[7..0] 16,17
QSA0 R728 2 1 22_0402 M_QSA0
QSA1 R115 2 1 22_0402 M_QSA1
QSA2 R735 2 1 22_0402 M_QSA2
QSA3 R118 2 1 22_0402 M_QSA3
QSA4 R112 2 1 22_0402 M_QSA4
QSA5 R719 2 1 22_0402 M_QSA5
QSA6 R727 2 1 22_0402 M_QSA6
QSA7 R730 2 1 22_0402 M_QSA7

SERIES Resistors

For Bi-Directional signals, Series resistors should be placed close to the memory

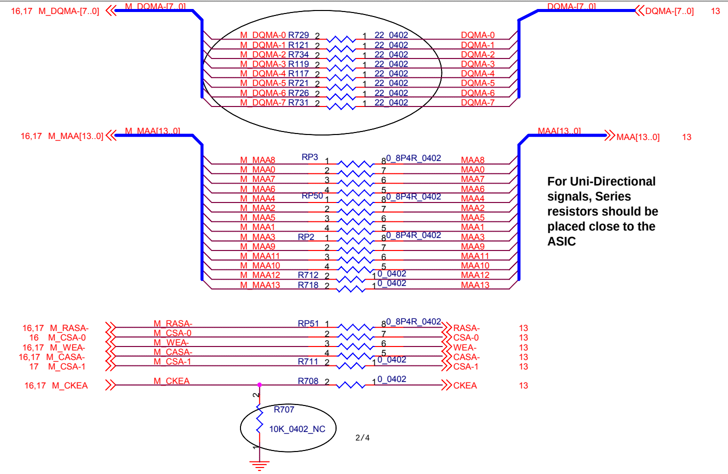
16,17 M_DQMA-[7..0]
M_DQMA-[7..0]
DQMA-[7..0]
DQMA-[7..0] 13
M_DQMA-0 R729 2 1 22_0402 DQMA-0
M_DQMA-1 R121 2 1 22_0402 DQMA-1
M_DQMA-2 R734 2 1 22_0402 DQMA-2
M_DQMA-3 R119 2 1 22_0402 DQMA-3
M_DQMA-4 R117 2 1 22_0402 DQMA-4
M_DQMA-5 R721 2 1 22_0402 DQMA-5
M_DQMA-6 R726 2 1 22_0402 DQMA-6
M_DQMA-7 R731 2 1 22_0402 DQMA-7
16,17 M_MAA[13..0]
M_MAA[13..0]
MAA[13..0]
MAA[13..0] 13
M_MAA8 RP3 1 8 0_8P4R_0402 MAA8
M_MAA0 2 7 MAA0
M_MAA7 3 6 MAA7
M_MAA6 4 5 MAA6
M_MAA4 RP50 1 8 0_8P4R_0402 MAA4
M_MAA2 2 7 MAA2
M_MAA5 3 6 MAA5
M_MAA1 4 5 MAA1
M_MAA3 RP2 1 8 0_8P4R_0402 MAA3
M_MAA9 2 7 MAA9
M_MAA11 3 6 MAA11
M_MAA10 4 5 MAA10
M_MAA12 R712 2 1 0_0402 MAA12
M_MAA13 R718 2 1 0_0402 MAA13
16,17 M_RASA- M_RASA- RP51 1 8 0_8P4R_0402 RASA- 13
16 M_CSA-0 M_CSA-0 2 7 CSA-0 13
16,17 M_WEA- M_WEA- 3 6 WEA- 13
16,17 M_CASA- M_CASA- 4 5 CASA- 13
17 M_CSA-1 M_CSA-1 R711 2 1 0_0402 CSA-1 13
16,17 M_CKEA M_CKEA R708 2 1 0_0402 CKEA 13
R707
10K_0402_NC
2
1
2/4

For Uni-Directional signals, Series resistors should be placed close to the ASIC

CLOCK terminations

Change from 1:1 spacing to at least a 2.5:1 spacing between the pair

These resistors and caps must be placed to minimize any stubs. These must also be placed after the memory

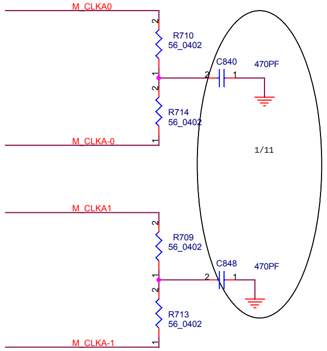
M_CLKA0
R710
56_0402
C840
470PF
R714
56_0402
M_CLKA-0
1/11
M_CLKA1
R709
56_0402
C848
470PF
R713
56_0402
M_CLKA-1

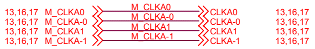
13,16,17 M_CLKA0 M_CLKA0 CLKA0 13,16,17
13,16,17 M_CLKA-0 M_CLKA-0 CLKA-0 13,16,17
13,16,17 M_CLKA1 M_CLKA1 CLKA1 13,16,17
13,16,17 M_CLKA-1 M_CLKA-1 CLKA-1 13,16,17

Title
G600 M24_P-3
Size C
Document Number G600-1-4-01
Rev 1.0
Date: Friday, September 02, 2005
Sheet 14 of 44

TERMINATION FOR MEMORY CHANNEL B

PARALLEL TERMINATION RESISTORS AND DECOUPLING

SSTL_2 CLASS I

PLACE AT NETS MID POINT

PARALLEL TERMINATION COULD BE OMITTED UNDER SOME CIRCUMSTANCE. PLEASE CONSULT WITH ATI FOR DETAIL.

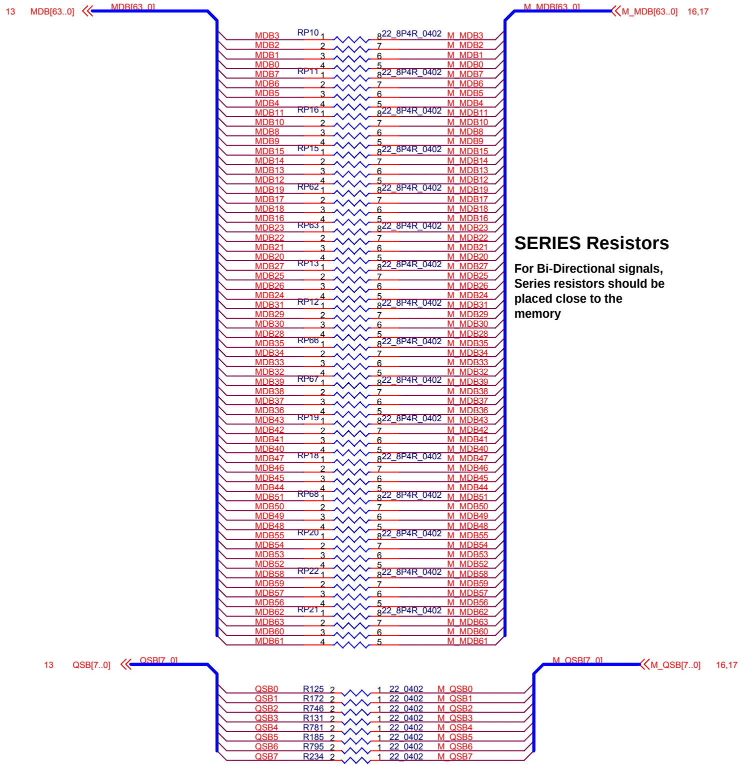
13 MDB[63..0]
MDB[63..0]
M_MDB[63..0]
M_MDB[63..0] 16,17
RP10 RP11 RP16 RP15 RP62 RP63 RP13 RP12 RP66 RP67 RP19 RP18 RP68 RP20 RP22 RP21
22_8P4R_0402
MDB0 … MDB63
M_MDB0 … M_MDB63
13 QSB[7..0]
QSB[7..0]
M_QSB[7..0]
M_QSB[7..0] 16,17
QSB0 R125 22_0402 M_QSB0
QSB1 R172 22_0402 M_QSB1
QSB2 R746 22_0402 M_QSB2
QSB3 R131 22_0402 M_QSB3
QSB4 R781 22_0402 M_QSB4
QSB5 R185 22_0402 M_QSB5
QSB6 R795 22_0402 M_QSB6
QSB7 R234 22_0402 M_QSB7

SERIES Resistors

For Bi-Directional signals, Series resistors should be placed close to the memory

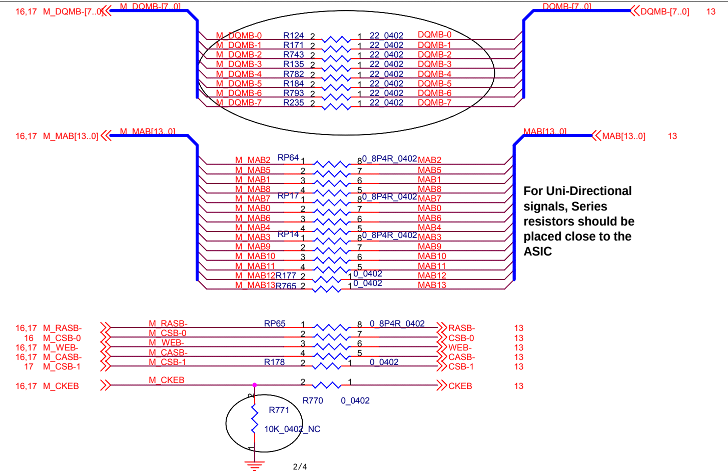
16,17 M_DQMB-[7..0]
M_DQMB-[7..0]
DQMB-[7..0]
DQMB-[7..0] 13
M_DQMB-0 R124 22_0402 DQMB-0
M_DQMB-1 R171 22_0402 DQMB-1
M_DQMB-2 R743 22_0402 DQMB-2
M_DQMB-3 R135 22_0402 DQMB-3
M_DQMB-4 R782 22_0402 DQMB-4
M_DQMB-5 R184 22_0402 DQMB-5
M_DQMB-6 R793 22_0402 DQMB-6
M_DQMB-7 R235 22_0402 DQMB-7
16,17 M_MAB[13..0]
M_MAB[13..0]
MAB[13..0]
MAB[13..0] 13
RP64 0_8P4R_0402
M_MAB2 MAB2
M_MAB5 MAB5
M_MAB1 MAB1
M_MAB8 MAB8
RP17 0_8P4R_0402
M_MAB7 MAB7
M_MAB0 MAB0
M_MAB6 MAB6
M_MAB4 MAB4
RP14 0_8P4R_0402
M_MAB3 MAB3
M_MAB9 MAB9
M_MAB10 MAB10
M_MAB11 MAB11
M_MAB12 R177 0_0402 MAB12
M_MAB13 R765 0_0402 MAB13
16,17 M_RASB- RASB- 13
16 M_CSB-0 CSB-0 13
16,17 M_WEB- WEB- 13
16,17 M_CASB- CASB- 13
17 M_CSB-1 CSB-1 13
RP65 0_8P4R_0402
R178 0_0402
16,17 M_CKEB CKEB 13
R770 0_0402
R771 10K_0402_NC
2/4

For Uni-Directional signals, Series resistors should be placed close to the ASIC

CLOCK terminations

Change from 1:1 spacing to at least a 2.5:1 spacing between the pair

These resistors and caps must be placed to minimize any stubs. These must also be placed after the memory

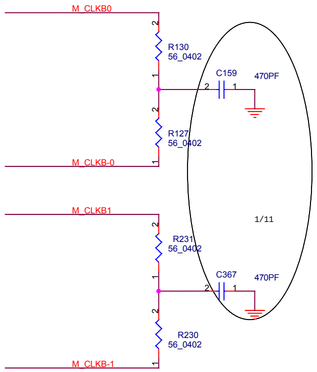
M_CLKB0
R130 56_0402
C159 470PF
R127 56_0402
M_CLKB-0
M_CLKB1
R231 56_0402
C367 470PF
R230 56_0402
M_CLKB-1
1/11

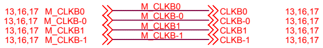
13,16,17 M_CLKB0
13,16,17 M_CLKB-0
13,16,17 M_CLKB1
13,16,17 M_CLKB-1
M_CLKB0
M_CLKB-0
M_CLKB1
M_CLKB-1
CLKB0 13,16,17
CLKB-0 13,16,17
CLKB1 13,16,17
CLKB-1 13,16,17

Title
G600 M24_P-4
Size C
Document Number G600-1-4-01
Rev 1.0
Date: Friday, September 02, 2005
Sheet 15 of 44

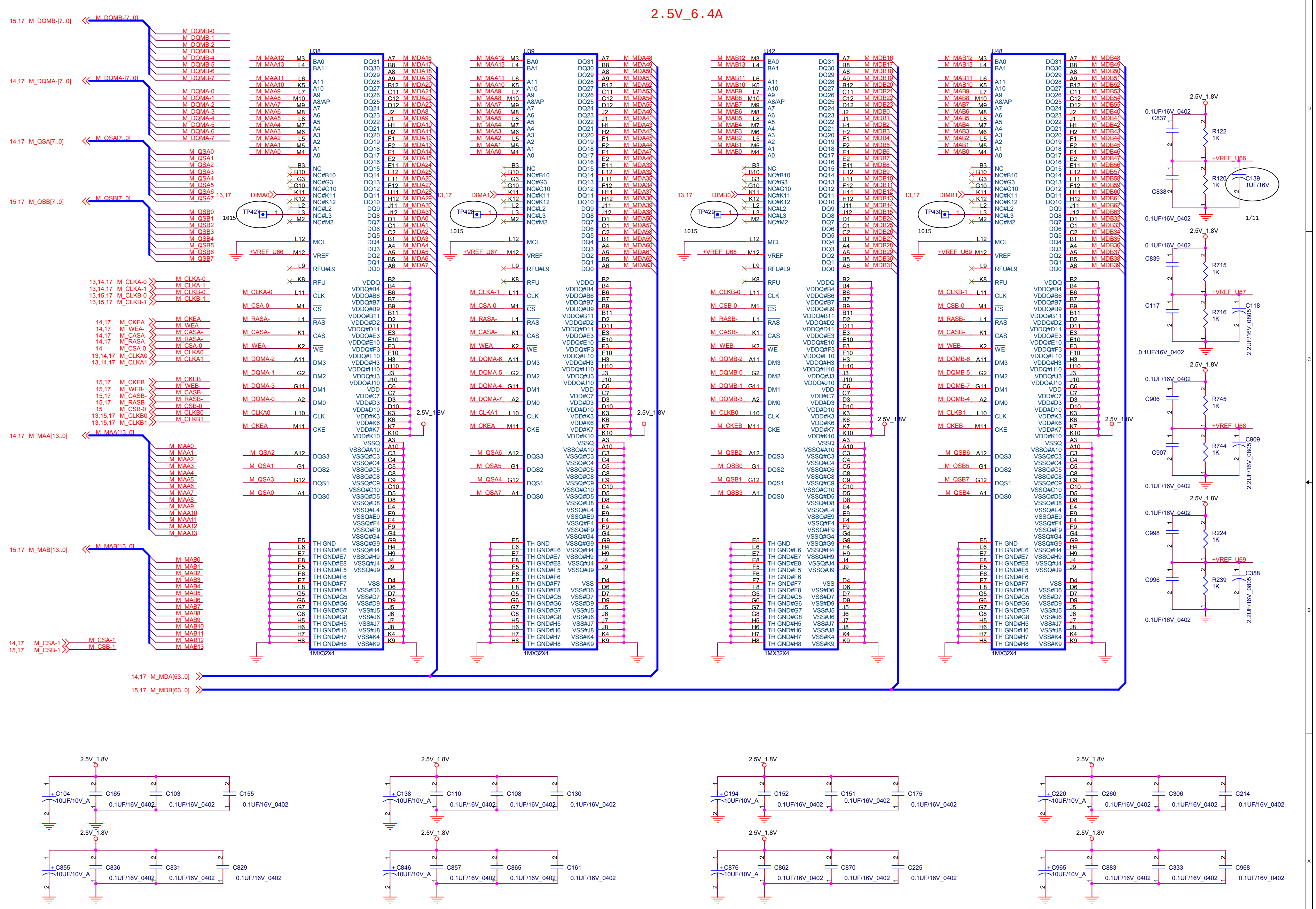
2.5V_6.4A
15,17 M_DQMB-[7..0]
14,17 M_DQMA-[7..0]
14,17 M_QSA[7..0]
15,17 M_QSB[7..0]
14,17 M_MAA[13..0]
15,17 M_MAB[13..0]
14,17 M_CSA-1
15,17 M_CSB-1
14,17 M_MDA[63..0]
15,17 M_MDB[63..0]
U38
U39
U42
U48
1MX32X4
TP427
TP428
TP429
TP430
DIMA0
DIMA1
DIMB0
DIMB1
+VREF_U66
+VREF_U67
+VREF_U68
+VREF_U69
2.5V_1.8V
R122 1K
R120 1K
C139 1UF/16V
C837
C838
R715 1K
R716 1K
C839
C117
C118
R745 1K
R744 1K
C906
C907
C909
R224 1K
R239 1K
C998
C996
C358
0.1UF/16V_0402
2.2UF/16V_0805
1/11
C104 10UF/10V_A
C165
C103
C155
C138 10UF/10V_A
C110
C108
C130
C194 10UF/10V_A
C152
C151
C175
C220 10UF/10V_A
C260
C306
C214
C855 10UF/10V_A
C836
C831
C829
C846 10UF/10V_A
C857
C865
C161
C876 10UF/10V_A
C862
C870
C225
C965 10UF/10V_A
C883
C333
C968
0.1UF/16V_0402

	NET NAME	VOLTAGE
M24	2.5V_1.8V	2.5V
M26	2.5V_1.8V	1.8V

Title
G600 VRAM -1

Size C
Document Number **G600-1-4-01**
Rev 1.0

Date: Friday, September 02, 2005
Sheet 16 of 44

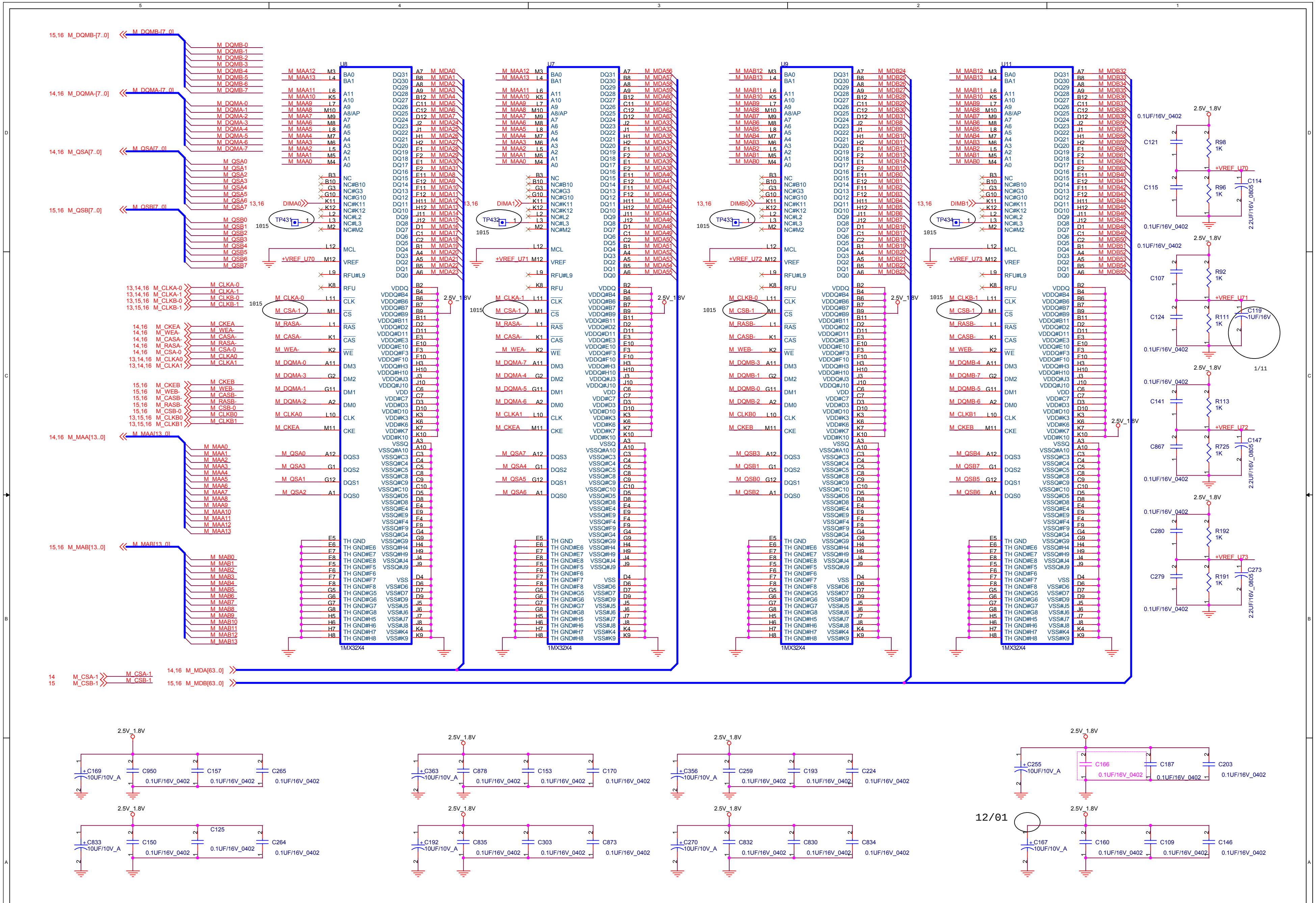
15,16 M_DQMB-[7..0]
14,16 M_DQMA-[7..0]
14,16 M_QSA[7..0]
15,16 M_QSB[7..0]
14,16 M_MAA[13..0]
15,16 M_MAB[13..0]
13,14,16 M_CLKA-0
13,14,16 M_CLKA-1
13,15,16 M_CLKB-0
13,15,16 M_CLKB-1
14,16 M_CKEA
14,16 M_WEA-
14,16 M_CASA-
14,16 M_RASA-
14,16 M_CSA-0
13,14,16 M_CLKA0
13,14,16 M_CLKA1
15,16 M_CKEB
15,16 M_WEB-
15,16 M_CASB-
15,16 M_RASB-
15,16 M_CSB-0
13,15,16 M_CLKB0
13,15,16 M_CLKB1
14 M_CSA-1
15 M_CSB-1
14,16 M_MDA[63..0]
15,16 M_MDB[63..0]
U8
U7
U9
U11
1MX32X4
13,16 DIMA0
13,16 DIMA1
13,16 DIMB0
13,16 DIMB1
TP431
TP432
TP433
TP434
1015
+VREF_U70
+VREF_U71
+VREF_U72
+VREF_U73
2.5V_1.8V
C121
C115
C114
C107
C124
C119
C141
C867
C147
C280
C279
C273
R98 1K
R96 1K
R92 1K
R111 1K
R113 1K
R725 1K
R192 1K
R191 1K
0.1UF/16V_0402
2.2UF/16V_0805
1UF/16V
1/11
C169
C950
C157
C265
C363
C878
C153
C170
C356
C259
C193
C224
C255
C166
C187
C203
C833
C150
C125
C264
C192
C835
C303
C873
C270
C832
C830
C834
C167
C160
C109
C146
10UF/10V_A
0.1UF/16V_0402
12/01

	NET NAME	VOLTAGE
M24	2.5V_1.8V	2.5V
M26	2.5V_1.8V	1.8V

Title
G600 VRAM-2
Size C
Document Number G600-1-4-01
Rev 1.0
Date: Friday, September 02, 2005
Sheet 17 of 44

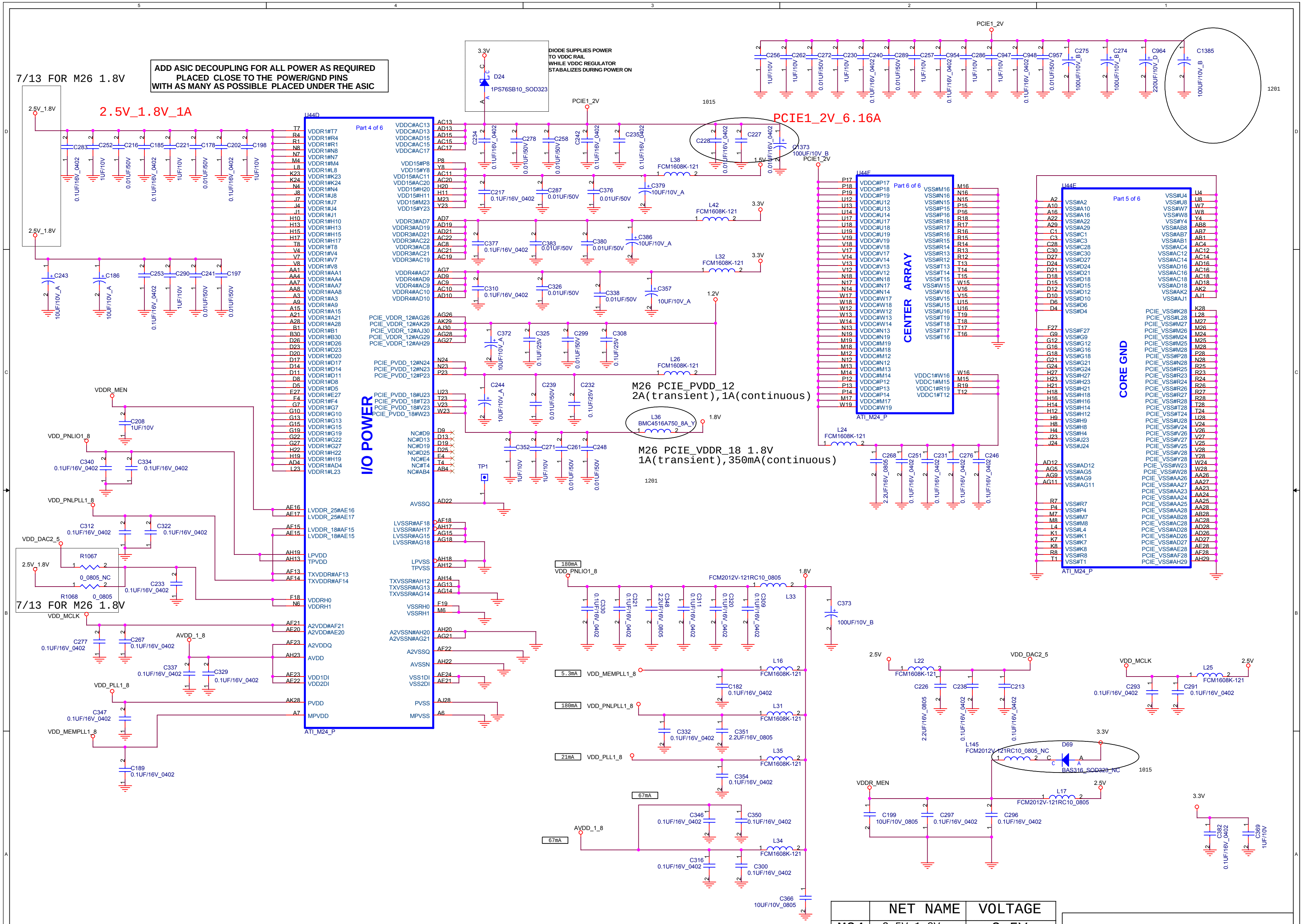
ADD ASIC DECOUPLING FOR ALL POWER AS REQUIRED
PLACED CLOSE TO THE POWER/GND PINS
WITH AS MANY AS POSSIBLE PLACED UNDER THE ASIC
7/13 FOR M26 1.8V
2.5V_1.8V_1A
DIODE SUPPLIES POWER
TO VDDC RAIL
WHILE VDDC REGULATOR
STABALIZES DURING POWER ON
1PS76SB10_SOD323
PCIE1_2V
PCIE1_2V_6.16A
U44D
Part 4 of 6
I/O POWER
ATI_M24_P
U44F
Part 6 of 6
CENTER ARRAY
U44E
Part 5 of 6
CORE GND
M26 PCIE_PVDD_12
2A(transient),1A(continuous)
M26 PCIE_VDDR_18 1.8V
1A(transient),350mA(continuous)
BMC4516A750_8A_Y
FCM1608K-121
FCM2012V-121RC10_0805
180mA
VDD_PNLIO1_8
5.3mA
VDD_MEMPLL1_8
VDD_PNLPLL1_8
21mA
VDD_PLL1_8
67mA
AVDD_1_8
VDDR_MEN
VDD_DAC2_5
VDD_MCLK
BAS316_SOD323_NC
FCM2012V-121RC10_0805_NC
7/13 FOR M26 1.8V
1015
1201

	NET NAME	VOLTAGE
M24	2.5V_1.8V	2.5V
M26	2.5V_1.8V	1.8V

Title
G600 M24_P-5(POWER)

Size C
Document Number **G600-1-4-01**
Rev 1.0

Date: Friday, September 02, 2005
Sheet 18 of 44

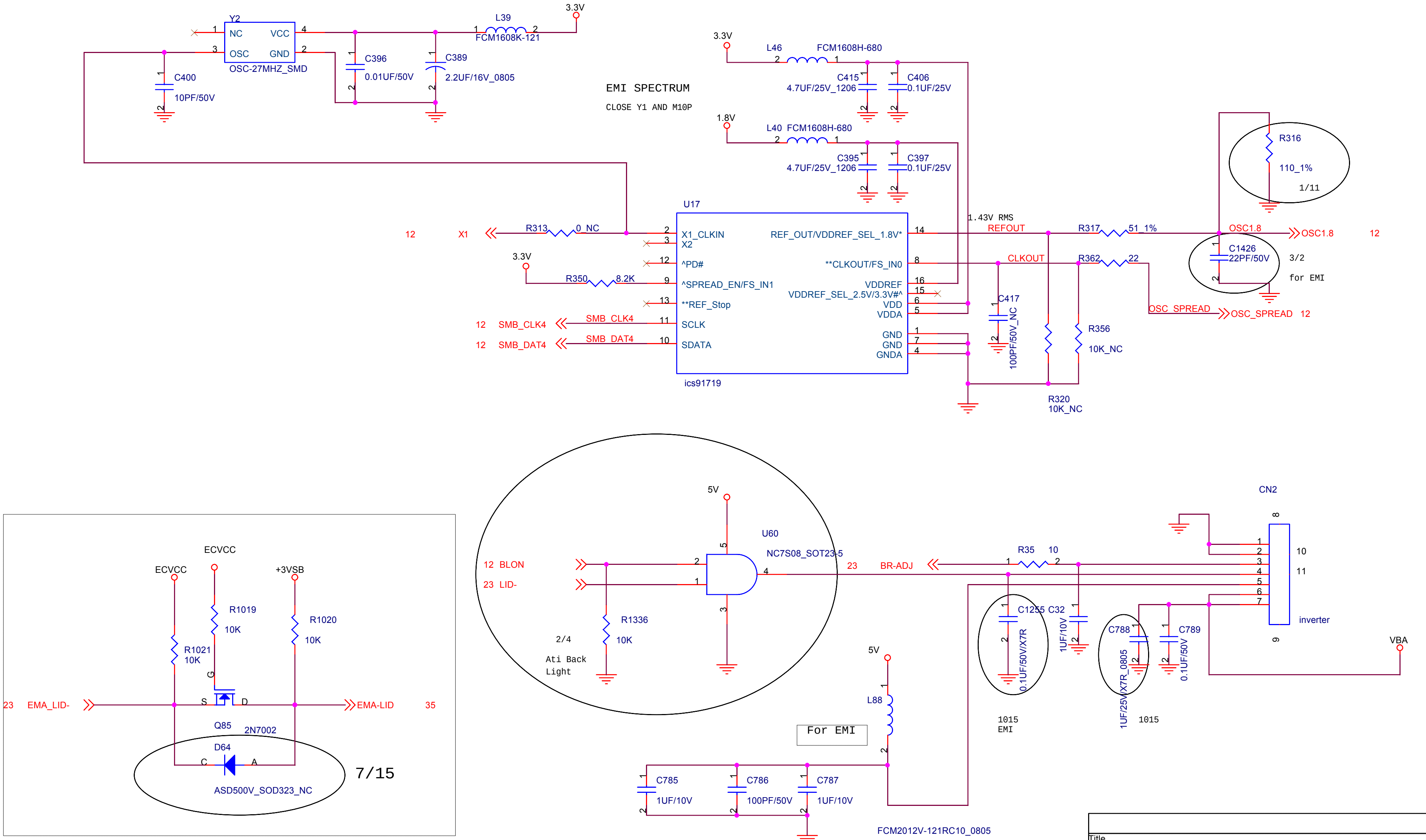
Y2
NC
VCC
OSC
GND
OSC-27MHZ_SMD
1
2
3
4
C400
10PF/50V
C396
0.01UF/50V
C389
2.2UF/16V_0805
L39
FCM1608K-121
3.3V
EMI SPECTRUM
CLOSE Y1 AND M10P
3.3V
L46
FCM1608H-680
C415
4.7UF/25V_1206
C406
0.1UF/25V
1.8V
L40
FCM1608H-680
C395
4.7UF/25V_1206
C397
0.1UF/25V
U17
12
X1
R313
0_NC
X1_CLKIN
X2
3.3V
^PD#
R350
8.2K
^SPREAD_EN/FS_IN1
**REF_Stop
12
SMB_CLK4
SMB_CLK4
SCLK
12
SMB_DAT4
SMB_DAT4
SDATA
ics91719
REF_OUT/VDDREF_SEL_1.8V*
**CLKOUT/FS_IN0
VDDREF
VDDREF_SEL_2.5V/3.3V#^
VDD
VDDA
GND
GND
GNDA
1.43V RMS
REFOUT
CLKOUT
C417
100PF/50V_NC
R320
10K_NC
R356
10K_NC
R317
51_1%
R362
22
OSC1.8
OSC1.8
12
C1426
22PF/50V
3/2
for EMI
OSC_SPREAD
OSC_SPREAD
12
R316
110_1%
1/11
ECVCC
ECVCC
+3VSB
R1019
10K
R1020
10K
R1021
10K
23
EMA_LID-
EMA-LID
35
G
S
D
Q85
2N7002
D64
C
A
ASD500V_SOD323_NC
7/15
5V
U60
NC7S08_SOT23-5
12 BLON
23 LID-
R1336
10K
2/4
Ati Back
Light
23
BR-ADJ
R35
10
CN2
10
11
inverter
C1255
C32
0.1UF/50V/X7R
1UF/10V
1015
EMI
C788
C789
1UF/25V/X7R_0805
0.1UF/50V
1015
VBA
5V
L88
For EMI
C785
1UF/10V
C786
100PF/50V
C787
1UF/10V
FCM2012V-121RC10_0805

Title
G600 M24_P-6

Size	Document Number	Rev
B	G600-1-4-01	1.0

Date: Friday, September 02, 2005 Sheet 19 of 44

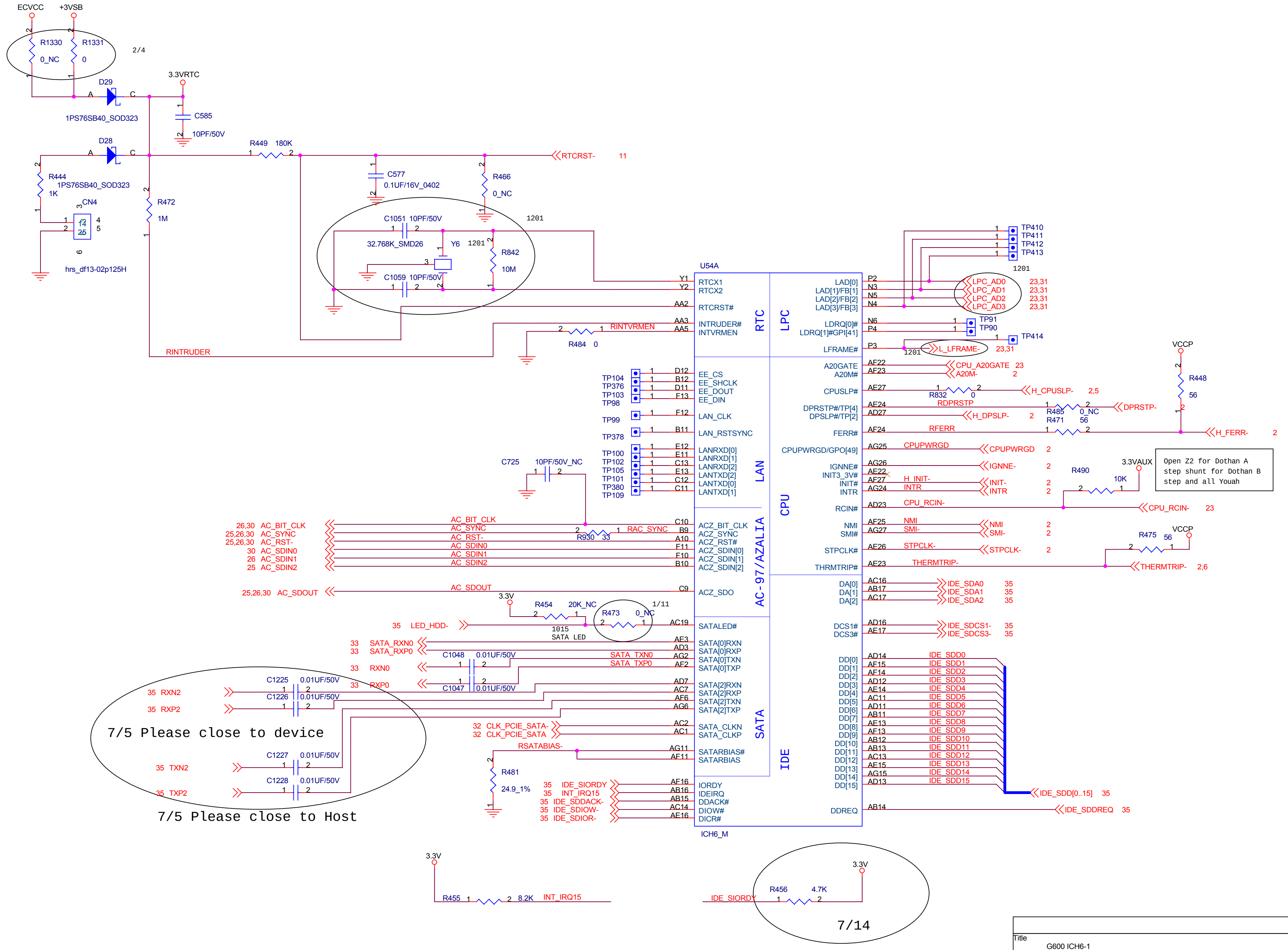
ECVCC
+3VSB
R1330 0_NC
R1331 0
2/4
3.3VRTC
D29 1PS76SB40_SOD323
C585 10PF/50V
D28
R444 1K
1PS76SB40_SOD323
CN4
hrs_df13-02p125H
R472 1M
R449 180K
C577 0.1UF/16V_0402
R466 0_NC
RTCRST- 11
C1051 10PF/50V
1201
32.768K_SMD26
Y6
R842 10M
C1059 10PF/50V
RINTRUDER
RINTVRMEN
R484 0
U54A
RTCX1
RTCX2
RTCRST#
INTRUDER#
INTVRMEN
RTC
LPC
LAD[0]
LAD[1]/FB[1]
LAD[2]/FB[2]
LAD[3]/FB[3]
LDRQ[0]#
LDRQ[1]#GPI[41]
LFRAME#
TP410
TP411
TP412
TP413
LPC_AD0 23,31
LPC_AD1 23,31
LPC_AD2 23,31
LPC_AD3 23,31
TP91
TP90
TP414
L_LFRAME- 23,31
VCCP
R448 56
A20GATE
A20M#
CPU_A20GATE 23
A20M- 2
CPUSLP#
R832 0
H_CPUSLP- 2,5
DPRSTP#/TP[4]
DPSLP#/TP[2]
RDPRSTP
R485 0_NC
R471 56
DPRSTP-
H_DPSLP- 2
FERR#
RFERR
H_FERR- 2
CPUPWRGD/GPO[49]
CPUPWRGD
CPUPWRGD 2
IGNNE#
INIT3_3V#
INIT#
INTR
IGNNE- 2
H_INIT-
INIT- 2
INTR 2
3.3VAUX
R490 10K
Open Z2 for Dothan A
step shunt for Dothan B
step and all Youah
CPU
RCIN#
CPU_RCIN-
CPU_RCIN- 23
NMI
SMI#
NMI 2
SMI- 2
STPCLK#
STPCLK- 2
R475 56
THRMTRIP#
THERMTRIP- 2,6
EE_CS
EE_SHCLK
EE_DOUT
EE_DIN
TP104
TP376
TP103
TP98
LAN_CLK
TP99
LAN_RSTSYNC
TP378
LANRXD[0]
LANRXD[1]
LANRXD[2]
LANTXD[2]
LANTXD[0]
LANTXD[1]
TP100
TP102
TP105
TP101
TP380
TP109
LAN
C725 10PF/50V_NC
26,30 AC_BIT_CLK
25,26,30 AC_SYNC
25,26,30 AC_RST-
30 AC_SDIN0
26 AC_SDIN1
25 AC_SDIN2
RAC_SYNC
R930 33
ACZ_BIT_CLK
ACZ_SYNC
ACZ_RST#
ACZ_SDIN[0]
ACZ_SDIN[1]
ACZ_SDIN[2]
AC-97/AZALIA
25,26,30 AC_SDOUT
ACZ_SDO
3.3V
R454 20K_NC
R473 0_NC
1/11
35 LED_HDD-
1015 SATA LED
SATALED#
33 SATA_RXN0
33 SATA_RXP0
C1048 0.01UF/50V
SATA_TXN0
SATA_TXP0
33 RXN0
33 RXP0
C1047 0.01UF/50V
SATA[0]RXN
SATA[0]RXP
SATA[0]TXN
SATA[0]TXP
C1225 0.01UF/50V
35 RXN2
C1226 0.01UF/50V
35 RXP2
SATA[2]RXN
SATA[2]RXP
SATA[2]TXN
SATA[2]TXP
7/5 Please close to device
32 CLK_PCIE_SATA-
32 CLK_PCIE_SATA
SATA_CLKN
SATA_CLKP
SATA
RSATABIAS-
SATARBIAS#
SATARBIAS
C1227 0.01UF/50V
35 TXN2
C1228 0.01UF/50V
35 TXP2
7/5 Please close to Host
R481 24.9_1%
35 IDE_SIORDY
35 INT_IRQ15
35 IDE_SDDACK-
35 IDE_SDIOW-
35 IDE_SDIOR-
IORDY
IDEIRQ
DDACK#
DIOW#
DICR#
ICH6_M
DA[0]
DA[1]
DA[2]
IDE_SDA0 35
IDE_SDA1 35
IDE_SDA2 35
DCS1#
DCS3#
IDE_SDCS1- 35
IDE_SDCS3- 35
DD[0]…DD[15]
IDE_SDD0
IDE_SDD1
IDE_SDD2
IDE_SDD3
IDE_SDD4
IDE_SDD5
IDE_SDD6
IDE_SDD7
IDE_SDD8
IDE_SDD9
IDE_SDD10
IDE_SDD11
IDE_SDD12
IDE_SDD13
IDE_SDD14
IDE_SDD15
IDE_SDD[0..15] 35
IDE
DDREQ
IDE_SDDREQ 35
R455 8.2K INT_IRQ15
IDE_SIORDY
R456 4.7K
7/14

Title
G600 ICH6-1

Size
Document Number
G600-1-4-01
Rev
1.0

Date: Friday, September 02, 2005 Sheet 20 of 44

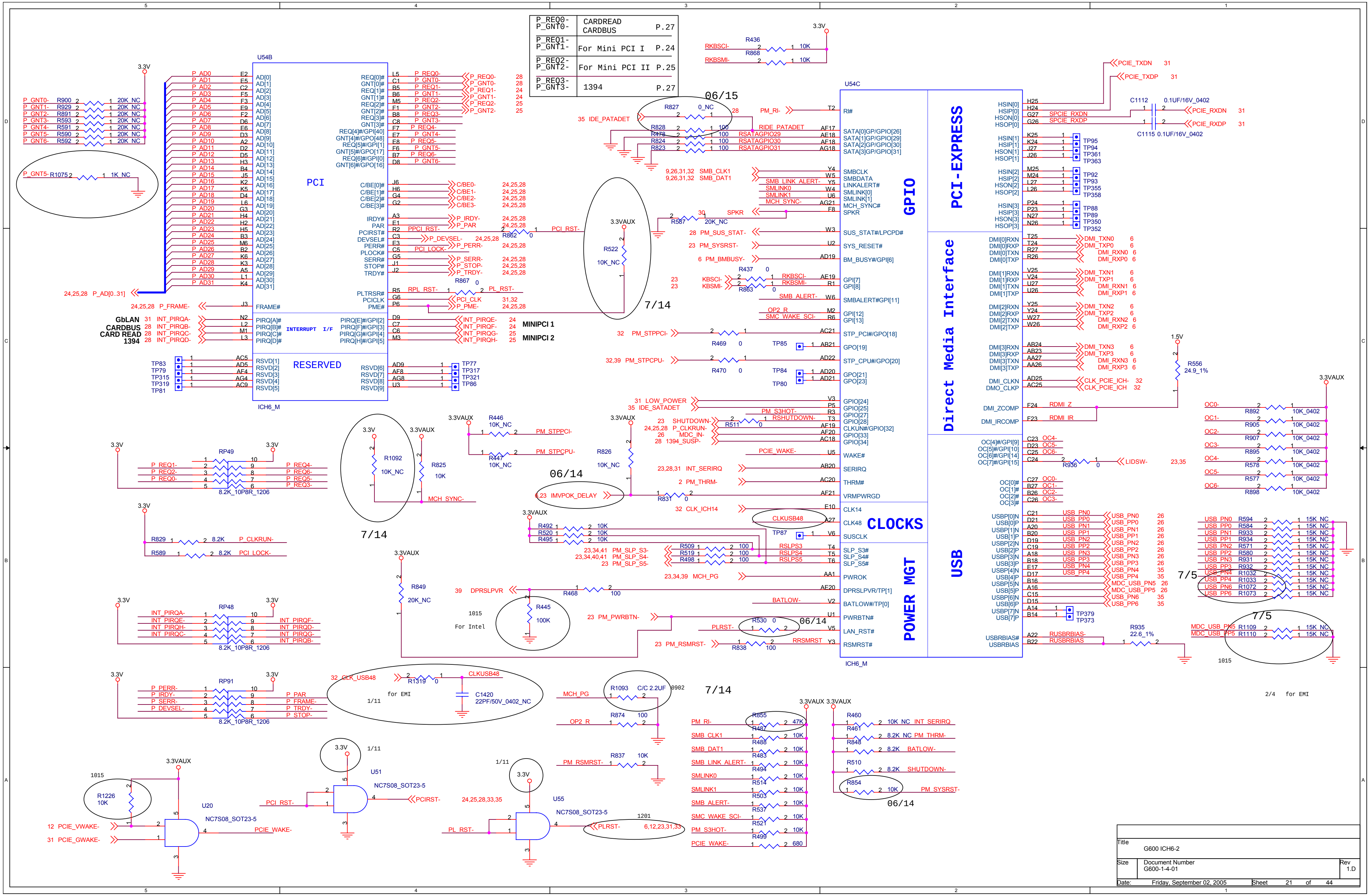
U54B
PCI
RESERVED
ICH6_M
U54C
GPIO
PCI-EXPRESS
Direct Media Interface
CLOCKS
USB
POWER MGT
INTERRUPT I/F
3.3V
3.3VAUX
1.5V
GbLAN
CARDBUS
CARD READ
1394
MINIPCI 1
MINIPCI 2
P_AD[0..31]
P_FRAME-
INT_PIRQA-
INT_PIRQB-
INT_PIRQC-
INT_PIRQD-
P_GNT0- R900 20K_NC
P_GNT1- R929 20K_NC
P_GNT2- R891 20K_NC
P_GNT3- R593 20K_NC
P_GNT4- R591 20K_NC
P_GNT5- R590 20K_NC
P_GNT6- R592 20K_NC
P_GNT5- R1075 1K_NC
RP49 8.2K_10P8R_1206
RP48 8.2K_10P8R_1206
RP91 8.2K_10P8R_1206
R1092 10K_NC
R825 10K
MCH_SYNC-
R446 10K_NC PM_STPPCI-
R447 10K_NC PM_STPCPU-
R826 10K_NC
R522 10K_NC
R827 0_NC
IDE_PATADET
R828 R478 R824 R823 100
RIDE_PATADET
RSATAGPIO29
RSATAGPIO30
RSATAGPIO31
R436 10K RKBSCI-
R868 10K RKBSMI-
SMB_CLK1
SMB_DAT1
SMB_LINK_ALERT-
SMLINK0
SMLINK1
R587 20K_NC SPKR
PM_SUS_STAT-
PM_SYSRST-
PM_BMBUSY-
R437 R863 KBSCI- KBSMI-
SMB_ALERT-
OP2_R
SMC_WAKE_SCI-
PM_STPPCI-
PM_STPCPU-
R469 0 TP85
R470 0 TP84 TP80
LOW_POWER
PM_S3HOT-
SHUTDOWN-
RSHUTDOWN-
R511 0
P_CLKRUN-
MDC_IN-
1394_SUSP-
PCIE_WAKE-
INT_SERIRQ
PM_THRM-
IMVPOK_DELAY
R831 0
CLK_ICH14
CLKUSB48
TP87
R492 R520 R495 10K
PM_SLP_S3-
PM_SLP_S4-
PM_SLP_S5-
R509 R519 R498 100
RSLPS3 RSLPS4 RSLPS5
MCH_PG
DPRSLPVR
R468 100
BATLOW-
R445 100K
For Intel
PM_PWRBTN-
PLRST-
R530 0
PM_RSMRST-
R838 100 RRSMRST
R849 20K_NC
PCIE_TXDN PCIE_TXDP
C1112 0.1UF/16V_0402
C1115 0.1UF/16V_0402
SPCIE_RXDN SPCIE_RXDP
PCIE_RXDN PCIE_RXDP
TP95 TP94 TP361 TP363
TP92 TP93 TP355 TP358
TP88 TP89 TP350 TP352
DMI_TXN0 DMI_TXP0 DMI_RXN0 DMI_RXP0
DMI_TXN1 DMI_TXP1 DMI_RXN1 DMI_RXP1
DMI_TXN2 DMI_TXP2 DMI_RXN2 DMI_RXP2
DMI_TXN3 DMI_TXP3 DMI_RXN3 DMI_RXP3
CLK_PCIE_ICH- CLK_PCIE_ICH
R556 24.9_1%
RDMI_Z RDMI_IR
OC0- OC1- OC2- OC3- OC4- OC5- OC6-
R936 0 LIDSW-
R892 R905 R907 R895 R578 R577 R898 10K_0402
USB_PN0 USB_PP0 USB_PN1 USB_PP1 USB_PN2 USB_PP2 USB_PN3 USB_PP3 USB_PN4 USB_PP4
MDC_USB_PN5 MDC_USB_PP5 USB_PN6 USB_PP6
R594 R584 R933 R934 R580 R571 R931 R932 R1032 R1033 R1072 R1073 15K_NC
R1109 R1110 15K_NC
TP379 TP373
RUSBRBIAS- RUSBRBIAS
R935 22.6_1%
R1319 0
C1420 22PF/50V_0402_NC
for EMI
R1093 C/C 2.2UF 0902
R874 100
OP2_R
R837 10K
PM_RI-
R855 47K
R487 R488 R483 R494 R514 R503 R537 R521 R499 10K
R499 680
R460 10K_NC INT_SERIRQ
R461 8.2K_NC PM_THRM-
R848 8.2K BATLOW-
R510 8.2K SHUTDOWN-
R854 10K PM_SYSRST-
R1226 10K
U20 NC7S08_SOT23-5
PCIE_VWAKE-
PCIE_GWAKE-
PCIE_WAKE-
U51 NC7S08_SOT23-5
PCI_RST-
PCIRST-
U55 NC7S08_SOT23-5
PL_RST-
PLRST-
06/15
06/14
7/14
7/5
1/11
1015
1201
2/4 for EMI

P_REQ0- P_GNT0-	CARDREAD CARDBUS	P.27
P_REQ1- P_GNT1-	For Mini PCI I	P.24
P_REQ2- P_GNT2-	For Mini PCI II	P.25
P_REQ3- P_GNT3-	1394	P.27

Title
G600 ICH6-2

Size Document Number
G600-1-4-01

Rev
1.D

Date: Friday, September 02, 2005 Sheet 21 of 44

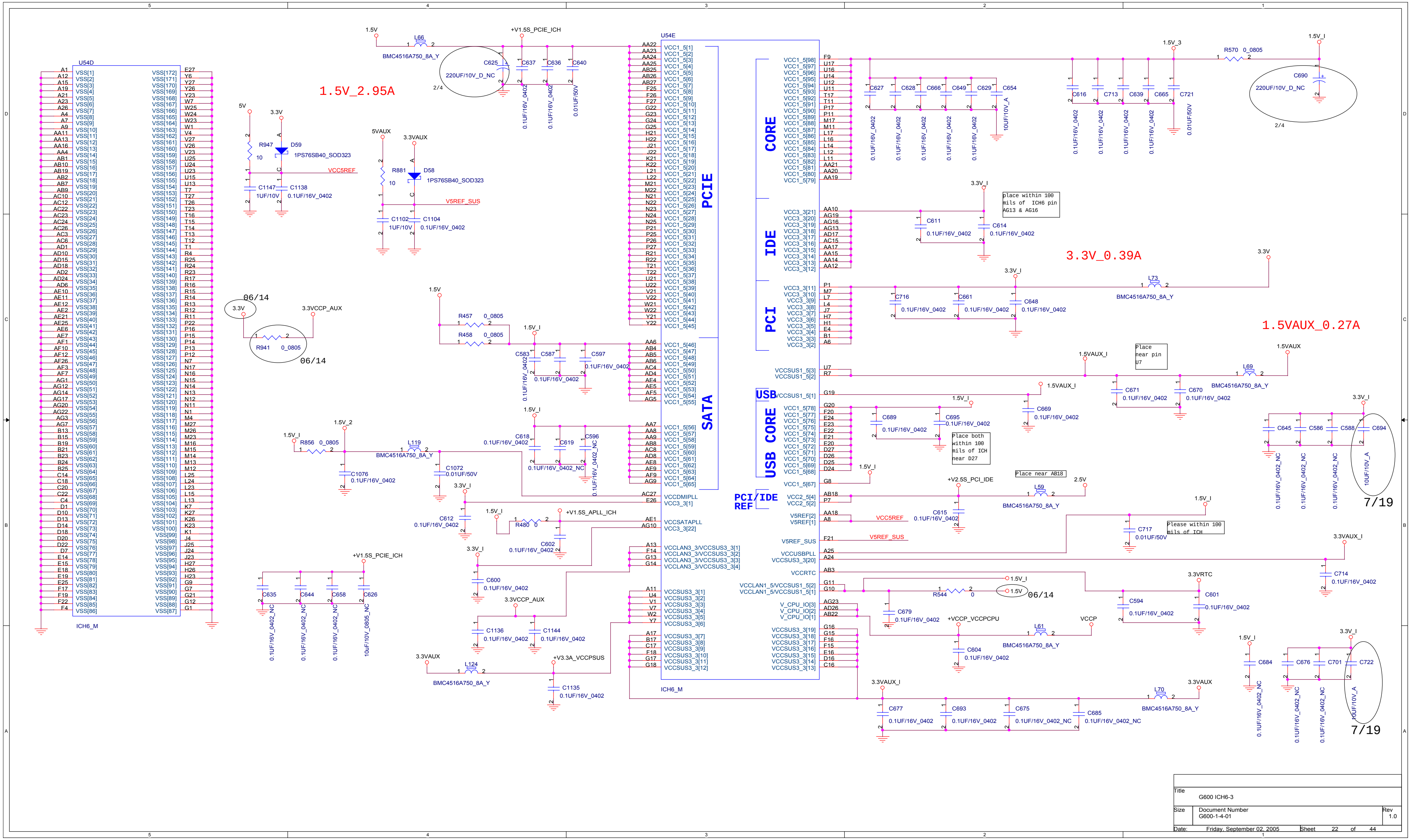
U54D
ICH6_M
VSS[1]
VSS[172]
1.5V_2.95A
5V
3.3V
R947
10
D59
1PS76SB40_SOD323
VCC5REF
C1147
1UF/10V
C1138
0.1UF/16V_0402
5VAUX
3.3VAUX
R881
10
D58
1PS76SB40_SOD323
V5REF_SUS
C1102
1UF/10V
C1104
0.1UF/16V_0402
06/14
3.3V
R941
0_0805
06/14
3.3VCCP_AUX
1.5V
R457
0_0805
R458
0_0805
1.5V_I
C583
C587
C597
0.1UF/16V_0402
1.5V_2
R856
0_0805
L119
BMC4516A750_8A_Y
C1076
0.1UF/16V_0402
C1072
0.01UF/50V
C618
C619
C596
0.1UF/16V_0402_NC
C612
0.1UF/16V_0402
R480
0
+V1.5S_APLL_ICH
C602
0.1UF/16V_0402
C600
0.1UF/16V_0402
3.3VCCP_AUX
C1136
C1144
0.1UF/16V_0402
+V1.5S_PCIE_ICH
C635
C644
C658
C626
0.1UF/16V_0402_NC
10uF/10V_0805_NC
3.3VAUX
L124
BMC4516A750_8A_Y
+V3.3A_VCCPSUS
C1135
0.1UF/16V_0402
1.5V
L66
BMC4516A750_8A_Y
+V1.5S_PCIE_ICH
C625
220UF/10V_D_NC
2/4
C637
C636
C640
0.1UF/16V_0402
0.01UF/50V
U54E
PCIE
SATA
CORE
IDE
PCI
USB
USB CORE
PCI/IDE REF
VCC1_5[1] … VCC1_5[98]
VCC3_3[1] … VCC3_3[22]
VCCDMIPLL
VCCSATAPLL
VCCLAN3_3/VCCSUS3_3[1]
VCCLAN3_3/VCCSUS3_3[2]
VCCLAN3_3/VCCSUS3_3[3]
VCCLAN3_3/VCCSUS3_3[4]
VCCSUS3_3[1] … VCCSUS3_3[19]
VCCSUS1_5[1]
VCCSUS1_5[2]
VCC2_5[4]
VCC2_5[2]
V5REF[2]
V5REF[1]
V5REF_SUS
VCCUSBPLL
VCCRTC
VCCLAN1_5/VCCSUS1_5[2]
VCCLAN1_5/VCCSUS1_5[1]
V_CPU_IO[3]
V_CPU_IO[2]
V_CPU_IO[1]
ICH6_M
C627
C628
C666
C649
C629
C654
0.1UF/16V_0402
10UF/10V_A
C616
C713
C639
C665
C721
0.01UF/50V
1.5V_3
R570
0_0805
1.5V_I
C690
220UF/10V_D_NC
2/4
3.3V_I
place within 100 mils of ICH6 pin AG13 & AG16
C611
C614
0.1UF/16V_0402
3.3V_0.39A
3.3V
3.3V_I
L73
BMC4516A750_8A_Y
C716
C661
C648
0.1UF/16V_0402
1.5VAUX_0.27A
Place near pin U7
1.5VAUX_I
1.5VAUX
L69
BMC4516A750_8A_Y
C671
C670
0.1UF/16V_0402
1.5VAUX_I
C669
1.5V_I
C689
C695
Place both within 100 mils of ICH near D27
3.3V_I
C645
C586
C588
C694
0.1UF/16V_0402_NC
10UF/10V_A
7/19
1.5V_I
Place near AB18
+V2.5S_PCI_IDE
2.5V
L59
BMC4516A750_8A_Y
VCC5REF
C615
0.1UF/16V_0402
V5REF_SUS
1.5V_I
C717
0.01UF/50V
Please within 100 mils of ICH
3.3VAUX_I
C714
0.1UF/16V_0402
1.5V_I
1.5V
R544
0
06/14
3.3VRTC
C594
C601
0.1UF/16V_0402
C679
0.1UF/16V_0402
+VCCP_VCCPCPU
VCCP
L61
BMC4516A750_8A_Y
C604
0.1UF/16V_0402
1.5V_I
C684
3.3V_I
C676
C701
C722
0.1UF/16V_0402_NC
10UF/10V_A
7/19
3.3VAUX_I
3.3VAUX
L70
BMC4516A750_8A_Y
C677
C693
C675
C685
0.1UF/16V_0402
0.1UF/16V_0402_NC

Title	G600 ICH6-3	
Size	Document Number G600-1-4-01	Rev 1.0
Date:	Friday, September 02, 2005	Sheet 22 of 44

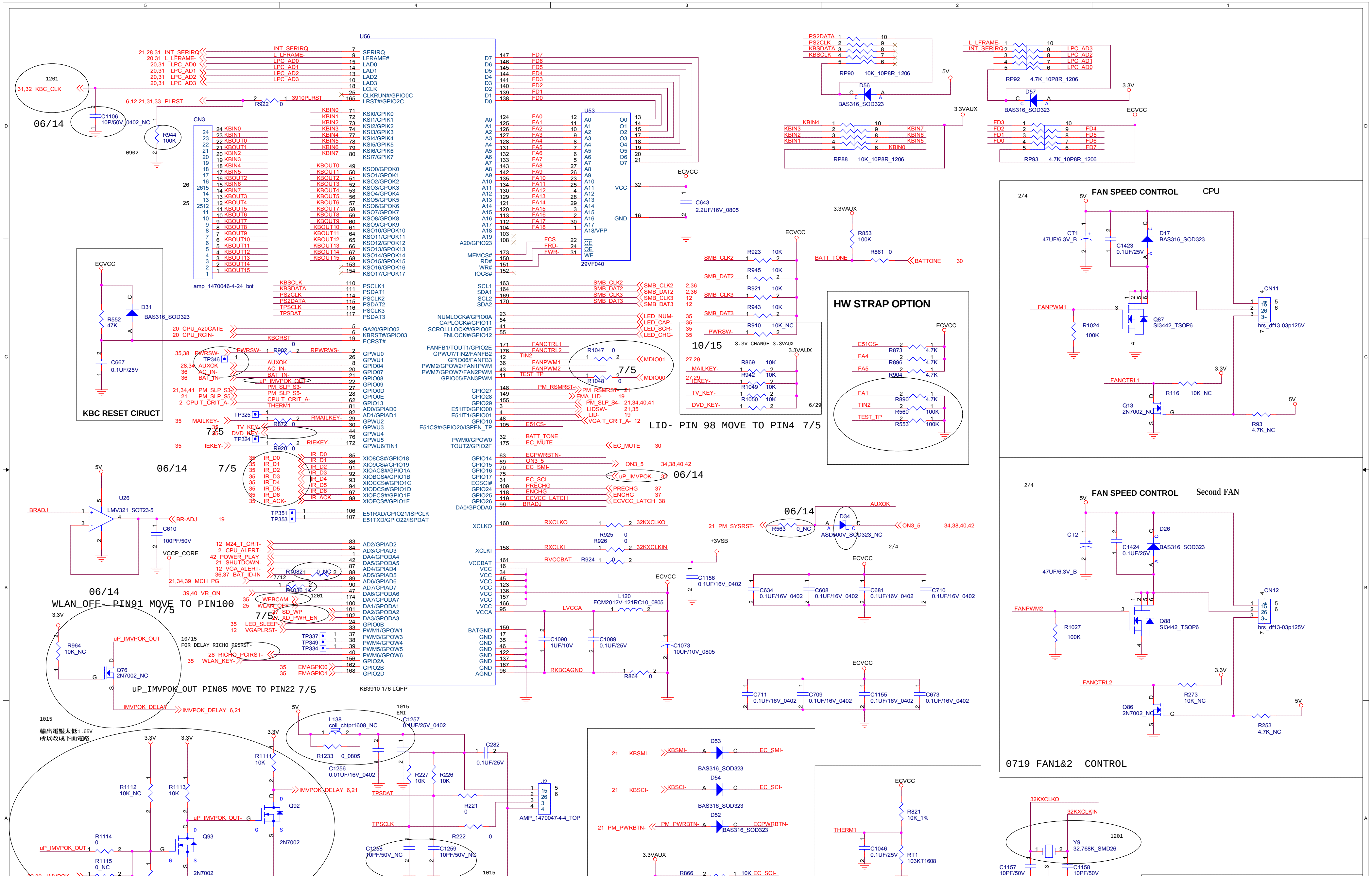
U56
KB3910 176 LQFP
06/14
KBC RESET CIRUCT
CN3
amp_1470046-4-24_bot
U26
LMV321_SOT23-5
06/14
7/5
WLAN_OFF- PIN91 MOVE TO PIN100
7/5
uP_IMVPOK_OUT PIN85 MOVE TO PIN22 7/5
10/15
FOR DELAY RICHO PCIRST-
U?
29VF040
HW STRAP OPTION
10/15
3.3V CHANGE 3.3VAUX
LID- PIN 98 MOVE TO PIN4 7/5
06/14
06/14
FAN SPEED CONTROL
CPU
FAN SPEED CONTROL
Second FAN
0719 FAN1&2 CONTROL
1015
輸出電壓太低1.65V
所以改成下面電路
TOUCH PAD CIRUCT
7/23 J2 BOTTOM
AMP_1470047-4-4_TOP
SYSTEM THERM SENSOR
CLOSE TO CHIP
Y9
32.768K_SMD26

Title
G600 KBC 3910

Size	Document Number	Rev
Custom	G600-1-4-01	1.D

Date: Friday, September 02, 2005 Sheet 23 of 44

MINI PCI SOCKET 1

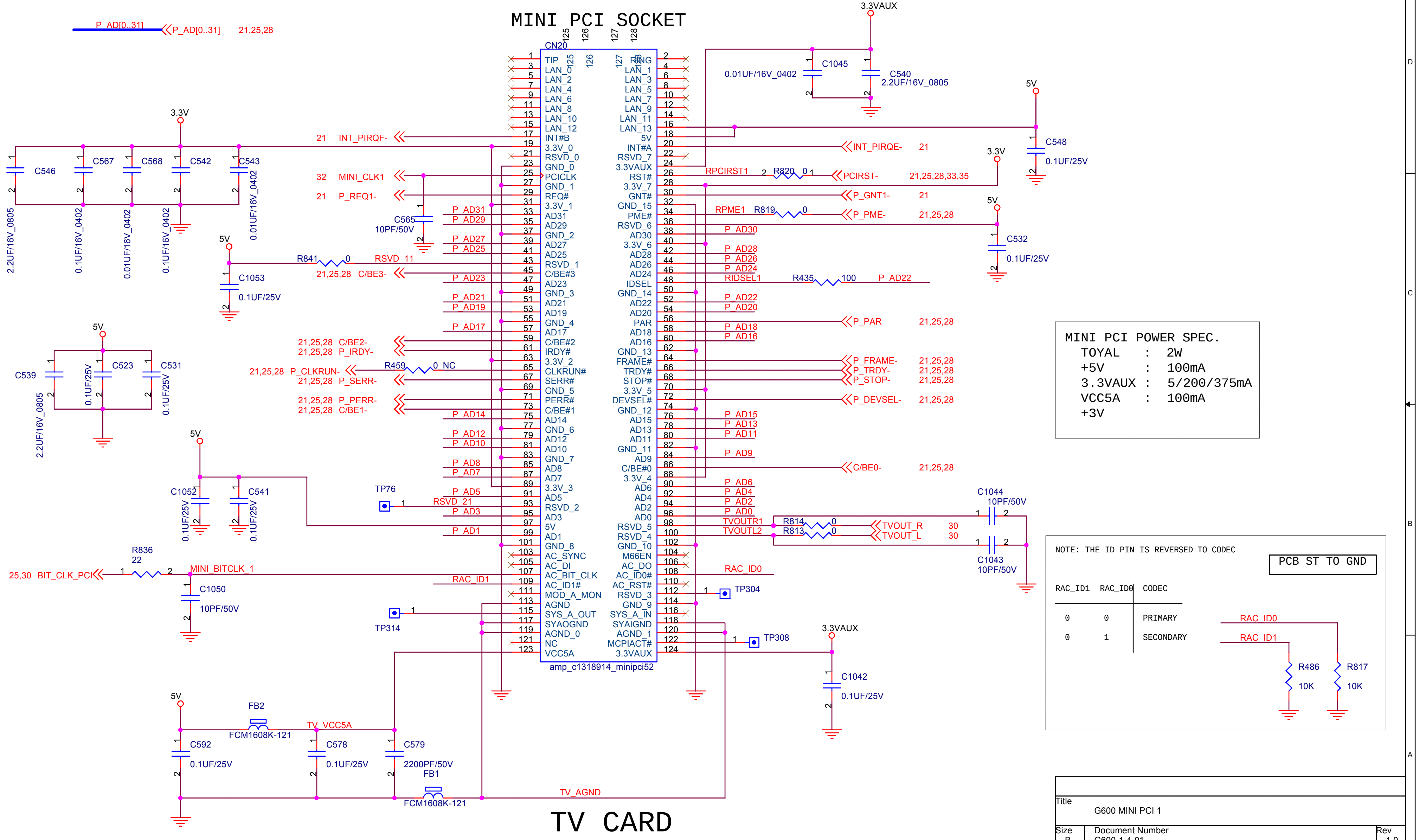
MINI PCI SOCKET
CN20
amp_c1318914_minipci52
P_AD[0..31]
21,25,28
3.3VAUX
C1045
0.01UF/16V_0402
C540
2.2UF/16V_0805
5V
C548
0.1UF/25V
3.3V
C546
C567
C568
C542
C543
2.2UF/16V_0805
0.1UF/16V_0402
0.01UF/16V_0402
21 INT_PIRQF-
32 MINI_CLK1
21 P_REQ1-
C565
10PF/50V
R841 0
RSVD_11
21,25,28 C/BE3-
C1053
TIP
LAN_0
LAN_2
LAN_4
LAN_6
LAN_8
LAN_10
LAN_12
INT#B
3.3V_0
RSVD_0
GND_0
PCICLK
GND_1
REQ#
3.3V_1
AD31
AD29
GND_2
AD27
AD25
RSVD_1
C/BE#3
AD23
GND_3
AD21
AD19
GND_4
AD17
C/BE#2
IRDY#
3.3V_2
CLKRUN#
SERR#
GND_5
PERR#
C/BE#1
AD14
GND_6
AD12
AD10
GND_7
AD8
AD7
3.3V_3
AD5
RSVD_2
AD3
5V
AD1
GND_8
AC_SYNC
AC_DI
AC_BIT_CLK
AC_ID1#
MOD_A_MON
AGND
SYS_A_OUT
SYAOGND
AGND_0
NC
VCC5A
RING
LAN_1
LAN_3
LAN_5
LAN_7
LAN_9
LAN_11
LAN_13
5V
INT#A
RSVD_7
3.3VAUX
RST#
3.3V_7
GNT#
GND_15
PME#
RSVD_6
AD30
3.3V_6
AD28
AD26
AD24
IDSEL
GND_14
AD22
AD20
PAR
AD18
AD16
GND_13
FRAME#
TRDY#
STOP#
3.3V_5
DEVSEL#
GND_12
AD15
AD13
AD11
GND_11
AD9
C/BE#0
3.3V_4
AD6
AD4
AD2
AD0
RSVD_5
RSVD_4
GND_10
M66EN
AC_DO
AC_ID0#
AC_RST#
RSVD_3
GND_9
SYS_A_IN
SYAIGND
AGND_1
MCPIACT#
3.3VAUX
INT_PIRQE- 21
RPCIRST1
R820 0
PCIRST- 21,25,28,33,35
P_GNT1- 21
RPME1 R819 0
P_PME- 21,25,28
C532
RIDSEL1
R435 100
P_AD22
P_PAR 21,25,28
P_FRAME- 21,25,28
P_TRDY- 21,25,28
P_STOP- 21,25,28
P_DEVSEL- 21,25,28
C/BE0- 21,25,28
C1044
10PF/50V
TVOUTR1
TVOUTL2
R814 0
R813 0
TVOUT_R 30
TVOUT_L 30
C1043
10PF/50V
RAC_ID0
TP304
TP308
C1042
0.1UF/25V
C539
C523
C531
0.1UF/25V
21,25,28 C/BE2-
21,25,28 P_IRDY-
21,25,28 P_CLKRUN-
R459 0 NC
21,25,28 P_SERR-
21,25,28 P_PERR-
21,25,28 C/BE1-
C1052
C541
TP76
RSVD_21
R836
22
25,30 BIT_CLK_PCI
MINI_BITCLK_1
RAC_ID1
C1050
10PF/50V
TP314
FB2
FCM1608K-121
TV_VCC5A
C592
0.1UF/25V
C578
0.1UF/25V
C579
2200PF/50V
FB1
FCM1608K-121
TV_AGND
TV CARD
R486
10K
R817
10K

MINI PCI POWER SPEC.

TOYAL	:	2W
+5V	:	100mA
3.3VAUX	:	5/200/375mA
VCC5A	:	100mA
+3V		

NOTE: THE ID PIN IS REVERSED TO CODEC

PCB ST TO GND

RAC_ID1	RAC_ID0	CODEC
0	0	PRIMARY
0	1	SECONDARY

Title	G600 MINI PCI 1	
Size B	Document Number G600-1-4-01	Rev 1.0
Date:	Friday, September 02, 2005	Sheet 24 of 44

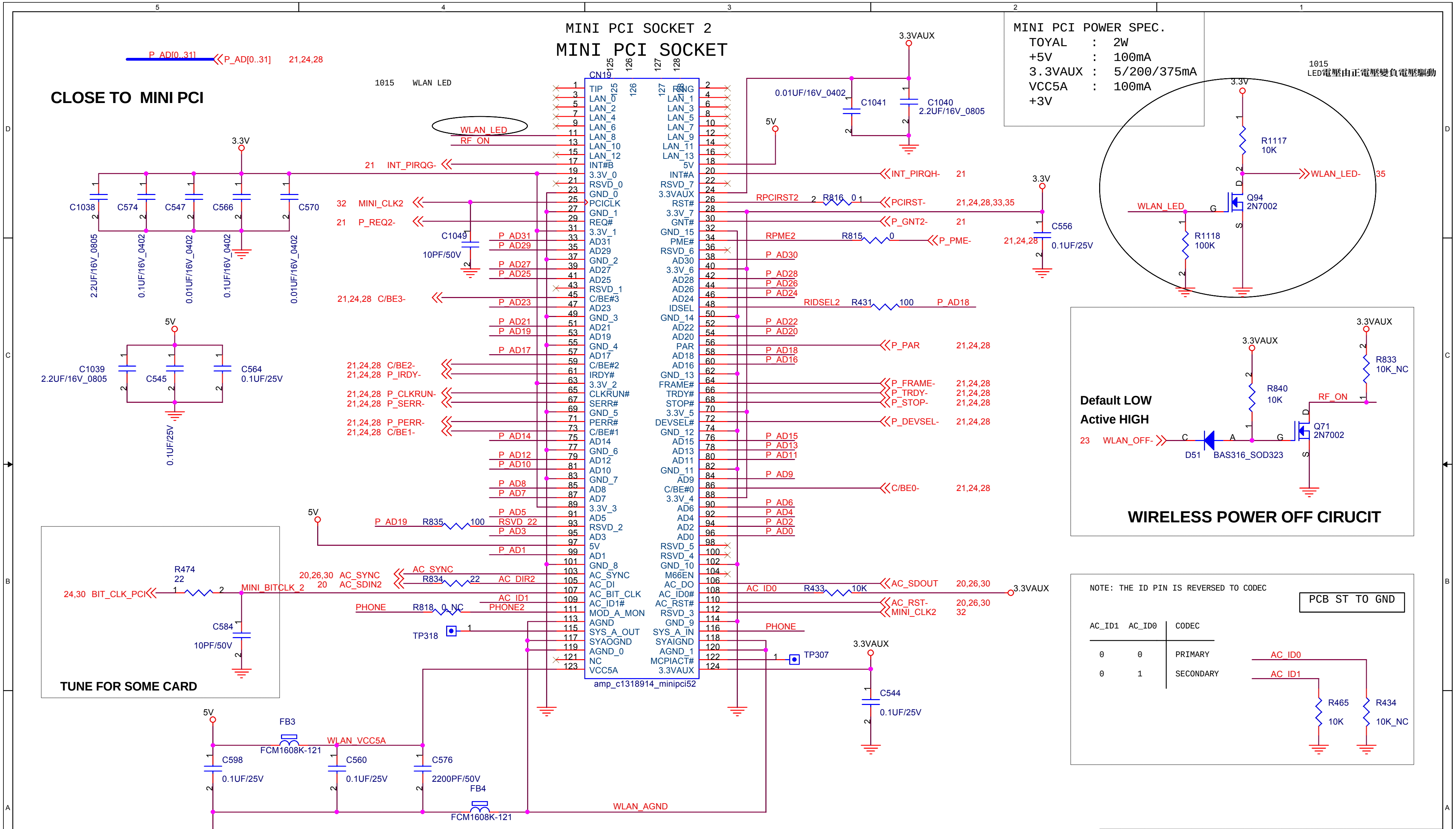

MINI PCI SOCKET 2
MINI PCI SOCKET
CN19
CLOSE TO MINI PCI
P_AD[0..31]
P_AD[0..31] 21,24,28
1015 WLAN LED
WLAN_LED
RF_ON
3.3V
21 INT_PIRQG-
C1038 C574 C547 C566 C570
2.2UF/16V_0805
0.1UF/16V_0402
0.01UF/16V_0402
0.1UF/16V_0402
0.01UF/16V_0402
32 MINI_CLK2
21 P_REQ2-
C1049
10PF/50V
21,24,28 C/BE3-
5V
C1039
2.2UF/16V_0805
C545
C564
0.1UF/25V
0.1UF/25V
21,24,28 C/BE2-
21,24,28 P_IRDY-
21,24,28 P_CLKRUN-
21,24,28 P_SERR-
21,24,28 P_PERR-
21,24,28 C/BE1-
P_AD31 P_AD29 P_AD27 P_AD25 P_AD23 P_AD21 P_AD19 P_AD17 P_AD14 P_AD12 P_AD10 P_AD8 P_AD7 P_AD5 P_AD3 P_AD1
P_AD19 R835 100 RSVD_22
TIP LAN_0 LAN_2 LAN_4 LAN_6 LAN_8 LAN_10 LAN_12 INT#B 3.3V_0 RSVD_0 GND_0 PCICLK GND_1 REQ# 3.3V_1 AD31 AD29 GND_2 AD27 AD25 RSVD_1 C/BE#3 AD23 GND_3 AD21 AD19 GND_4 AD17 C/BE#2 IRDY# 3.3V_2 CLKRUN# SERR# GND_5 PERR# C/BE#1 AD14 GND_6 AD12 AD10 GND_7 AD8 AD7 3.3V_3 AD5 RSVD_2 AD3 5V AD1 GND_8 AC_SYNC AC_DI AC_BIT_CLK AC_ID1# MOD_A_MON AGND SYS_A_OUT SYAOGND AGND_0 NC VCC5A
RING LAN_1 LAN_3 LAN_5 LAN_7 LAN_9 LAN_11 LAN_13 5V INT#A RSVD_7 3.3VAUX RST# 3.3V_7 GNT# GND_15 PME# RSVD_6 AD30 3.3V_6 AD28 AD26 AD24 IDSEL GND_14 AD22 AD20 PAR AD18 AD16 GND_13 FRAME# TRDY# STOP# 3.3V_5 DEVSEL# GND_12 AD15 AD13 AD11 GND_11 AD9 C/BE#0 3.3V_4 AD6 AD4 AD2 AD0 RSVD_5 RSVD_4 GND_10 M66EN AC_DO AC_ID0# AC_RST# RSVD_3 GND_9 SYS_A_IN SYAIGND AGND_1 MCPIACT# 3.3VAUX
amp_c1318914_minipci52
3.3VAUX
0.01UF/16V_0402
C1041
C1040
2.2UF/16V_0805
INT_PIRQH- 21
RPCIRST2 R816 0
PCIRST- 21,24,28,33,35
P_GNT2- 21
3.3V
C556
0.1UF/25V
21,24,28
RPME2 R815 0
P_PME-
P_AD30 P_AD28 P_AD26 P_AD24
RIDSEL2 R431 100 P_AD18
P_AD22 P_AD20
P_PAR 21,24,28
P_AD18 P_AD16
P_FRAME- 21,24,28
P_TRDY- 21,24,28
P_STOP- 21,24,28
P_DEVSEL- 21,24,28
P_AD15 P_AD13 P_AD11 P_AD9
C/BE0- 21,24,28
P_AD6 P_AD4 P_AD2 P_AD0
AC_ID0 R433 10K
AC_SDOUT 20,26,30
3.3VAUX
AC_RST- 20,26,30
MINI_CLK2 32
PHONE
TP307
3.3VAUX
C544
0.1UF/25V
R474
22
24,30 BIT_CLK_PCI
MINI_BITCLK_2
C584
10PF/50V
TUNE FOR SOME CARD
20,26,30 AC_SYNC
20 AC_SDIN2
AC_SYNC
R834 22 AC_DIR2
AC_ID1
PHONE R818 0_NC PHONE2
TP318
5V
FB3
FCM1608K-121
WLAN_VCCSA
C598 0.1UF/25V
C560 0.1UF/25V
C576 2200PF/50V
FB4
FCM1608K-121
WLAN_AGND
MINI PCI POWER SPEC.
TOYAL : 2W
+5V : 100mA
3.3VAUX : 5/200/375mA
VCC5A : 100mA
+3V
1015
LED電壓由正電壓變負電壓驅動
3.3V
R1117
10K
WLAN_LED- 35
WLAN_LED
Q94
2N7002
R1118
100K
3.3VAUX
3.3VAUX
R833
100K
10K_NC
R840
10K
RF_ON
Default LOW
Active HIGH
23 WLAN_OFF-
D51 BAS316_SOD323
Q71
2N7002
WIRELESS POWER OFF CIRUCIT
NOTE: THE ID PIN IS REVERSED TO CODEC
PCB ST TO GND
AC_ID1 AC_ID0 CODEC
0 0 PRIMARY
0 1 SECONDARY
AC_ID0
AC_ID1
R465 10K
R434 10K_NC

WLAN 802.11 a/b/g

Title	G600 MINI PCI 2	
Size B	Document Number G600-1-4-01	Rev 1.0
Date: Friday, September 02, 2005	Sheet 25 of 44	

Qcom MD560(B) BLUETOOTH/MODEM
COMBO CARD VER1A.FOR AZALIA

1	RESERVED	2	DETACH
3	GND	4	RESERVED
5	RESERVED	6	BT_ON#
7	RESERVED	8	GND
9	RESERVED	10	RESERVED
11	CHANNEL_CLK	12	USB+
13	CHANNEL_DATA	14	USB-
15	GND	16	RESERVED
17	3.3V/BT_VCC	18	WAKEUP
19	GND	20	GND
21	3.3V	22	SYNC
23	SDATA_OUT	24	SDATA_INTB
25	RESET#	26	SDATA_INTA
27	GND	28	GND
29	LED_DRIVER	30	BITCLK

Qcom MB011SL BLUETOOTH/MODEM
COMBO CARD VER3A.FOR AC97

1	MONO_OUT	2	DETACH
3	GND	4	MONO_PHONE
5	AUXA_RIGHT	6	BT_ON#
7	AUXA_LEFT	8	GND
9	CD_GND	10	5V
11	RESERVED	12	USB+
13	RESERVED	14	USB-
15	GND	16	PRIMARY_DN
17	3.3V/BT_VCC	18	WAKEUP
19	GND	20	GND
21	3.3V	22	SYNC
23	SDATA_OUT	24	SDATA_INTB
25	RESET#	26	SDATA_INTA
27	GND	28	GND
29	LED_DRIVER	30	BITCLK

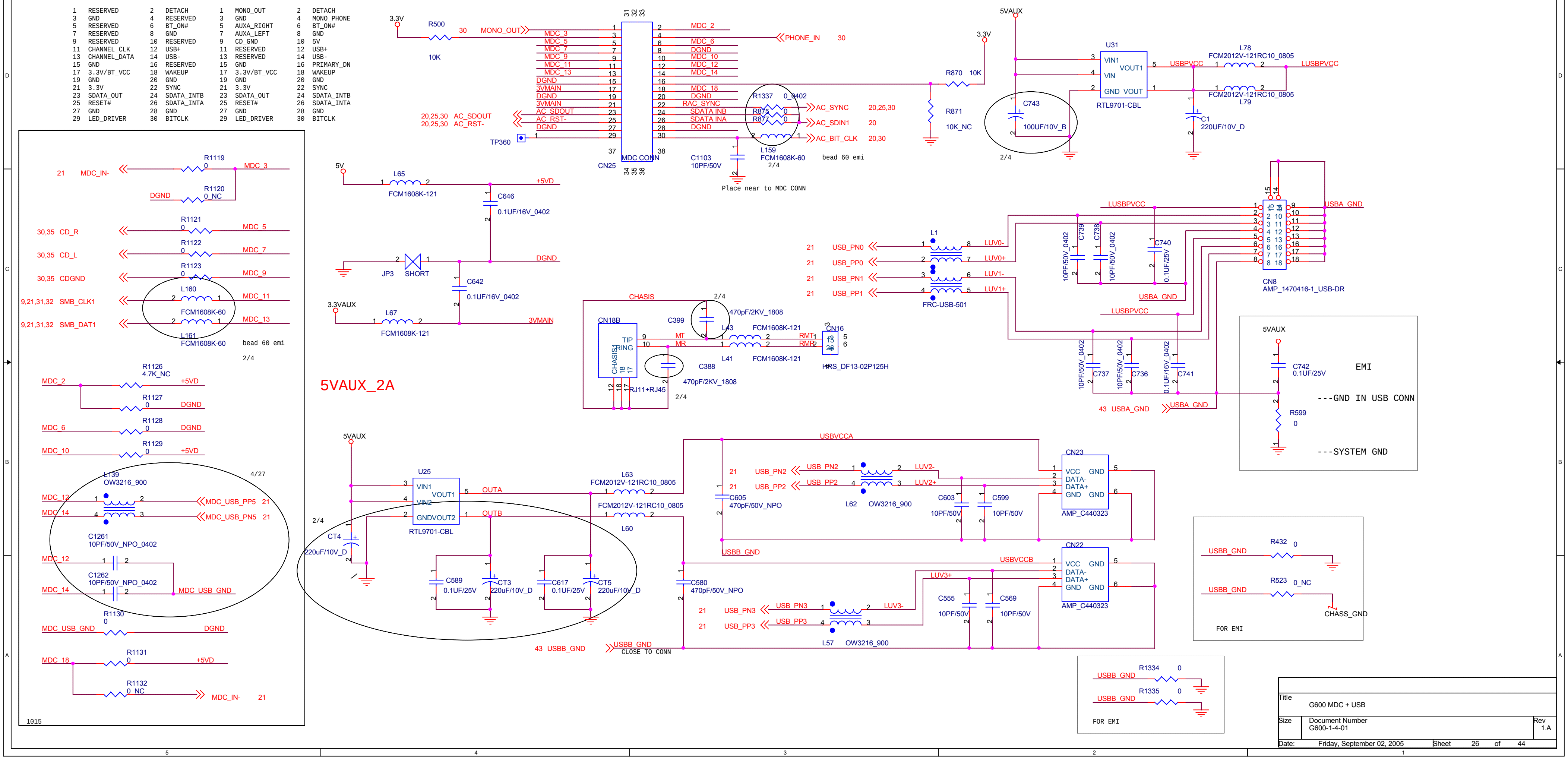
MDC
3.3V
R500
10K
30 MONO_OUT
MDC_3
MDC_5
MDC_7
MDC_9
MDC_11
MDC_13
DGND
3VMAIN
DGND
3VMAIN
AC_SDOUT
AC_RST-
DGND
20,25,30 AC_SDOUT
20,25,30 AC_RST-
TP360
MDC_2
PHONE_IN 30
MDC_6
DGND
MDC_10
MDC_12
MDC_14
MDC_18
DGND
RAC_SYNC
SDATA INB
SDATA INA
DGND
MDC CONN
CN25
R1337 0_0402
R875 0
R877 0
AC_SYNC 20,25,30
AC_SDIN1 20
AC_BIT_CLK 20,30
C1103
10PF/50V
L159
FCM1608K-60
2/4
bead 60 emi
Place near to MDC CONN
R870 10K
R871
10K_NC
5VAUX
C743
100UF/10V_B
2/4
U31
VIN1
VIN
GND
VOUT1
VOUT
RTL9701-CBL
USBPVCC
L78
FCM2012V-121RC10_0805
L79
LUSBPVCC
C1
220UF/10V_D
21 MDC_IN-
R1119 0
DGND
R1120 0_NC
30,35 CD_R
R1121 0
MDC_5
30,35 CD_L
R1122 0
MDC_7
30,35 CDGND
R1123 0
MDC_9
9,21,31,32 SMB_CLK1
L160
FCM1608K-60
MDC_11
9,21,31,32 SMB_DAT1
L161
FCM1608K-60
MDC_13
bead 60 emi
2/4
MDC_2
R1126
4.7K_NC
+5VD
R1127 0
DGND
MDC_6
R1128 0
DGND
MDC_10
R1129 0
+5VD
L139
OW3216_900
4/27
MDC_12
MDC_14
MDC_USB_PP5 21
MDC_USB_PN5 21
C1261
10PF/50V_NPO_0402
MDC_12
C1262
10PF/50V_NPO_0402
MDC_14
MDC_USB_GND
R1130 0
MDC_USB_GND
DGND
MDC_18
R1131 0
+5VD
R1132 0_NC
MDC_IN- 21
1015
5V
L65
FCM1608K-121
+5VD
C646
0.1UF/16V_0402
JP3
SHORT
DGND
C642
0.1UF/16V_0402
3.3VAUX
L67
FCM1608K-121
3VMAIN
5VAUX_2A
CHASIS
CN18B
TIP
RING
CHASIS
RJ11+RJ45
C399
470pF/2KV_1808
2/4
MT
MR
L43
FCM1608K-121
L41
FCM1608K-121
RMT
RMR
CN16
HRS_DF13-02P125H
C388
470pF/2KV_1808
2/4
21 USB_PN0
21 USB_PP0
21 USB_PN1
21 USB_PP1
L1
FRC-USB-501
LUV0-
LUV0+
LUV1-
LUV1+
LUSBPVCC
C739
C738
10PF/50V_0402
C740
0.1UF/25V
USBA_GND
LUSBPVCC
C737
C736
C741
10PF/50V_0402
0.1UF/16V_0402
43 USBA_GND
USBA_GND
CN8
AMP_1470416-1_USB-DR
5VAUX
C742
0.1UF/25V
EMI
---GND IN USB CONN
R599
0
---SYSTEM GND
5VAUX
U25
VIN1
VIN2
GNDVOUT2
VOUT1
RTL9701-CBL
OUTA
OUTB
CT4
220uF/10V_D
2/4
C589
0.1UF/25V
CT3
220uF/10V_D
C617
0.1UF/25V
CT5
220uF/10V_D
L63
FCM2012V-121RC10_0805
FCM2012V-121RC10_0805
L60
C580
470pF/50V_NPO
43 USBB_GND
USBB_GND
CLOSE TO CONN
USBVCCA
C605
470pF/50V_NPO
21 USB_PN2
21 USB_PP2
L62
OW3216_900
LUV2-
LUV2+
C603
10PF/50V
C599
10PF/50V
CN23
VCC
DATA-
DATA+
GND
AMP_C440323
USBB_GND
USBVCCB
LUV3+
LUV3-
C555
10PF/50V
C569
10PF/50V
CN22
AMP_C440323
21 USB_PN3
21 USB_PP3
L57
OW3216_900
USBB_GND
R432 0
USBB_GND
R523 0_NC
CHASS_GND
FOR EMI
USBB_GND
R1334 0
USBB_GND
R1335 0
FOR EMI

Title	G600 MDC + USB	
Size	Document Number G600-1-4-01	Rev 1.A
Date:	Friday, September 02, 2005	Sheet 26 of 44

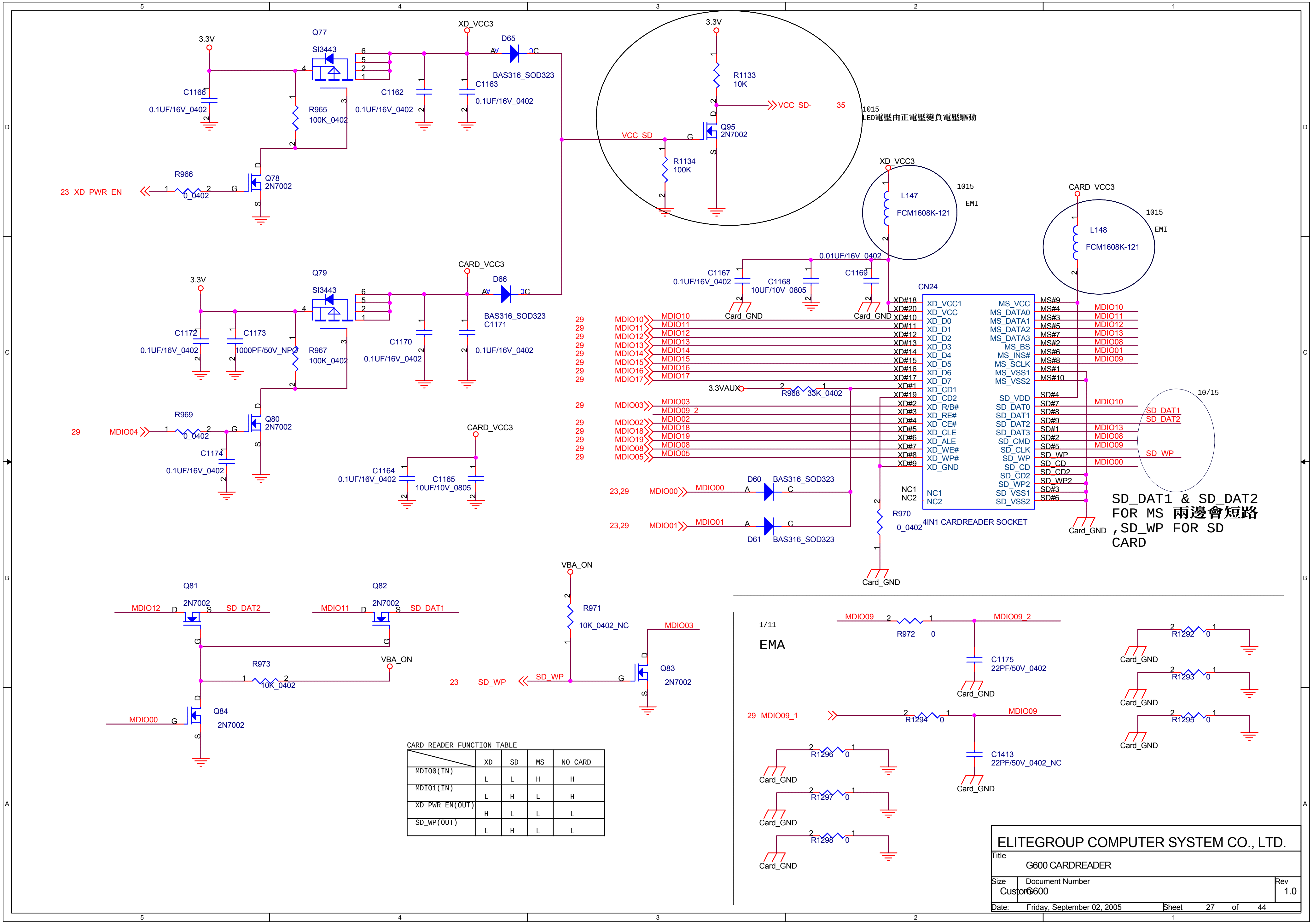
3.3V
Q77
SI3443
XD_VCC3
D65
BAS316_SOD323
C1166
0.1UF/16V_0402
R965
100K_0402
C1162
C1163
R966
23 XD_PWR_EN
0_0402
Q78
2N7002
3.3V
R1133
10K
VCC_SD-
35
1015
LED電壓由正電壓變負電壓驅動
VCC_SD
Q95
2N7002
R1134
100K
XD_VCC3
L147
FCM1608K-121
EMI
CARD_VCC3
L148
FCM1608K-121
Q79
SI3443
CARD_VCC3
D66
BAS316_SOD323
C1172
C1173
1000PF/50V_NPO
R967
100K_0402
C1170
C1171
R969
29 MDIO04
Q80
2N7002
C1174
C1164
C1165
10UF/10V_0805
C1167
C1168
C1169
0.01UF/16V_0402
Card_GND
CN24
XD_VCC1
XD_VCC
XD_D0
XD_D1
XD_D2
XD_D3
XD_D4
XD_D5
XD_D6
XD_D7
XD_CD1
XD_CD2
XD_R/B#
XD_RE#
XD_CE#
XD_CLE
XD_ALE
XD_WE#
XD_WP#
XD_GND
NC1
NC2
MS_VCC
MS_DATA0
MS_DATA1
MS_DATA2
MS_DATA3
MS_BS
MS_INS#
MS_SCLK
MS_VSS1
MS_VSS2
SD_VDD
SD_DAT0
SD_DAT1
SD_DAT2
SD_DAT3
SD_CMD
SD_CLK
SD_WP
SD_CD
SD_CD2
SD_WP2
SD_VSS1
SD_VSS2
4IN1 CARDREADER SOCKET
MDIO10
MDIO11
MDIO12
MDIO13
MDIO14
MDIO15
MDIO16
MDIO17
MDIO03
MDIO09_2
MDIO02
MDIO18
MDIO19
MDIO08
MDIO05
3.3VAUX
R968
33K_0402
D60
D61
BAS316_SOD323
23,29 MDIO00
23,29 MDIO01
R970
0_0402
10/15
SD_DAT1 & SD_DAT2 FOR MS 兩邊會短路 ,SD_WP FOR SD CARD
Q81
2N7002
MDIO12
SD_DAT2
Q82
2N7002
MDIO11
SD_DAT1
R973
10K_0402
VBA_ON
Q84
2N7002
MDIO00
VBA_ON
R971
10K_0402_NC
MDIO03
23 SD_WP
Q83
2N7002
1/11
EMA
MDIO09
R972
0
MDIO09_2
C1175
22PF/50V_0402
29 MDIO09_1
R1294
C1413
22PF/50V_0402_NC
R1292
R1293
R1295
R1296
R1297
R1298

CARD READER FUNCTION TABLE

	XD	SD	MS	NO CARD
MDIO0(IN)	L	L	H	H
MDIO1(IN)	L	H	L	H
XD_PWR_EN(OUT)	H	L	L	L
SD_WP(OUT)	L	H	L	L

ELITEGROUP COMPUTER SYSTEM CO., LTD.

Title
G600 CARDREADER

Size Custom
Document Number G600
Rev 1.0

Date: Friday, September 02, 2005
Sheet 27 of 44

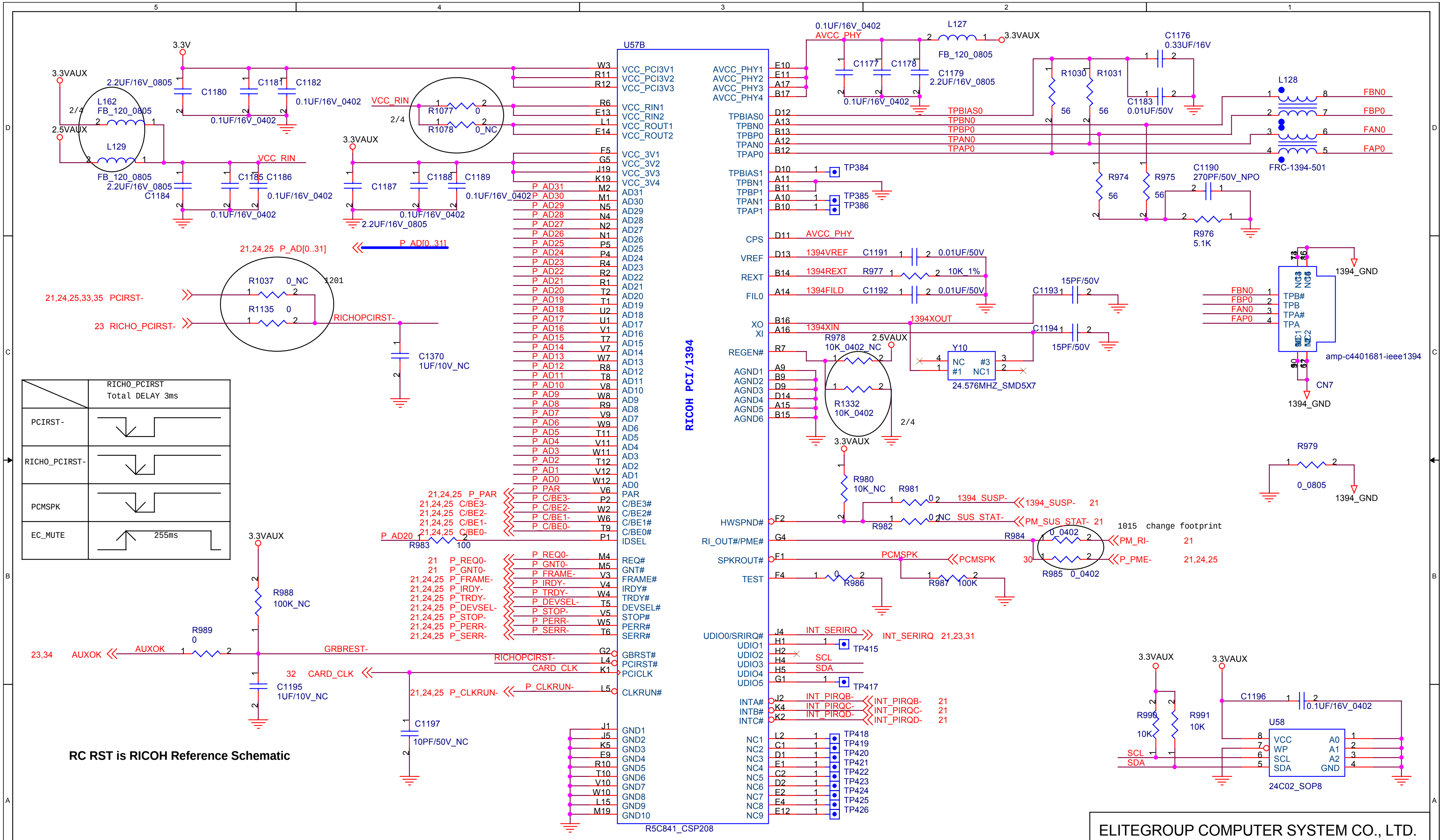
3.3V
3.3VAUX
2.5VAUX
L162
FB_120_0805
2/4
L129
FB_120_0805
2.2UF/16V_0805
C1184
C1180
C1181
C1182
0.1UF/16V_0402
C1185
C1186
VCC_RIN
C1187
C1188
C1189
2.2UF/16V_0805
R1077
0
R1078
0_NC
U57B
W3
R11
R12
R6
E13
L1
E14
F5
G5
J19
K19
VCC_PCI3V1
VCC_PCI3V2
VCC_PCI3V3
VCC_RIN1
VCC_RIN2
VCC_ROUT1
VCC_ROUT2
VCC_3V1
VCC_3V2
VCC_3V3
VCC_3V4
21,24,25 P_AD[0..31]
P_AD[0..31]
P_AD31 M2 AD31
P_AD30 M1 AD30
P_AD29 N5 AD29
P_AD28 N4 AD28
P_AD27 N2 AD27
P_AD26 N1 AD26
P_AD25 P5 AD25
P_AD24 P4 AD24
P_AD23 R4 AD23
P_AD22 R2 AD22
P_AD21 R1 AD21
P_AD20 T2 AD20
P_AD19 T1 AD19
P_AD18 U2 AD18
P_AD17 U1 AD17
P_AD16 V1 AD16
P_AD15 T7 AD15
P_AD14 V7 AD14
P_AD13 W7 AD13
P_AD12 R8 AD12
P_AD11 T8 AD11
P_AD10 V8 AD10
P_AD9 W8 AD9
P_AD8 R9 AD8
P_AD7 V9 AD7
P_AD6 W9 AD6
P_AD5 T11 AD5
P_AD4 V11 AD4
P_AD3 W11 AD3
P_AD2 T12 AD2
P_AD1 V12 AD1
P_AD0 W12 AD0
21,24,25 P_PAR V6 PAR
21,24,25 C/BE3- P2 C/BE3#
21,24,25 C/BE2- W2 C/BE2#
21,24,25 C/BE1- W6 C/BE1#
21,24,25 C/BE0- T9 C/BE0#
P_AD20 R983 100 P1 IDSEL
21 P_REQ0- M4 REQ#
21 P_GNT0- M5 GNT#
21,24,25 P_FRAME- V3 FRAME#
21,24,25 P_IRDY- V4 IRDY#
21,24,25 P_TRDY- W4 TRDY#
21,24,25 P_DEVSEL- T5 DEVSEL#
21,24,25 P_STOP- V5 STOP#
21,24,25 P_PERR- W5 PERR#
21,24,25 P_SERR- T6 SERR#
21,24,25,33,35 PCIRST-
23 RICHO_PCIRST-
R1037 0_NC
R1135 0
1201
RICHOPCIRST-
C1370
1UF/10V_NC
RICHO_PCIRST
Total DELAY 3ms
PCIRST-
RICHO_PCIRST-
PCMSPK
EC_MUTE
255ms
R988
100K_NC
R989
0
23,34 AUXOK
AUXOK
GRBREST-
G2 GBRST#
RICHOPCIRST- L4 PCIRST#
32 CARD_CLK
CARD_CLK K1 PCICLK
21,24,25 P_CLKRUN-
P_CLKRUN- L5 CLKRUN#
C1195
1UF/10V_NC
C1197
10PF/50V_NC
RC RST is RICOH Reference Schematic
J1 GND1
J5 GND2
K5 GND3
F9 GND4
R10 GND5
T10 GND6
V10 GND7
W10 GND8
L15 GND9
M19 GND10
R5C841_CSP208
RICOH PCI/1394
0.1UF/16V_0402
AVCC_PHY
L127
FB_120_0805
C1177
C1178
C1179
2.2UF/16V_0805
AVCC_PHY1 E10
AVCC_PHY2 E11
AVCC_PHY3 A17
AVCC_PHY4 B17
TPBIAS0 D12
TPBN0 A13
TPBP0 B13
TPAN0 A12
TPAP0 B12
TPBIAS1 D10
TPBN1 A11
TPBP1 B11
TPAN1 A10
TPAP1 B10
TP384
TP385
TP386
CPS D11
VREF D13
REXT B14
FILO A14
XO B16
XI A16
REGEN# R7
AGND1 A9
AGND2 B9
AGND3 D9
AGND4 D14
AGND5 A15
AGND6 B15
1394VREF C1191 0.01UF/50V
1394REXT R977 10K_1%
1394FILD C1192 0.01UF/50V
1394XIN
1394XOUT
C1193 15PF/50V
C1194 15PF/50V
R978 10K_0402_NC
2.5VAUX
Y10
NC #3
#1 NC1
24.576MHZ_SMD5X7
R1332 10K_0402
2/4
C1176
0.33UF/16V
R1030
R1031
56
C1183
0.01UF/50V
L128
FRC-1394-501
FBN0
FBP0
FAN0
FAP0
R974
R975
C1190
270PF/50V_NPO
R976
5.1K
1394_GND
TPB#
TPB
TPA#
TPA
NC3
NC4
NC5
NC6
NC1
NC2
amp-c4401681-ieee1394
CN7
R979
0_0805
R980
10K_NC
R981
0
1394_SUSP-
1394_SUSP- 21
R982
0_NC
SUS_STAT-
PM_SUS_STAT- 21
1015 change footprint
HWSPND# F2
RI_OUT#/PME# G4
R984
0_0402
PM_RI- 21
SPKROUT# F1
PCMSPK
PCMSPK 30
R985 0_0402
P_PME- 21,24,25
TEST F4
R986
0
R987 100K
UDIO0/SRIRQ# J4
INT_SERIRQ
INT_SERIRQ 21,23,31
UDIO1 H1
TP415
UDIO2 H2
UDIO3 H4 SCL
UDIO4 H5 SDA
UDIO5 G1
TP417
INTA# J2 INT_PIRQB-
INTB# K4 INT_PIRQC-
INTC# K2 INT_PIRQD-
INT_PIRQB- 21
INT_PIRQC- 21
INT_PIRQD- 21
NC1 L2 TP418
NC2 C1 TP419
NC3 D1 TP420
NC4 E1 TP421
NC5 C2 TP422
NC6 D2 TP423
NC7 E2 TP424
NC8 F4 TP425
NC9 E12 TP426
R990
10K
R991
10K
C1196
0.1UF/16V_0402
U58
VCC A0
WP A1
SCL A2
SDA GND
24C02_SOP8

ELITEGROUP COMPUTER SYSTEM CO., LTD.

Title	G600 1394_RICOH(R5C841)	
Size B	Document Number G600	Rev 1.0
Date: Friday, September 02, 2005	Sheet 28 of 44	

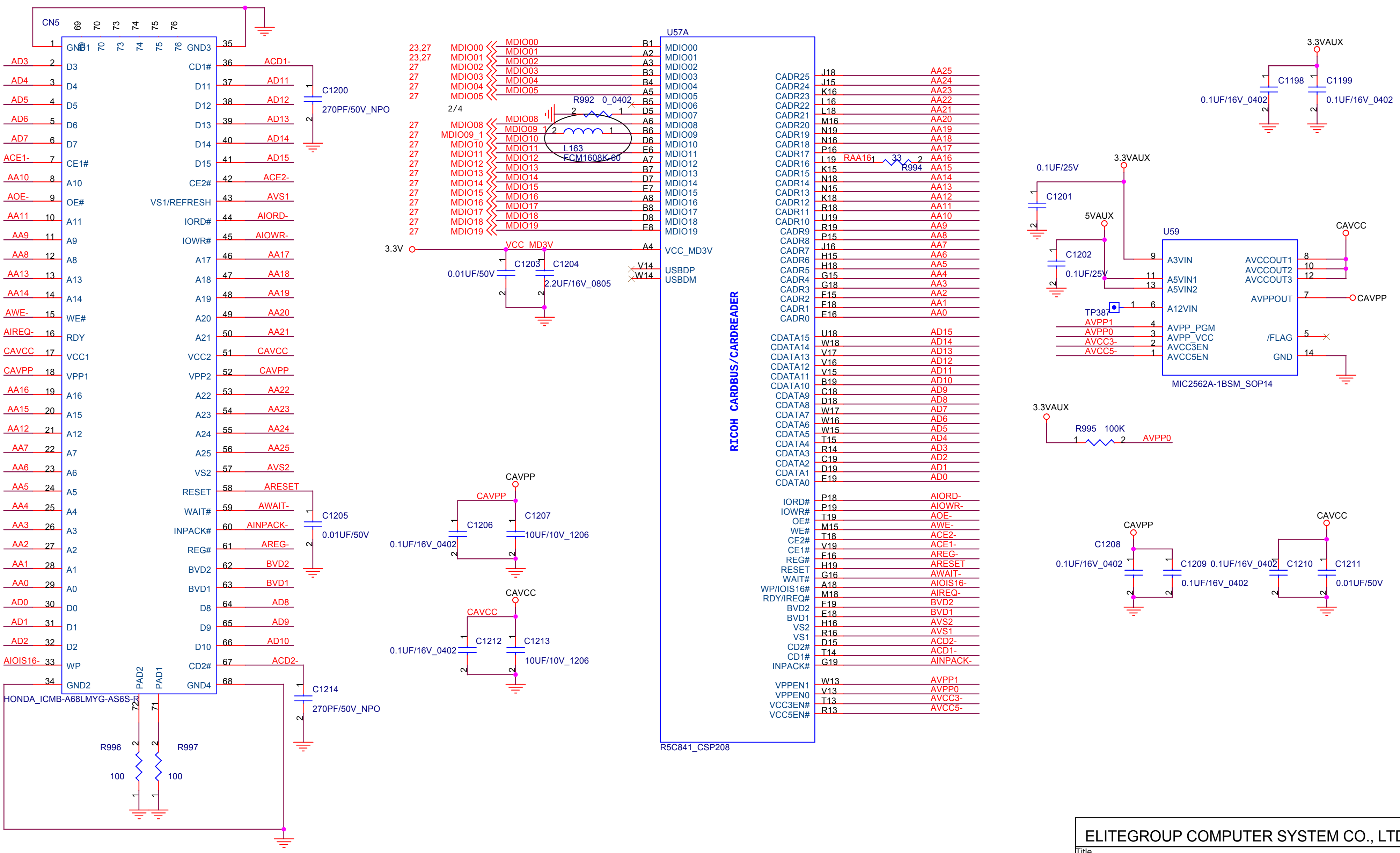
CN5
69 70 73 74 75 76
1 GND1
AD3 2 D3
AD4 3 D4
AD5 4 D5
AD6 5 D6
AD7 6 D7
ACE1- 7 CE1#
AA10 8 A10
AOE- 9 OE#
AA11 10 A11
AA9 11 A9
AA8 12 A8
AA13 13 A13
AA14 14 A14
AWE- 15 WE#
AIREQ- 16 RDY
CAVCC 17 VCC1
CAVPP 18 VPP1
AA16 19 A16
AA15 20 A15
AA12 21 A12
AA7 22 A7
AA6 23 A6
AA5 24 A5
AA4 25 A4
AA3 26 A3
AA2 27 A2
AA1 28 A1
AA0 29 A0
AD0 30 D0
AD1 31 D1
AD2 32 D2
AIOIS16- 33 WP
34 GND2
GND3 35
CD1# 36 ACD1-
D11 37 AD11
D12 38 AD12
D13 39 AD13
D14 40 AD14
D15 41 AD15
CE2# 42 ACE2-
VS1/REFRESH 43 AVS1
IORD# 44 AIORD-
IOWR# 45 AIOWR-
A17 46 AA17
A18 47 AA18
A19 48 AA19
A20 49 AA20
A21 50 AA21
VCC2 51 CAVCC
VPP2 52 CAVPP
A22 53 AA22
A23 54 AA23
A24 55 AA24
A25 56 AA25
VS2 57 AVS2
RESET 58 ARESET
WAIT# 59 AWAIT-
INPACK# 60 AINPACK-
REG# 61 AREG-
BVD2 62 BVD2
BVD1 63 BVD1
D8 64 AD8
D9 65 AD9
D10 66 AD10
CD2# 67 ACD2-
GND4 68
PAD2 PAD1
72 71
HONDA_ICMB-A68LMYG-AS6S-R
R996 100
R997 100
C1200 270PF/50V_NPO
C1205 0.01UF/50V
C1214 270PF/50V_NPO
U57A
23,27 MDIO00 MDIO00 B1 MDIO00
23,27 MDIO01 MDIO01 A2 MDIO01
27 MDIO02 MDIO02 A3 MDIO02
27 MDIO03 MDIO03 B3 MDIO03
27 MDIO04 MDIO04 B4 MDIO04
27 MDIO05 MDIO05 A5 MDIO05
2/4
R992 0_0402
B5 MDIO06
D5 MDIO07
27 MDIO08 MDIO08 A6 MDIO08
27 MDIO09_1 MDIO09 B6 MDIO09
27 MDIO10 MDIO10 D6 MDIO10
27 MDIO11 MDIO11 E6 MDIO11
27 MDIO12 MDIO12 A7 MDIO12
27 MDIO13 MDIO13 B7 MDIO13
27 MDIO14 MDIO14 D7 MDIO14
27 MDIO15 MDIO15 E7 MDIO15
27 MDIO16 MDIO16 A8 MDIO16
27 MDIO17 MDIO17 B8 MDIO17
27 MDIO18 MDIO18 D8 MDIO18
27 MDIO19 MDIO19 E8 MDIO19
L163
FCM1608K-60
3.3V
VCC_MD3V A4 VCC_MD3V
C1203 0.01UF/50V
C1204 2.2UF/16V_0805
V14 USBDP
W14 USBDM
RICOH CARDBUS/CARDREADER
CADR25 J18 AA25
CADR24 J15 AA24
CADR23 K16 AA23
CADR22 L16 AA22
CADR21 L18 AA21
CADR20 M16 AA20
CADR19 N19 AA19
CADR18 N16 AA18
CADR17 P16 AA17
CADR16 L19 RAA16 AA16
R994 33
CADR15 K15 AA15
CADR14 N18 AA14
CADR13 N15 AA13
CADR12 K18 AA12
CADR11 R18 AA11
CADR10 U19 AA10
CADR9 R19 AA9
CADR8 P15 AA8
CADR7 J16 AA7
CADR6 H15 AA6
CADR5 H18 AA5
CADR4 G15 AA4
CADR3 G18 AA3
CADR2 F15 AA2
CADR1 F18 AA1
CADR0 E16 AA0
CDATA15 U18 AD15
CDATA14 W18 AD14
CDATA13 V17 AD13
CDATA12 V16 AD12
CDATA11 V15 AD11
CDATA10 B19 AD10
CDATA9 C18 AD9
CDATA8 D18 AD8
CDATA7 W17 AD7
CDATA6 W16 AD6
CDATA5 W15 AD5
CDATA4 T15 AD4
CDATA3 R14 AD3
CDATA2 C19 AD2
CDATA1 D19 AD1
CDATA0 E19 AD0
IORD# P18 AIORD-
IOWR# P19 AIOWR-
OE# T19 AOE-
WE# M15 AWE-
CE2# T18 ACE2-
CE1# V19 ACE1-
REG# F16 AREG-
RESET H19 ARESET
WAIT# G16 AWAIT-
WP/IOIS16# A18 AIOIS16-
RDY/IREQ# M18 AIREQ-
BVD2 F19 BVD2
BVD1 E18 BVD1
VS2 H16 AVS2
VS1 R16 AVS1
CD2# D15 ACD2-
CD1# T14 ACD1-
INPACK# G19 AINPACK-
VPPEN1 W13 AVPP1
VPPEN0 V13 AVPP0
VCC3EN# T13 AVCC3-
VCC5EN# R13 AVCC5-
R5C841_CSP208
3.3VAUX
C1198 0.1UF/16V_0402
C1199 0.1UF/16V_0402
0.1UF/25V
C1201
3.3VAUX
5VAUX
C1202 0.1UF/25V
U59
9 A3VIN
11 A5VIN1
13 A5VIN2
TP387 6 A12VIN
AVPP1 4 AVPP_PGM
AVPP0 3 AVPP_VCC
AVCC3- 2 AVCC3EN
AVCC5- 1 AVCC5EN
AVCCOUT1 8
AVCCOUT2 10
AVCCOUT3 12
CAVCC
AVPPOUT 7 CAVPP
/FLAG 5
GND 14
MIC2562A-1BSM_SOP14
3.3VAUX
R995 100K
AVPP0
CAVPP
C1206 0.1UF/16V_0402
C1207 10UF/10V_1206
CAVCC
C1212 0.1UF/16V_0402
C1213 10UF/10V_1206
CAVPP
C1208 0.1UF/16V_0402
C1209 0.1UF/16V_0402
CAVCC
C1210 0.1UF/16V_0402
C1211 0.01UF/50V

ELITEGROUP COMPUTER SYSTEM CO., LTD.

Title	G600 CARDBUS/CARDREADER R5C841	
Size B	Document Number G600	Rev 1.0
Date: Friday, September 02, 2005	Sheet 29 of 44	

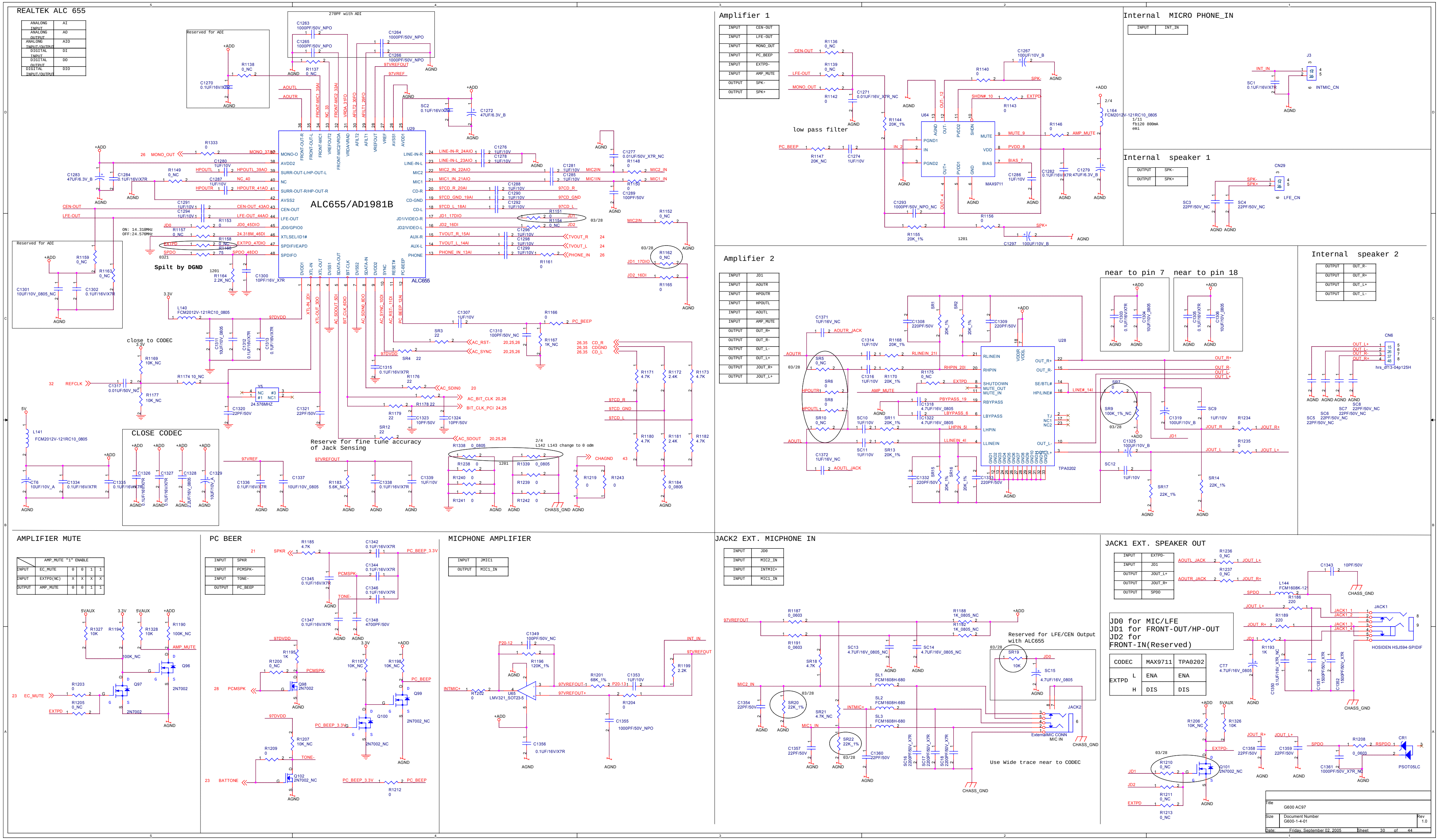
REALTEK ALC 655
ANALONG INPUT AI
ANALONG OUTPUT AO
ANALONG INPUT/OUTPUT AIO
DIGITAL INPUT DI
DIGITAL OUTPUT DO
DIGITAL INPUT/OUTPUT DIO
Reserved for ADI
270PF with ADI
ALC655/AD1981B
U29
ALC655
Spilt by DGND
close to CODEC
CLOSE CODEC
Reserve for fine tune accuracy of Jack Sensing
L142 L143 change to 0 odm
Amplifier 1
low pass filter
U64
MAX9711
Internal MICRO PHONE_IN
INTMIC_CN
Internal speaker 1
LFE_CN
Amplifier 2
U28
TPA0202
near to pin 7
near to pin 18
Internal speaker 2
hrs_df13-04p125H
AMPLIFIER MUTE
AMP_MUTE "1" ENABLE
PC BEER
MICPHONE AMPLIFIER
U65
LMV321_SOT23-5
JACK2 EXT. MICPHONE IN
Reserved for LFE/CEN Output with ALC655
Use Wide trace near to CODEC
External MIC CONN MIC IN
JACK1 EXT. SPEAKER OUT
HOSIDEN HSJ594-SPIDIF
JD0 for MIC/LFE
JD1 for FRONT-OUT/HP-OUT
JD2 for FRONT-IN(Reserved)
CODEC MAX9711 TPA0202
EXTPD L ENA ENA
H DIS DIS
PSOT05LC

Title G600 AC97

Size Document Number G600-1-4-01 Rev 1.0

Date: Friday, September 02, 2005 Sheet 30 of 44

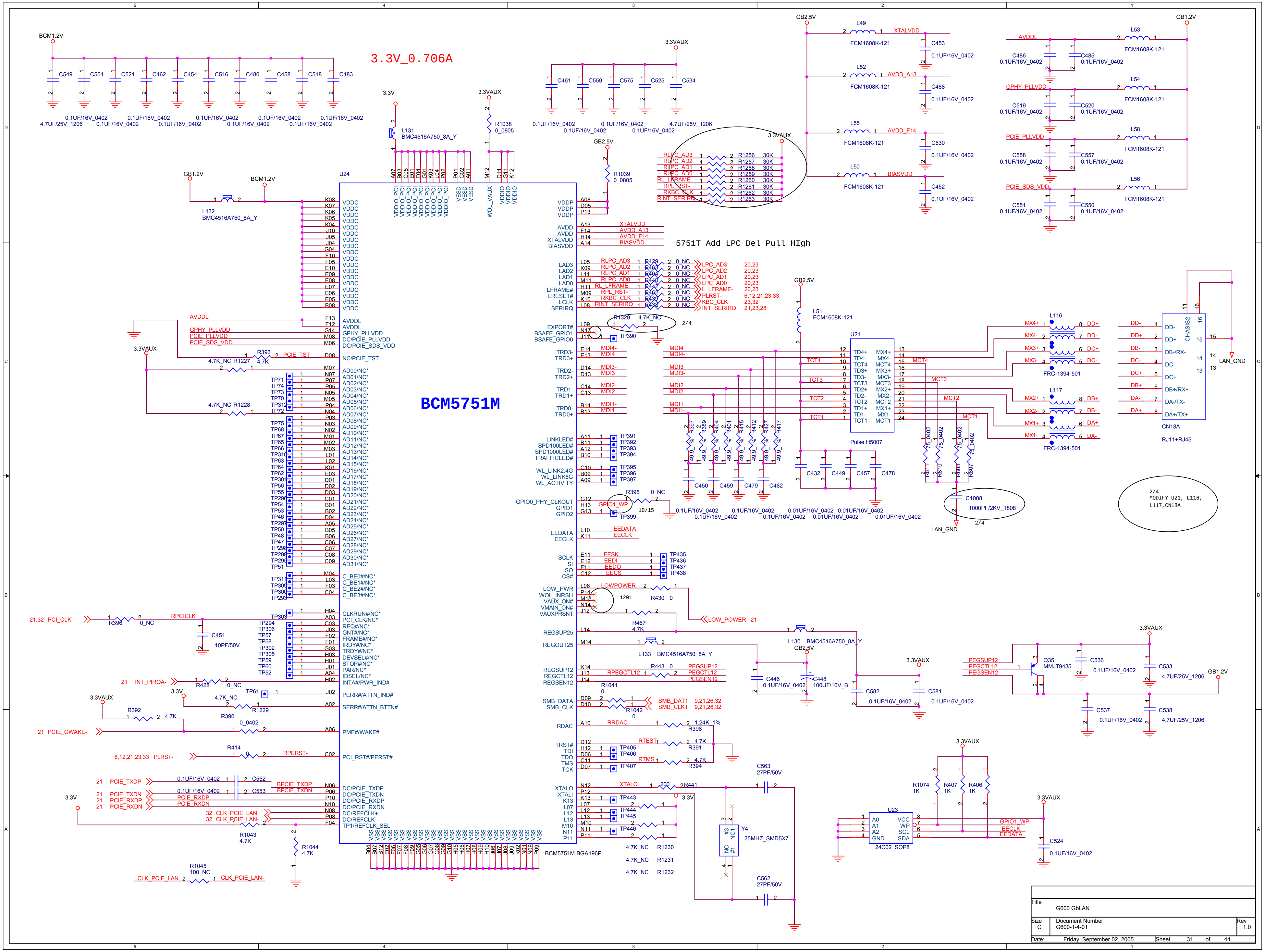
3.3V_0.706A
BCM1.2V
C549 C554 C521 C462 C454 C516 C480 C458 C518 C483
4.7UF/25V_1206
0.1UF/16V_0402
3.3V
3.3VAUX
L131 BMC4516A750_8A_Y
R1038 0_0805
C461 C559 C575 C525 C534
4.7UF/25V_1206
GB2.5V
R1039 0_0805
GB1.2V
L132 BMC4516A750_8A_Y
U24
BCM5751M
BCM5751M BGA196P
VDDC
VDDIO_PCI
VESD
WOL_VAUX
VDDIO
VDDP
AVDD
XTALVDD
BIASVDD
AVDDL
GPHY_PLLVDD
PCIE_PLLVDD
PCIE_SDS_VDD
NC/PCIE_TST
R393 4.7K
4.7K_NC R1227
4.7K_NC R1228
PCIE_TST
AD00/NC* … AD31/NC*
C_BE0#/NC* C_BE1#/NC* C_BE2#/NC* C_BE3#/NC*
CLKRUN#/NC*
PCI_CLK/NC*
REQ#/NC*
GNT#/NC*
FRAME#/NC*
IRDY#/NC*
TRDY#/NC*
DEVSEL#/NC*
STOP#/NC*
PAR/NC*
IDSEL/NC*
INTA#/PWR_IND#
PERR#/ATTN_IND#
SERR#/ATTN_BTTN#
PME#/WAKE#
PCI_RST#/PERST#
DC/PCIE_TXDP
DC/PCIE_TXDN
DC/PCIE_RXDP
DC/PCIE_RXDN
DC/REFCLK+
DC/REFCLK-
TP1/REFCLK_SEL
21,32 PCI_CLK
R396 0_NC
RPCICLK
C451 10PF/50V
21 INT_PIRQA-
R428 0_NC
TP61
4.7K_NC R1229
R392 4.7K
R390 0_0402
21 PCIE_GWAKE-
R414
6,12,21,23,33 PLRST-
RPERST-
21 PCIE_TXDP
21 PCIE_TXDN
21 PCIE_RXDP
21 PCIE_RXDN
C552 C553
BPCIE_TXDP
BPCIE_TXDN
PCIE_RXDP
PCIE_RXDN
32 CLK_PCIE_LAN
32 CLK_PCIE_LAN-
R1043 4.7K
R1044 4.7K
R1045 100_NC
CLK_PCIE_LAN
CLK_PCIE_LAN-
XTALVDD
AVDD_A13
AVDD_F14
BIASVDD
LAD3 LAD2 LAD1 LAD0
LFRAME#
LRESET#
LCLK
SERIRQ
RLPC_AD3 RLPC_AD2 RLPC_AD1 RLPC_AD0
RL_LFRAME-
RPL_RST-
RKBC_CLK
RINT_SERIRQ
R1256 R1257 R1258 R1259 R1260 R1261 R1262 R1263 30K
5751T Add LPC Del Pull HIgh
LPC_AD3 LPC_AD2 LPC_AD1 LPC_AD0
L_LFRAME-
PLRST-
KBC_CLK
INT_SERIRQ
20,23
6,12,21,23,33
23,32
21,23,28
0_NC
EXPORT#
BSAFE_GPIO1
BSAFE_GPIO0
R1329 4.7K_NC
2/4
TP390
TRD3- TRD3+ TRD2- TRD2+ TRD1- TRD1+ TRD0- TRD0+
MDI4 MDI4- MDI3 MDI3- MDI2 MDI2- MDI1 MDI1-
LINKLED#
SPD100LED#
SPD1000LED#
TRAFFICLED#
WL_LINK2.4G
WL_LINK5G
WL_ACTIVITY
GPIO0_PHY_CLKOUT
GPIO1
GPIO2
R395 0_NC
GPIO1_WP
10/15
TP399
EEDATA
EECLK
SCLK SI SO CS#
EESK EEDI EEDO EECS
TP435 TP436 TP437 TP438
LOW_PWR
WOL_INRSH
VAUX_ON#
VMAIN_ON#
VAUXPRSNT
LOWPOWER
1201
R430 0
R467 4.7K
LOW_POWER 21
REGSUP25
REGOUT25
L133 BMC4516A750_8A_Y
L130 BMC4516A750_8A_Y
REGSUP12
REGCTL12
REGSEN12
R443 0
RPEGCTL12
PEGSUP12
PEGCTL12
PEGSEN12
R1041 0
SMB_DATA
SMB_CLK
R1042 0
SMB_DAT1 9,21,26,32
SMB_CLK1 9,21,26,32
RDAC
RRDAC
R398 1.24K_1%
TRST# TDI TDO TMS TCK
RTEST
RTMS
R391 4.7K
R394 4.7K
XTALO XTALI
XTALO
R441 200
C563 27PF/50V
C562 27PF/50V
Y4 25MHZ_SMD5X7
4.7K_NC R1230
4.7K_NC R1231
4.7K_NC R1232
C446 0.1UF/16V_0402
C448 100UF/10V_B
C582 0.1UF/16V_0402
C581 0.1UF/16V_0402
Q35 MMJT9435
C536 0.1UF/16V_0402
C533 4.7UF/25V_1206
C537 0.1UF/16V_0402
C538 4.7UF/25V_1206
L49 L52 L55 L50 FCM1608K-121
C453 C488 C530 C452 0.1UF/16V_0402
L53 L54 L58 L56 FCM1608K-121
C486 C485 C519 C520 C558 C557 C551 C550 0.1UF/16V_0402
L51 FCM1608K-121
U21 Pulse H5007
TD4+ TD4- TCT4 TD3+ TD3- TCT3 TD2+ TD2- TCT2 TD1+ TD1- TCT1
MX4+ MX4- MCT4 MX3+ MX3- MCT3 MX2+ MX2- MCT2 MX1+ MX1- MCT1
R397 R389 R404 R401 R415 R412 R427 R417 49.9_1%
C450 C459 C479 C482
C432 C449 C457 C478
0.01UF/16V_0402
R811 R810 R808 R807 75_0402
C1008 1000PF/2KV_1808
LAN_GND
L116 FRC-1394-501
L117 FRC-1394-501
DD+ DD- DC+ DC- DB+ DB- DA+ DA-
CN18A RJ11+RJ45
DD- DD+ DB-/RX- DC- DC+ DB+/RX+ DA-/TX- DA+/TX+
CHASIS2
2/4 MODIFY U21, L116, L117,CN18A
U23 24C02_SOP8
A0 A1 A2 GND VCC WP SCL SDA
R1074 1K R407 1K R406 1K
GPIO1_WP-
EECLK
EEDATA
C524 0.1UF/16V_0402

Title
G600 GbLAN

Size C
Document Number G600-1-4-01
Rev 1.0

Date: Friday, September 02, 2005
Sheet 31 of 44

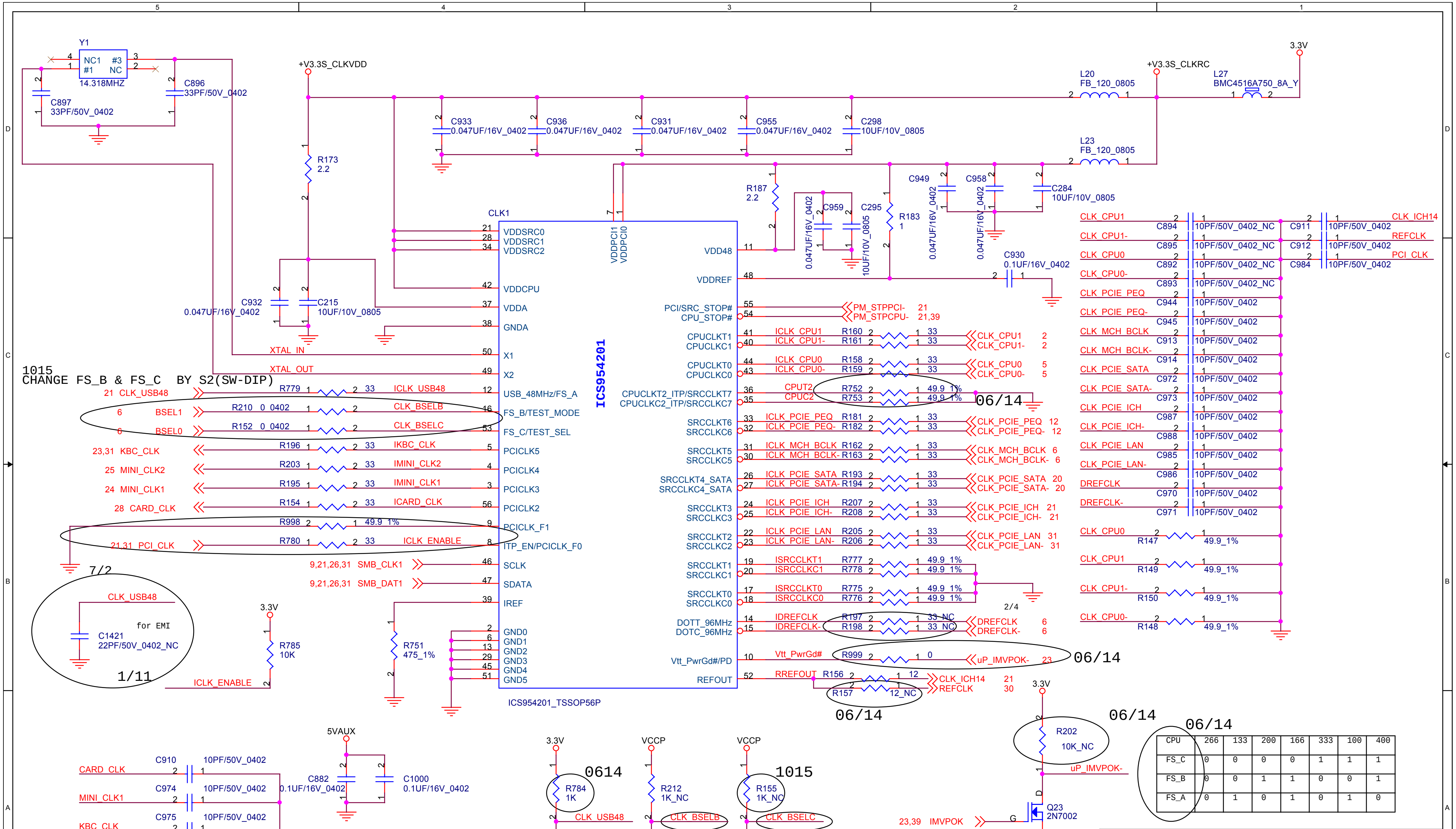

Y1
14.318MHZ
C896 33PF/50V_0402
C897 33PF/50V_0402
+V3.3S_CLKVDD
+V3.3S_CLKRC
3.3V
L20 FB_120_0805
L23 FB_120_0805
L27 BMC4516A750_8A_Y
R173 2.2
R187 2.2
R183 1
C933 0.047UF/16V_0402
C936 0.047UF/16V_0402
C931 0.047UF/16V_0402
C955 0.047UF/16V_0402
C298 10UF/10V_0805
C284 10UF/10V_0805
C930 0.1UF/16V_0402
C932 0.047UF/16V_0402
C215 10UF/10V_0805
CLK1
ICS954201
ICS954201_TSSOP56P
VDDSRC0
VDDSRC1
VDDSRC2
VDDCPU
VDDA
GNDA
X1
X2
USB_48MHz/FS_A
FS_B/TEST_MODE
FS_C/TEST_SEL
PCICLK5
PCICLK4
PCICLK3
PCICLK2
PCICLK_F1
ITP_EN/PCICLK_F0
SCLK
SDATA
IREF
GND0
GND1
GND2
GND3
GND4
GND5
VDDPCI1
VDDPCI0
VDD48
VDDREF
PCI/SRC_STOP#
CPU_STOP#
CPUCLKT1
CPUCLKC1
CPUCLKT0
CPUCLKC0
CPUCLKT2_ITP/SRCCLKT7
CPUCLKC2_ITP/SRCCLKC7
SRCCLKT6
SRCCLKC6
SRCCLKT5
SRCCLKC5
SRCCLKT4_SATA
SRCCLKC4_SATA
SRCCLKT3
SRCCLKC3
SRCCLKT2
SRCCLKC2
SRCCLKT1
SRCCLKC1
SRCCLKT0
SRCCLKC0
DOTT_96MHz
DOTC_96MHz
Vtt_PwrGd#/PD
REFOUT
XTAL_IN
XTAL_OUT
21 CLK_USB48
6 BSEL1
6 BSEL0
23,31 KBC_CLK
25 MINI_CLK2
24 MINI_CLK1
28 CARD_CLK
21,31 PCI_CLK
9,21,26,31 SMB_CLK1
9,21,26,31 SMB_DAT1
PM_STPPCI- 21
PM_STPCPU- 21,39
CLK_CPU1 2
CLK_CPU1- 2
CLK_CPU0 5
CLK_CPU0- 5
CLK_PCIE_PEQ 12
CLK_PCIE_PEQ- 12
CLK_MCH_BCLK 6
CLK_MCH_BCLK- 6
CLK_PCIE_SATA 20
CLK_PCIE_SATA- 20
CLK_PCIE_ICH 21
CLK_PCIE_ICH- 21
CLK_PCIE_LAN 31
CLK_PCIE_LAN- 31
DREFCLK 6
DREFCLK- 6
uP_IMVPOK- 23
CLK_ICH14 21
REFCLK 30
R785 10K
R751 475_1%
C1421 22PF/50V_0402_NC
for EMI
C910 10PF/50V_0402
C974 10PF/50V_0402
C975 10PF/50V_0402
C983 10PF/50V_0402
5VAUX
C882 0.1UF/16V_0402
C1000 0.1UF/16V_0402
R784 1K
R791 1K_NC
R212 1K_NC
R213 1K_NC
R155 1K_NC
R151 1K_NC
FS_A
FS_B
FS_C
R202 10K_NC
Q23 2N7002
23,39 IMVPOK
1015
7/2
1/11
06/14
0614

1015
CHANGE FS_B & FS_C BY S2(SW-DIP)

1015
CHANGE FS_B & FS_C BY S2(SW-DIP)

06/14

CPU	266	133	200	166	333	100	400
FS_C	0	0	0	0	1	1	1
FS_B	0	0	1	1	0	0	1
FS_A	0	1	0	1	0	1	0

Title
G600 CLOCK Generator

Size B
Document Number G600-1-4-01
Rev 1.0

Date: Friday, September 02, 2005
Sheet 32 of 44

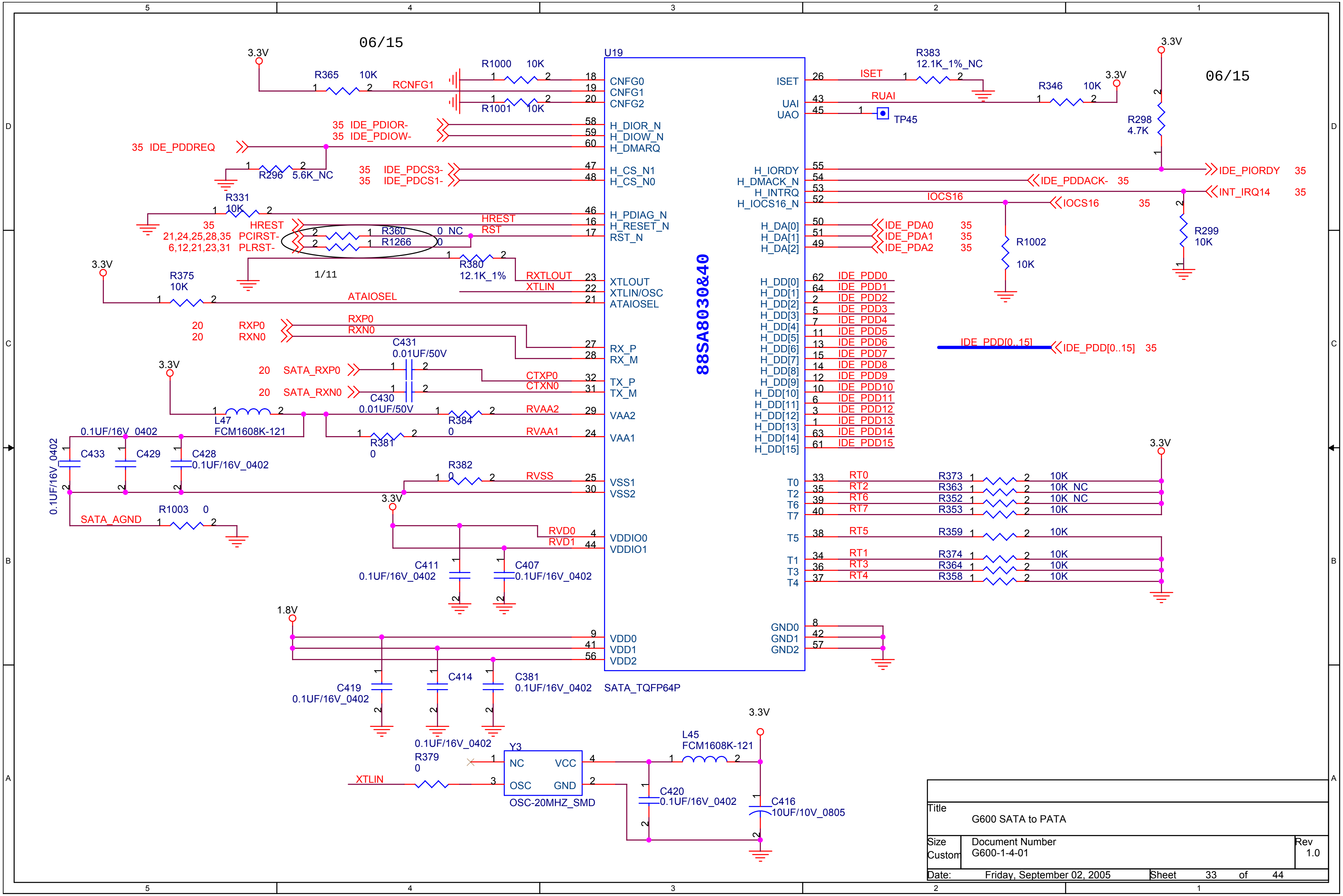
06/15
06/15
U19
88SA8030&40
SATA_TQFP64P
3.3V
R365 10K
RCNFG1
R1000 10K
R1001 10K
CNFG0
CNFG1
CNFG2
35 IDE_PDIOR-
35 IDE_PDIOW-
35 IDE_PDDREQ
H_DIOR_N
H_DIOW_N
H_DMARQ
R296 5.6K_NC
35 IDE_PDCS3-
35 IDE_PDCS1-
H_CS_N1
H_CS_N0
R331 10K
35 HREST
21,24,25,28,35 PCIRST-
6,12,21,23,31 PLRST-
HREST
RST
R360 0 NC
R1266 0
H_PDIAG_N
H_RESET_N
RST_N
R380 12.1K_1%
1/11
RXTLOUT
XTLIN
XTLOUT
XTLIN/OSC
R375 10K
ATAIOSEL
20 RXP0
20 RXN0
RX_P
RX_M
C431 0.01UF/50V
20 SATA_RXP0
20 SATA_RXN0
C430 0.01UF/50V
CTXP0
CTXN0
TX_P
TX_M
L47 FCM1608K-121
R384 0
RVAA2
VAA2
R381 0
RVAA1
VAA1
0.1UF/16V_0402
C433
C429
C428 0.1UF/16V_0402
0.1UF/16V_0402
R382 0
RVSS
VSS1
VSS2
SATA_AGND
R1003 0
RVD0
RVD1
VDDIO0
VDDIO1
C411 0.1UF/16V_0402
C407 0.1UF/16V_0402
1.8V
VDD0
VDD1
VDD2
C419 0.1UF/16V_0402
C414 0.1UF/16V_0402
C381 0.1UF/16V_0402
Y3
NC VCC
OSC GND
OSC-20MHZ_SMD
R379 0
XTLIN
L45 FCM1608K-121
C420 0.1UF/16V_0402
C416 10UF/10V_0805
ISET
R383 12.1K_1%_NC
UAI
UAO
RUAI
R346 10K
TP45
R298 4.7K
H_IORDY
H_DMACK_N
H_INTRQ
H_IOCS16_N
IDE_PIORDY 35
IDE_PDDACK- 35
INT_IRQ14 35
IOCS16
IOCS16 35
R1002 10K
R299 10K
H_DA[0] IDE_PDA0 35
H_DA[1] IDE_PDA1 35
H_DA[2] IDE_PDA2 35
H_DD[0] IDE_PDD0
H_DD[1] IDE_PDD1
H_DD[2] IDE_PDD2
H_DD[3] IDE_PDD3
H_DD[4] IDE_PDD4
H_DD[5] IDE_PDD5
H_DD[6] IDE_PDD6
H_DD[7] IDE_PDD7
H_DD[8] IDE_PDD8
H_DD[9] IDE_PDD9
H_DD[10] IDE_PDD10
H_DD[11] IDE_PDD11
H_DD[12] IDE_PDD12
H_DD[13] IDE_PDD13
H_DD[14] IDE_PDD14
H_DD[15] IDE_PDD15
IDE_PDD[0..15]
IDE_PDD[0..15] 35
T0 RT0 R373 10K
T2 RT2 R363 10K_NC
T6 RT6 R352 10K_NC
T7 RT7 R353 10K
T5 RT5 R359 10K
T1 RT1 R374 10K
T3 RT3 R364 10K
T4 RT4 R358 10K
GND0
GND1
GND2

Title
G600 SATA to PATA

Size
Custom

Document Number
G600-1-4-01

Rev
1.0

Date: Friday, September 02, 2005

Sheet 33 of 44

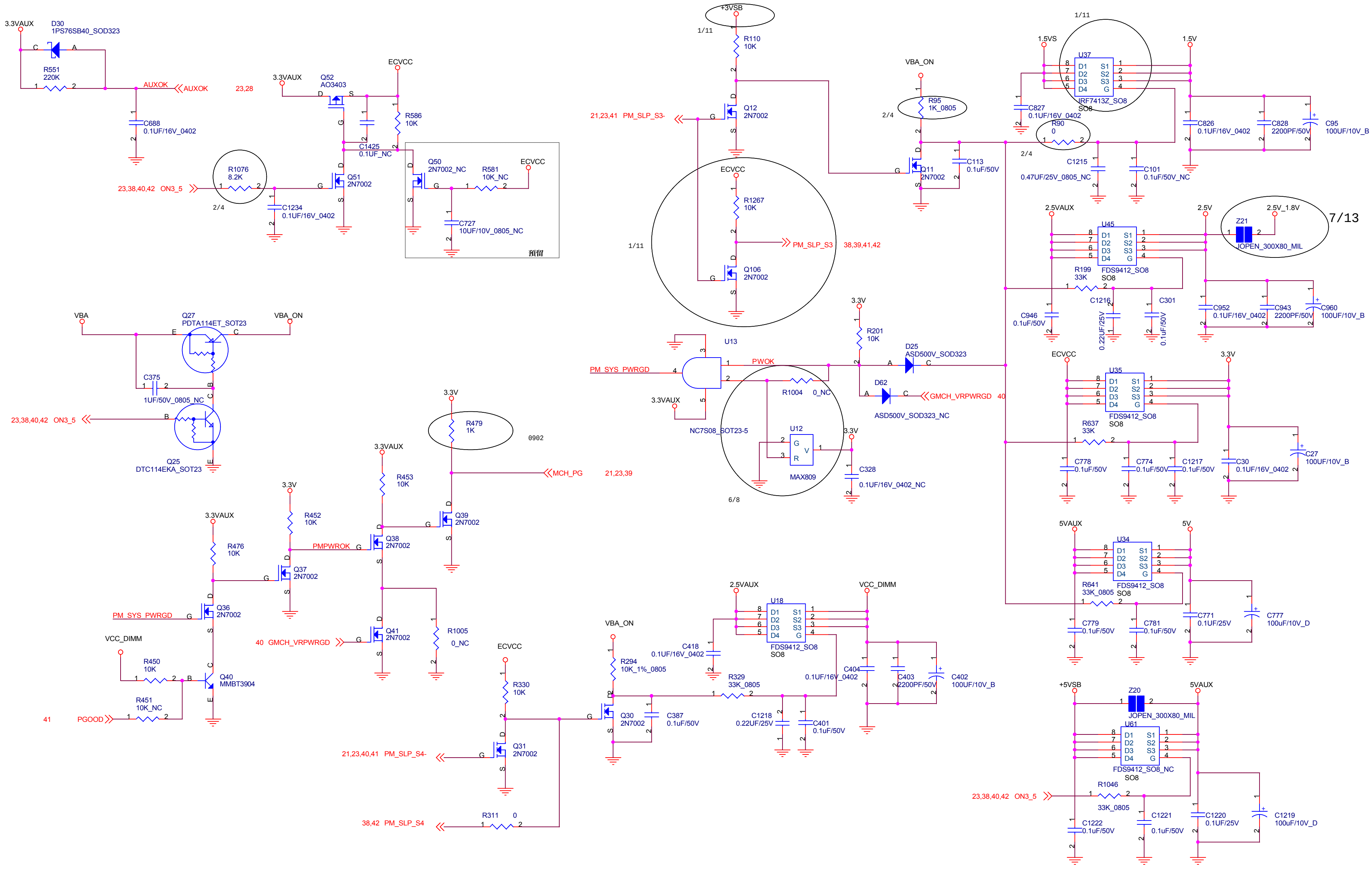
3.3VAUX
D30
1PS76SB40_SOD323
C
A
R551
220K
AUXOK
AUXOK
23,28
C688
0.1UF/16V_0402
3.3VAUX
Q52
AO3403
D
S
G
ECVCC
R586
10K
C1425
0.1UF_NC
R1076
8.2K
23,38,40,42 ON3_5
2/4
C1234
0.1UF/16V_0402
Q51
2N7002
Q50
2N7002_NC
R581
10K_NC
ECVCC
C727
10UF/10V_0805_NC
預留
+3VSB
1/11
R110
10K
21,23,41 PM_SLP_S3-
Q12
2N7002
ECVCC
R1267
10K
1/11
PM_SLP_S3
38,39,41,42
Q106
2N7002
VBA_ON
R95
1K_0805
2/4
Q11
2N7002
C113
0.1uF/50V
1/11
1.5VS
U37
D1 D2 D3 D4
S1 S2 S3 G
IRF7413Z_SO8
SO8
1.5V
C827
0.1UF/16V_0402
R90
0
2/4
C1215
0.47UF/25V_0805_NC
C101
0.1uF/50V_NC
C826
0.1UF/16V_0402
C828
2200PF/50V
C95
100UF/10V_B
2.5VAUX
U45
FDS9412_SO8
SO8
R199
33K
C1216
0.22UF/25V
C301
0.1uF/50V
C946
0.1uF/50V
2.5V
2.5V_1.8V
Z21
JOPEN_300X80_MIL
7/13
C952
0.1UF/16V_0402
C943
2200PF/50V
C960
100UF/10V_B
VBA
Q27
PDTA114ET_SOT23
VBA_ON
E
C
C375
1UF/50V_0805_NC
23,38,40,42 ON3_5
B
Q25
DTC114EKA_SOT23
U13
PM_SYS_PWRGD
PWOK
3.3VAUX
NC7S08_SOT23-5
R1004 0_NC
U12
MAX809
G
V
R
6/8
3.3V
C328
0.1UF/16V_0402_NC
3.3V
R201
10K
D25
ASD500V_SOD323
D62
ASD500V_SOD323_NC
GMCH_VRPWRGD 40
ECVCC
U35
FDS9412_SO8
SO8
R637
33K
C778
0.1uF/50V
C774
0.1uF/50V
C1217
0.1uF/50V
3.3V
C30
0.1UF/16V_0402
C27
100UF/10V_B
3.3V
R479
1K
0902
MCH_PG
21,23,39
3.3VAUX
R453
10K
Q39
2N7002
3.3V
R452
10K
PMPWROK
Q38
2N7002
3.3VAUX
R476
10K
Q37
2N7002
PM_SYS_PWRGD
Q36
2N7002
VCC_DIMM
R450
10K
Q40
MMBT3904
R451
10K_NC
41 PGOOD
40 GMCH_VRPWRGD
Q41
2N7002
R1005
0_NC
ECVCC
R330
10K
21,23,40,41 PM_SLP_S4-
Q31
2N7002
38,42 PM_SLP_S4
R311 0
VBA_ON
R294
10K_1%_0805
Q30
2N7002
C387
0.1uF/50V
2.5VAUX
U18
FDS9412_SO8
SO8
C418
0.1UF/16V_0402
R329
33K_0805
C1218
0.22UF/25V
C401
0.1uF/50V
VCC_DIMM
C404
0.1UF/16V_0402
C403
2200PF/50V
C402
100UF/10V_B
5VAUX
U34
FDS9412_SO8
SO8
5V
R641
33K_0805
C779
0.1uF/50V
C781
0.1uF/50V
C771
0.1UF/25V
C777
100uF/10V_D
+5VSB
Z20
JOPEN_300X80_MIL
5VAUX
U61
FDS9412_SO8_NC
SO8
23,38,40,42 ON3_5
R1046
33K_0805
C1222
0.1uF/50V
C1221
0.1uF/50V
C1220
0.1UF/25V
C1219
100uF/10V_D

Title
G600 MOS

Size | Document Number | Rev
G600-1-4-01 | 1.D

Date: Friday, September 02, 2005 Sheet 34 of 44

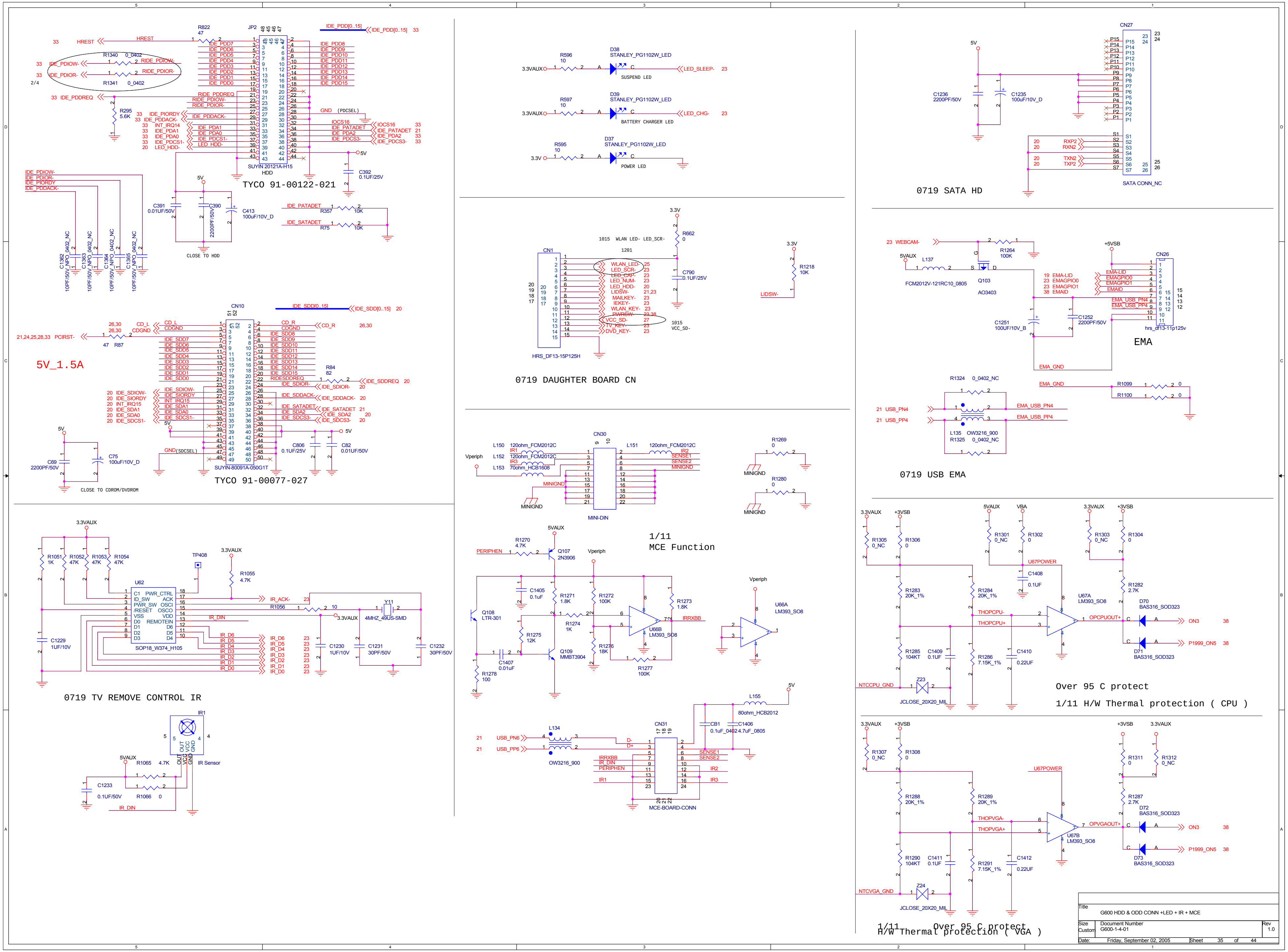
TYCO 91-00122-021
JP2
SUYIN 20121A-H15
HDD
R822 47
HREST
R1340 0_0402
R1341 0_0402
RIDE_PDIOW-
RIDE_PDIOR-
IDE_PDDREQ
R295 5.6K
IDE_PIORDY
IDE_PDDACK-
INT_IRQ14
IDE_PDA1
IDE_PDA0
IDE_PDCS1-
LED_HDD-
IDE_PDD[0..15]
IDE_PATADET
IDE_PDCS3-
IOCS16
C392 0.1UF/25V
C391 0.01UF/50V
C390 2200PF/50V
C413 100uF/10V_D
CLOSE TO HDD
R357 10K
R75 10K
IDE_SATADET
C1362 C1363 C1364 C1365 10PF/50V_NPO_0402_NC
TYCO 91-00077-027
CN10
SUYIN-80091A-050G1T
IDE_SDD[0..15]
CD_L
CD_R
CDGND
PCIRST-
R87 47
5V_1.5A
R84 82
IDE_SDDREQ
IDE_SDIOR-
IDE_SDDACK-
IDE_SATADET
IDE_SDA2
IDE_SDCS3-
IDE_SDIOW-
IDE_SIORDY
INT_IRQ15
IDE_SDA1
IDE_SDA0
IDE_SDCS1-
C69 2200PF/50V
C75 100uF/10V_D
C806 0.1UF/25V
C82 0.01UF/50V
CLOSE TO CDROM/DVDROM
GND(SDCSEL)
0719 TV REMOVE CONTROL IR
U62
SOP18_W374_H105
R1051 1K
R1052 47K
R1053 47K
R1054 47K
TP408
R1055 4.7K
R1056 10
Y11 4MHZ_49US-SMD
C1229 1UF/10V
C1230 1UF/10V
C1231 30PF/50V
C1232 30PF/50V
IR_ACK-
IR_DIN
IR_D6 IR_D5 IR_D4 IR_D3 IR_D2 IR_D1 IR_D0
IR1
IR Sensor
R1065 4.7K
R1066 0
C1233 0.1UF/50V
R596 10
D38 STANLEY_PG1102W_LED
SUSPEND LED
LED_SLEEP-
R597 10
D39 STANLEY_PG1102W_LED
BATTERY CHARGER LED
LED_CHG-
R595 10
D37 STANLEY_PG1102W_LED
POWER LED
0719 DAUGHTER BOARD CN
CN1
HRS_DF13-15P125H
R662 0
C790 0.1UF/25V
R1218 10K
LIDSW-
WLAN_LED-
LED_SCR-
LED_CAP-
LED_NUM-
LED_HDD-
LIDSW-
MAILKEY-
IEKEY-
WLAN_KEY-
PWRSW-
VCC_SD-
TV_KEY-
DVD_KEY-
1/11
MCE Function
CN30
MINI-DIN
L150 120ohm_FCM2012C
L151 120ohm_FCM2012C
L152 120ohm_FCM2012C
L153 70ohm_HCB1608
Vperiph
MINIGND
R1269 0
R1280 0
SENSE1
SENSE2
PERIPHEN
R1270 4.7K
Q107 2N3906
Q108 LTR-301
Q109 MMBT3904
C1405 0.1uF
C1407 0.01uF
R1271 1.8K
R1272 100K
R1273 1.8K
R1274 1K
R1275 12K
R1276 18K
R1277 100K
R1278 100
U66B LM393_SO8
U66A LM393_SO8
IRRXBB
CN31
MCE-BOARD-CONN
L134 OW3216_900
L155 80ohm_HCB2012
CB1 0.1uF_0402
C1406 4.7uF_0805
USB_PN6
USB_PP6
0719 SATA HD
CN27
SATA CONN_NC
C1236 2200PF/50V
C1235 100uF/10V_D
RXP2
RXN2
TXN2
TXP2
WEBCAM-
R1264 100K
L137 FCM2012V-121RC10_0805
Q103 AO3403
CN26
hrs_df13-11p125v
EMA
EMA-LID
EMAGPIO0
EMAGPIO1
EMAID
EMA_USB_PN4
EMA_USB_PP4
C1251 100UF/10V_B
C1252 2200PF/50V
EMA_GND
R1099 0
R1100 0
R1324 0_0402_NC
R1325 0_0402_NC
L135 OW3216_900
USB_PN4
USB_PP4
0719 USB EMA
R1305 0_NC
R1306 0
R1301 0_NC
R1302 0
R1303 0_NC
R1304 0
U67POWER
C1408 0.1UF
U67A LM393_SO8
R1282 2.7K
D70 BAS316_SOD323
D71 BAS316_SOD323
R1283 20K_1%
R1284 20K_1%
THOPCPU-
THOPCPU+
OPCPUOUT+
ON3
P1999_ON5
R1285 104KT
C1409 0.1UF
R1286 7.15K_1%
C1410 0.22UF
NTCCPU_GND
Z23 JCLOSE_20X20_MIL
Over 95 C protect
1/11 H/W Thermal protection (CPU)
R1307 0_NC
R1308 0
R1311 0
R1312 0_NC
R1288 20K_1%
R1289 20K_1%
R1287 2.7K
D72 BAS316_SOD323
D73 BAS316_SOD323
THOPVGA-
THOPVGA+
OPVGAOUT+
U67B LM393_SO8
R1290 104KT
C1411 0.1UF
R1291 7.15K_1%
C1412 0.22UF
NTCVGA_GND
Z24 JCLOSE_20X20_MIL
1/11 Over 95 C protect
H/W Thermal protection (VGA)

Title
G600 HDD & ODD CONN +LED + IR + MCE

Size Custom
Document Number G600-1-4-01
Rev 1.0

Date: Friday, September 02, 2005
Sheet 35 of 44

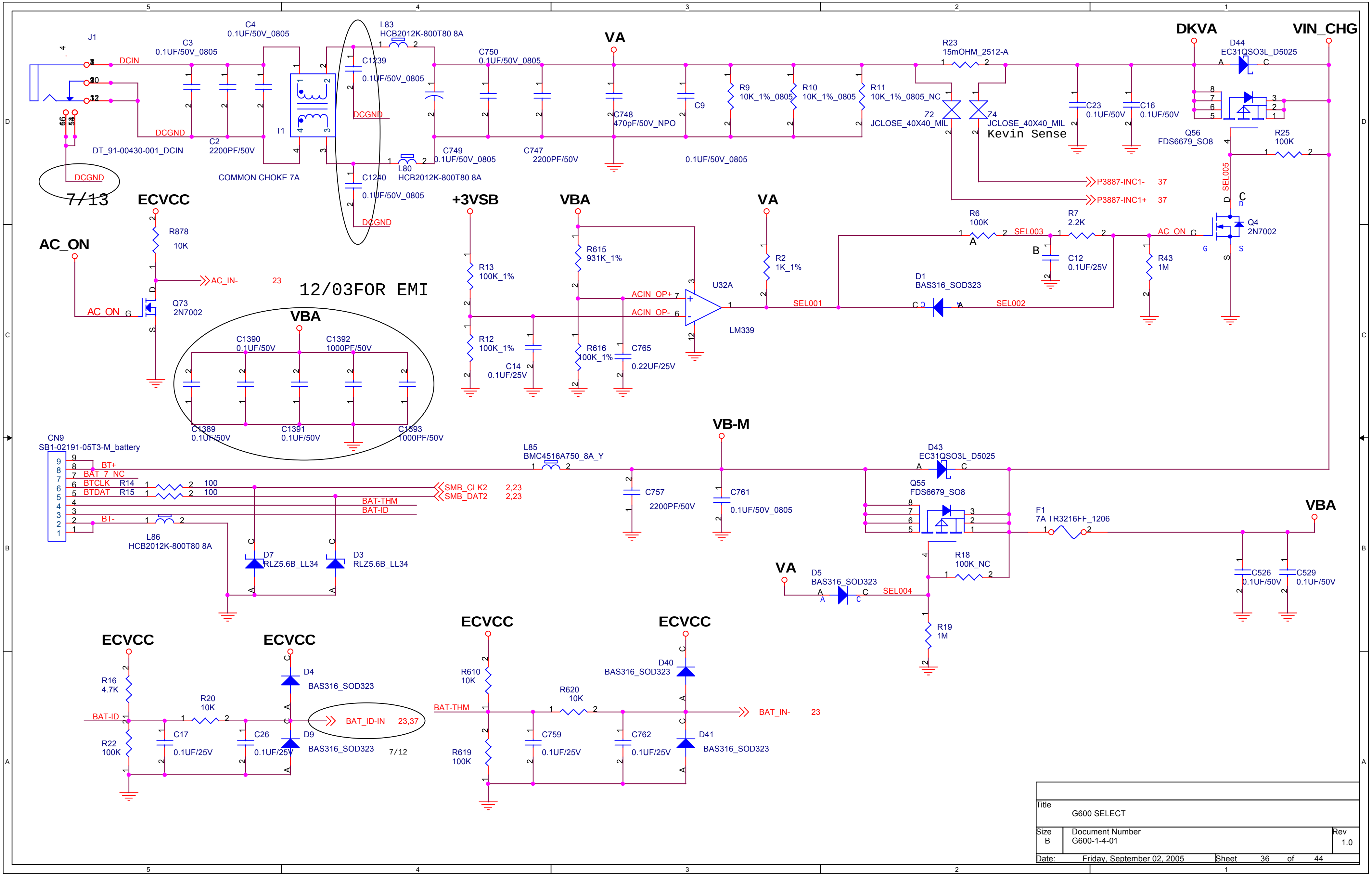
J1
DCIN
DCGND
DT_91-00430-001_DCIN
DCGND
7/13
C3
0.1UF/50V_0805
C4
0.1UF/50V_0805
C2
2200PF/50V
T1
COMMON CHOKE 7A
L83
HCB2012K-800T80 8A
C1239
0.1UF/50V_0805
DCGND
L80
HCB2012K-800T80 8A
C1240
0.1UF/50V_0805
DCGND
C750
0.1UF/50V_0805
C749
0.1UF/50V_0805
C747
2200PF/50V
VA
C748
470pF/50V_NPO
C9
0.1UF/50V_0805
R9
10K_1%_0805
R10
10K_1%_0805
R11
10K_1%_0805_NC
R23
15mOHM_2512-A
Z2
JCLOSE_40X40_MIL
Z4
JCLOSE_40X40_MIL
Kevin Sense
P3887-INC1- 37
P3887-INC1+ 37
C23
0.1UF/50V
C16
0.1UF/50V
DKVA
VIN_CHG
D44
EC31QSO3L_D5025
Q56
FDS6679_SO8
R25
100K
SEL005
ECVCC
R878
10K
AC_ON
AC_ON
AC_IN- 23
Q73
2N7002
12/03FOR EMI
+3VSB
R13
100K_1%
R12
100K_1%
C14
0.1UF/25V
VBA
R615
931K_1%
R616
100K_1%
C765
0.22UF/25V
ACIN_OP+
ACIN_OP-
U32A
LM339
VA
R2
1K_1%
SEL001
R6
100K
SEL003
R7
2.2K
C12
0.1UF/25V
D1
BAS316_SOD323
SEL002
AC_ON
R43
1M
Q4
2N7002
VBA
C1390
0.1UF/50V
C1392
1000PF/50V
C1389
0.1UF/50V
C1391
0.1UF/50V
C1393
1000PF/50V
CN9
SB1-02191-05T3-M_battery
BT+
BAT_7_NC
BTCLK
BTDAT
R14 100
R15 100
SMB_CLK2 2,23
SMB_DAT2 2,23
BAT-THM
BAT-ID
BT-
L86
HCB2012K-800T80 8A
D7
RLZ5.6B_LL34
D3
RLZ5.6B_LL34
L85
BMC4516A750_8A_Y
VB-M
C757
2200PF/50V
C761
0.1UF/50V_0805
D43
EC31QSO3L_D5025
Q55
FDS6679_SO8
F1
7A TR3216FF_1206
VBA
R18
100K_NC
VA
D5
BAS316_SOD323
SEL004
R19
1M
C526
0.1UF/50V
C529
0.1UF/50V
ECVCC
R16
4.7K
BAT-ID
R22
100K
R20
10K
C17
0.1UF/25V
C26
0.1UF/25V
ECVCC
D4
BAS316_SOD323
D9
BAS316_SOD323
BAT_ID-IN 23,37
7/12
ECVCC
R610
10K
BAT-THM
R619
100K
R620
10K
C759
0.1UF/25V
C762
0.1UF/25V
ECVCC
D40
BAS316_SOD323
D41
BAS316_SOD323
BAT_IN- 23

Title
G600 SELECT
Size B
Document Number G600-1-4-01
Rev 1.0
Date: Friday, September 02, 2005
Sheet 36 of 44

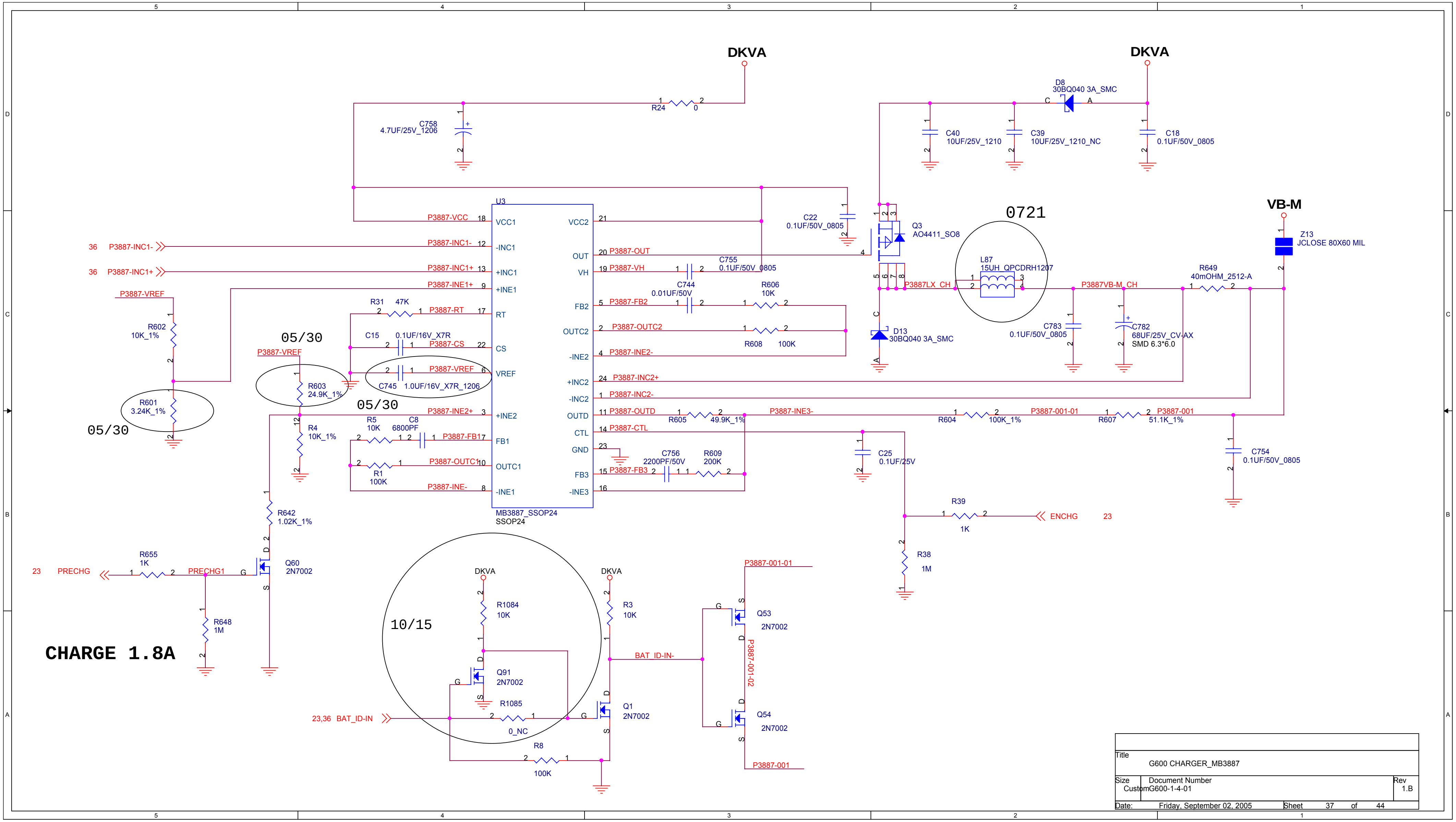
DKVA
DKVA
VB-M
0721
05/30
05/30
05/30
10/15
CHARGE 1.8A
U3
MB3887_SSOP24
SSOP24
VCC1
VCC2
-INC1
+INC1
+INE1
OUT
VH
FB2
RT
CS
OUTC2
-INE2
VREF
+INC2
-INC2
+INE2
OUTD
CTL
FB1
GND
OUTC1
FB3
-INE1
-INE3
P3887-VCC
P3887-INC1-
P3887-INC1+
P3887-INE1+
P3887-RT
P3887-CS
P3887-VREF
P3887-INE2+
P3887-FB1
P3887-OUTC1
P3887-INE-
P3887-OUT
P3887-VH
P3887-FB2
P3887-OUTC2
P3887-INE2-
P3887-INC2+
P3887-INC2-
P3887-OUTD
P3887-CTL
P3887-FB3
P3887-INE3-
P3887-001-01
P3887-001
P3887-001-02
P3887LX_CH
P3887VB-M_CH
36 P3887-INC1-
36 P3887-INC1+
23 PRECHG
PRECHG1
ENCHG 23
23,36 BAT_ID-IN
BAT_ID-IN-
R24 0
C758 4.7UF/25V_1206
C22 0.1UF/50V_0805
C755 0.1UF/50V_0805
C744 0.01UF/50V
R606 10K
R608 100K
R31 47K
C15 0.1UF/16V_X7R
C745 1.0UF/16V_X7R_1206
R602 10K_1%
R601 3.24K_1%
R603 24.9K_1%
R4 10K_1%
R5 10K
C8 6800PF
R1 100K
C756 2200PF/50V
R609 200K
R605 49.9K_1%
R604 100K_1%
R607 51.1K_1%
C754 0.1UF/50V_0805
C25 0.1UF/25V
R39 1K
R38 1M
R642 1.02K_1%
R655 1K
R648 1M
Q60 2N7002
R1084 10K
Q91 2N7002
R1085 0_NC
R8 100K
R3 10K
Q1 2N7002
Q53 2N7002
Q54 2N7002
D8 30BQ040 3A_SMC
C40 10UF/25V_1210
C39 10UF/25V_1210_NC
C18 0.1UF/50V_0805
Q3 AO4411_SO8
L87 15UH_QPCDRH1207
D13 30BQ040 3A_SMC
C783 0.1UF/50V_0805
C782 68UF/25V_CV-AX SMD 6.3*6.0
R649 40mOHM_2512-A
Z13 JCLOSE 80X60 MIL
5
4
3
2
1
D
C
B
A

Title
G600 CHARGER_MB3887

Size Custom
Document Number G600-1-4-01
Rev 1.B

Date: Friday, September 02, 2005
Sheet 37 of 44

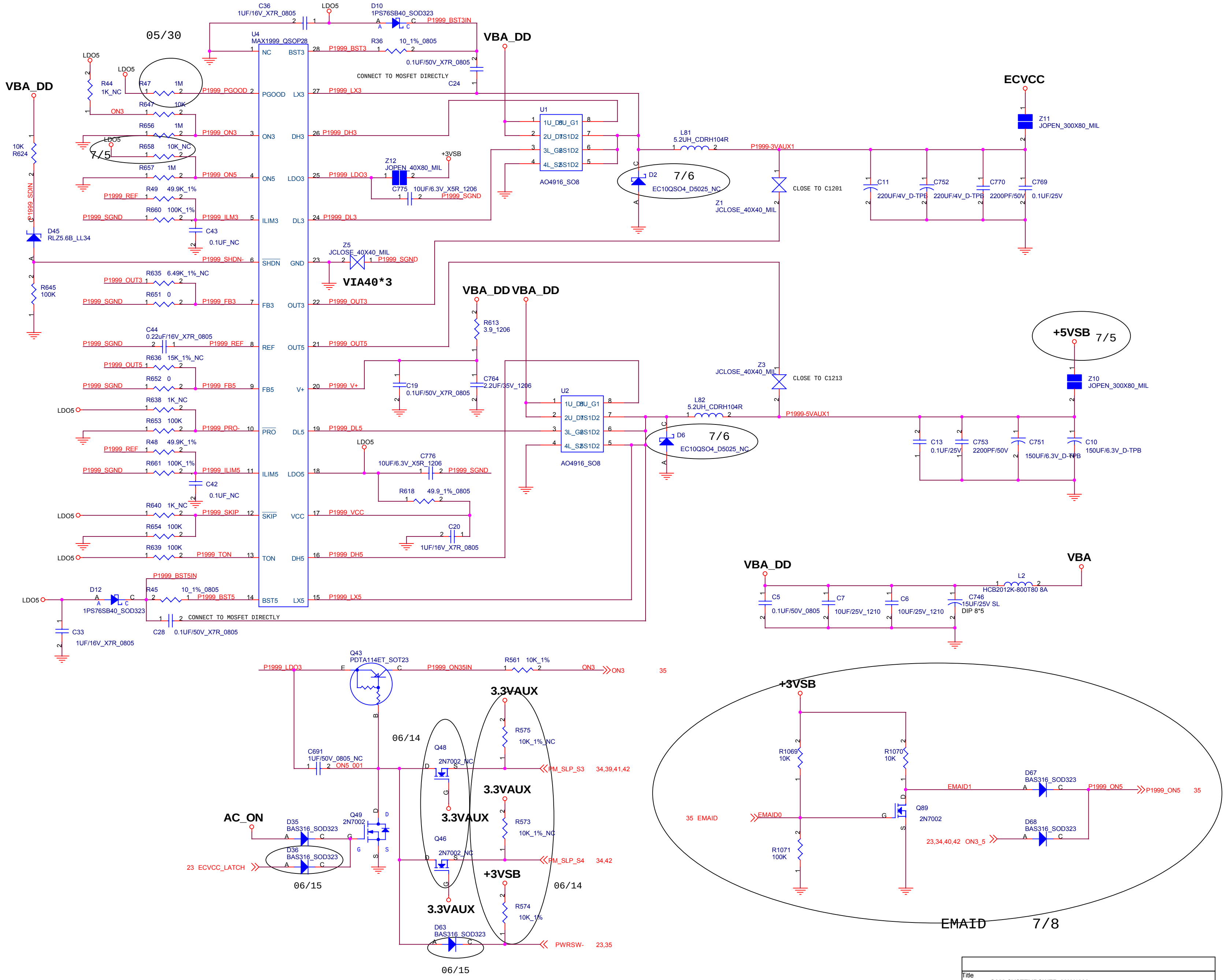
05/30
VBA_DD
LDO5
C36
1UF/16V_X7R_0805
D10
1PS76SB40_SOD323
P1999_BST3IN
U4
MAX1999_QSOP28
NC
BST3
P1999_BST3
R36
10_1%_0805
0.1UF/50V_X7R_0805
C24
CONNECT TO MOSFET DIRECTLY
R44
1K_NC
R47
1M
P1999_PGOOD
PGOOD
LX3
P1999_LX3
ON3
R647
10K
R656
1M
P1999_ON3
DH3
P1999_DH3
R658
10K_NC
7/5
R657
1M
P1999_ON5
ON5
LDO3
P1999_LDO3
Z12
JOPEN_40X80_MIL
+3VSB
C775
10UF/6.3V_X5R_1206
P1999_SGND
R49
49.9K_1%
P1999_REF
R660
100K_1%
P1999_ILM3
ILIM3
DL3
P1999_DL3
C43
0.1UF_NC
10K
R624
P1999_SDIN
D45
RLZ5.6B_LL34
P1999_SHDN-
SHDN
GND
Z5
JCLOSE_40X40_MIL
VIA40*3
R645
100K
R635
6.49K_1%_NC
P1999_OUT3
R651
0
P1999_FB3
FB3
OUT3
C44
0.22uF/16V_X7R_0805
REF
OUT5
P1999_OUT5
R636
15K_1%_NC
R652
0
P1999_FB5
FB5
V+
P1999_V+
R638
1K_NC
R653
100K
P1999_PRO-
PRO
DL5
P1999_DL5
R48
49.9K_1%
R661
100K_1%
P1999_ILIM5
ILIM5
LDO5
C42
0.1UF_NC
R640
1K_NC
P1999_SKIP
SKIP
VCC
P1999_VCC
R654
100K
R639
100K
P1999_TON
TON
DH5
P1999_DH5
D12
1PS76SB40_SOD323
R45
10_1%_0805
P1999_BST5IN
P1999_BST5
BST5
LX5
P1999_LX5
C33
1UF/16V_X7R_0805
C28
0.1UF/50V_X7R_0805
U1
AO4916_SO8
1U_D1
U_G1
2U_D1
S1D2
3L_G2
S1D2
4L_S2
S1D2
D2
EC10QSO4_D5025_NC
7/6
L81
5.2UH_CDRH104R
P1999-3VAUX1
Z1
JCLOSE_40X40_MIL
CLOSE TO C1201
ECVCC
Z11
JOPEN_300X80_MIL
C11
220UF/4V_D-TPE
C752
220UF/4V_D-TPE
C770
2200PF/50V
C769
0.1UF/25V
VBA_DD VBA_DD
R613
3.9_1206
C19
0.1UF/50V_X7R_0805
C764
2.2UF/35V_1206
U2
AO4916_SO8
Z3
JCLOSE_40X40_MIL
CLOSE TO C1213
L82
5.2UH_CDRH104R
P1999-5VAUX1
D6
EC10QSO4_D5025_NC
7/6
+5VSB
7/5
Z10
JOPEN_300X80_MIL
C13
0.1UF/25V
C753
2200PF/50V
C751
150UF/6.3V_D-TPB
C10
150UF/6.3V_D-TPB
C776
10UF/6.3V_X5R_1206
R618
49.9_1%_0805
C20
1UF/16V_X7R_0805
VBA_DD
VBA
L2
HCB2012K-800T80 8A
C5
0.1UF/50V_0805
C7
10UF/25V_1210
C6
10UF/25V_1210
C746
15UF/25V SL
DIP 8*5
Q43
PDTA114ET_SOT23
P1999_LDO3
P1999_ON35IN
R561
10K_1%
ON3
ON3
35
3.3VAUX
R575
10K_1%_NC
06/14
Q48
2N7002_NC
C691
1UF/50V_0805_NC
ON5_001
PM_SLP_S3
34,39,41,42
3.3VAUX
3.3VAUX
R573
10K_1%_NC
AC_ON
D35
BAS316_SOD323
Q49
2N7002
D36
BAS316_SOD323
23 ECVCC_LATCH
06/15
Q46
2N7002_NC
PM_SLP_S4
34,42
+3VSB
R574
10K_1%
06/14
3.3VAUX
D63
BAS316_SOD323
PWRSW-
23,35
06/15
+3VSB
R1069
10K
R1070
10K
EMAID1
D67
BAS316_SOD323
P1999_ON5
P1999_ON5
35
Q89
2N7002
35 EMAID
EMAID0
R1071
100K
D68
BAS316_SOD323
23,34,40,42 ON3_5
EMAID
7/8

Title		
	G600 SYSTEMPOWER_MAX1999	
Size Custom	Document Number G600-1-4-01	Rev 1.B
Date:	Friday, September 02, 2005	Sheet 38 of 44

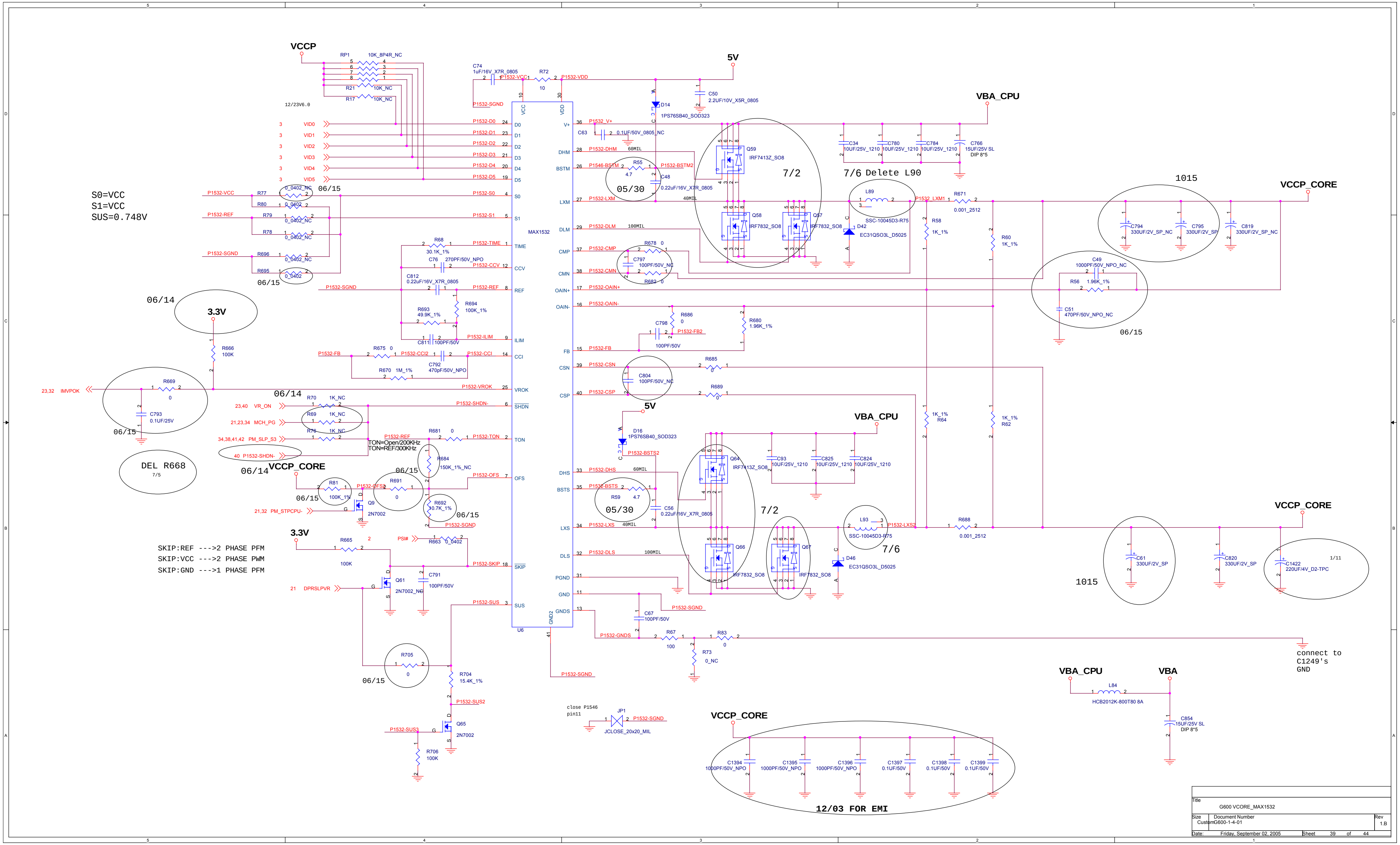
VCCP
RP1 10K_8P4R_NC
R21 10K_NC
R17 10K_NC
12/23V6.0
VID0
VID1
VID2
VID3
VID4
VID5
S0=VCC
S1=VCC
SUS=0.748V
P1532-VCC R77 0_0402_NC
R80 0_0402
P1532-REF R79 0_0402_NC
R78 0_0402_NC
P1532-SGND R696 0_0402_NC
R695 0_0402
06/15
06/15
P1532-SGND
06/14
3.3V
R666 100K
R669 0
23,32 IMVPOK
C793 0.1UF/25V
06/15
DEL R668
7/5
06/14
R70 1K_NC
R69 1K_NC
R73 1K_NC
23,40 VR_ON
21,23,34 MCH_PG
34,38,41,42 PM_SLP_S3
40 P1532-SHDN-
TON=Open/200KHz
TON=REF/300KHz
06/14 VCCP_CORE
R81 100K_1%
21,32 PM_STPCPU-
Q9 2N7002
R691 0
R684 150K_1%_NC
R692 10.7K_1%
06/15
06/15
06/15
3.3V
R665 100K
PSI# R663 0_0402
SKIP:REF --->2 PHASE PFM
SKIP:VCC --->2 PHASE PWM
SKIP:GND --->1 PHASE PFM
21 DPRSLPVR
Q61 2N7002_NC
C791 100PF/50V
R705 0
06/15
R704 15.4K_1%
P1532-SUS2
Q65 2N7002
P1532-SUS3
R706 100K
C74 1uF/16V_X7R_0805
R72 10
P1532-VCC P1532-VDD
R68 30.1K_1%
C76 270PF/50V_NPO
C812 0.22UF/16V_X7R_0805
R694 100K_1%
R693 49.9K_1%
C811 100PF/50V
R675 0
R670 1M_1%
C792 470pF/50V_NPO
U6 MAX1532
VCC VDD D0 D1 D2 D3 D4 D5 S0 S1 TIME CCV REF ILIM CCI VROK SHDN TON OFS SKIP SUS GND2
V+ DHM BSTM LXM DLM CMP CMN OAIN+ OAIN- FB CSN CSP DHS BSTS LXS DLS PGND GND GNDS
5V
D14 1PS76SB40_SOD323
C50 2.2UF/10V_X5R_0805
C63 0.1UF/50V_0805_NC
R55 4.7
C48 0.22uF/16V_X7R_0805
05/30
60MIL 40MIL 100MIL
R678 0
C797 100PF/50V_NC
R682 0
R686 0
C798 100PF/50V
R680 1.96K_1%
R685 0
C804 100PF/50V_NC
R689 0
Q59 IRF7413Z_SO8
Q58 IRF7832_SO8
Q57 IRF7832_SO8
7/2
D42 EC31QSO3L_D5025
VBA_CPU
C34 10UF/25V_1210
C780 10UF/25V_1210
C784 10UF/25V_1210
C766 15UF/25V SL DIP 8*5
7/6 Delete L90
L89 SSC-10045D3-R75
P1532_LXM1
R671 0.001_2512
R58 1K_1%
R60 1K_1%
1015
VCCP_CORE
C794 330UF/2V_SP_NC
C795 330UF/2V_SP
C819 330UF/2V_SP_NC
C49 1000PF/50V_NPO_NC
R56 1.96K_1%
C51 470PF/50V_NPO_NC
06/15
5V
D16 1PS76SB40_SOD323
P1532-BSTS2
VBA_CPU
Q64 IRF7413Z_SO8
C93 10UF/25V_1210
C825 10UF/25V_1210
C824 10UF/25V_1210
R59 4.7
C56 0.22uF/16V_X7R_0805
05/30
7/2
L93 SSC-10045D3-R75
7/6
Q66 IRF7832_SO8
Q67 IRF7832_SO8
D46 EC31QSO3L_D5025
R64 1K_1%
R62 1K_1%
R688 0.001_2512
VCCP_CORE
C61 330UF/2V_SP
C820 330UF/2V_SP
C1422 220UF/4V_D2-TPC
1/11
1015
C67 100PF/50V
P1532-SGND
R67 100
R83 0
R73 0_NC
P1532-GNDS
connect to C1249's GND
P1532-SGND
close P1546 pin11
JP1 JCLOSE_20x20_MIL
VBA_CPU
VBA
L84 HCB2012K-800T80 8A
C854 15UF/25V SL DIP 8*5
VCCP_CORE
C1394 1000PF/50V_NPO
C1395 1000PF/50V_NPO
C1396 1000PF/50V_NPO
C1397 0.1UF/50V
C1398 0.1UF/50V
C1399 0.1UF/50V
12/03 FOR EMI

Title
G600 VCORE_MAX1532

Size Custom
Document Number G600-1-4-01
Rev 1.B

Date: Friday, September 02, 2005
Sheet 39 of 44

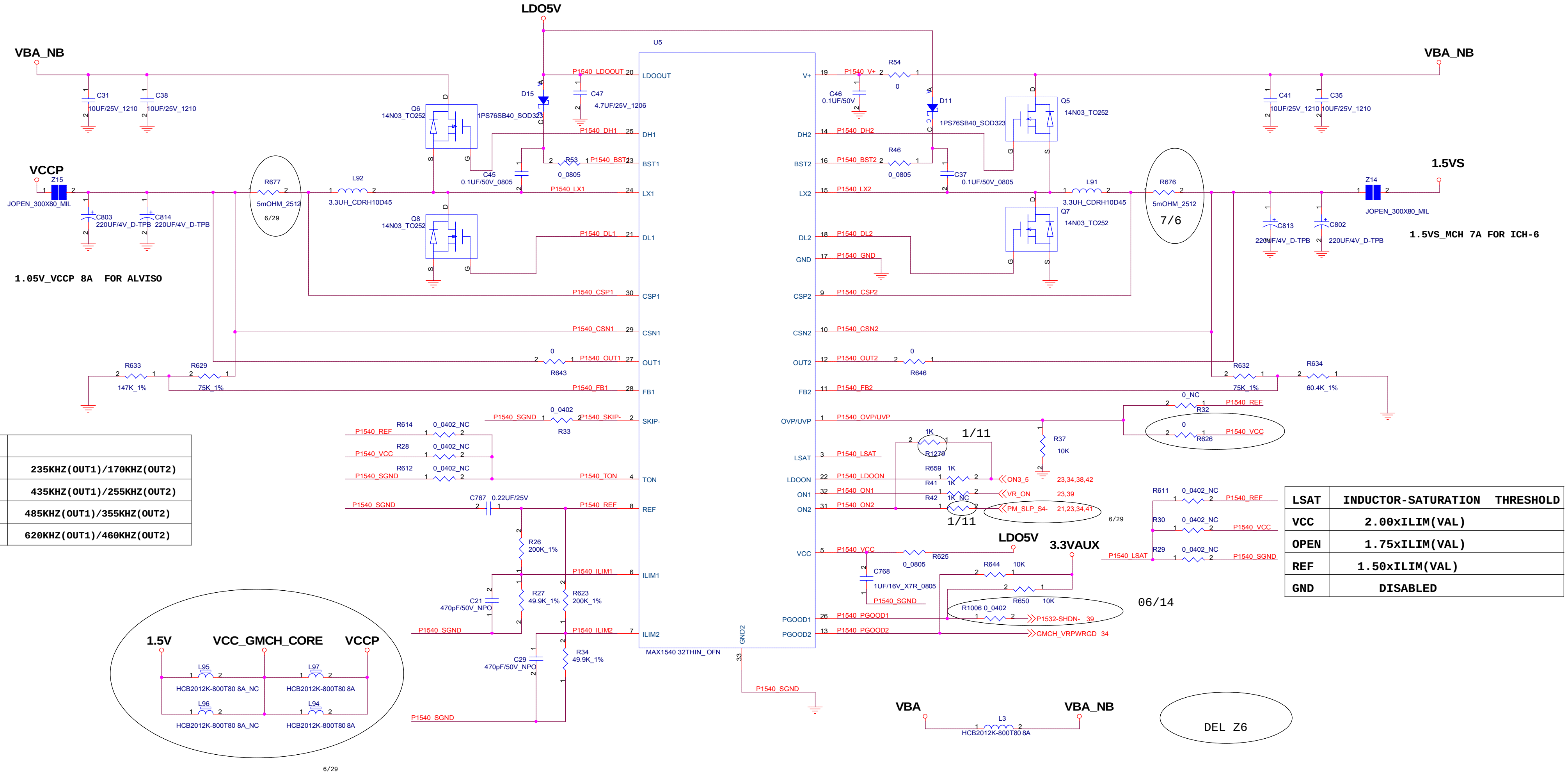
LDO5V
U5
VBA_NB
VBA_NB
C31
10UF/25V_1210
C38
10UF/25V_1210
C41
10UF/25V_1210
C35
10UF/25V_1210
P1540_LDOOUT
C47
4.7UF/25V_1206
D15
1PS76SB40_SOD323
Q6
14N03_TO252
P1540_DH1
C45
0.1UF/50V_0805
R53
0_0805
P1540_BST1
P1540_LX1
VCCP
Z15
JOPEN_300X80_MIL
C803
220UF/4V_D-TPB
C814
220UF/4V_D-TPB
R677
5mOHM_2512
6/29
L92
3.3UH_CDRH10D45
Q8
14N03_TO252
P1540_DL1
1.05V_VCCP 8A FOR ALVISO
P1540_CSP1
P1540_CSN1
R643
0
P1540_OUT1
R633
147K_1%
R629
75K_1%
P1540_FB1
LDOOUT
DH1
BST1
LX1
DL1
CSP1
CSN1
OUT1
FB1
SKIP-
TON
REF
ILIM1
ILIM2
V+
DH2
BST2
LX2
DL2
GND
CSP2
CSN2
OUT2
FB2
OVP/UVP
LSAT
LDOON
ON1
ON2
VCC
PGOOD1
PGOOD2
GND2
MAX1540 32THIN_ OFN
P1540_V+
R54
0
C46
0.1UF/50V
D11
1PS76SB40_SOD323
Q5
14N03_TO252
P1540_DH2
R46
0_0805
P1540_BST2
C37
0.1UF/50V_0805
P1540_LX2
L91
3.3UH_CDRH10D45
Q7
14N03_TO252
R676
5mOHM_2512
7/6
1.5VS
Z14
JOPEN_300X80_MIL
C813
220UF/4V_D-TPB
C802
220UF/4V_D-TPB
1.5VS_MCH 7A FOR ICH-6
P1540_DL2
P1540_GND
P1540_CSP2
P1540_CSN2
P1540_OUT2
R646
0
R632
75K_1%
R634
60.4K_1%
P1540_FB2
P1540_OVP/UVP
R32
0_NC
P1540_REF
R626
0
P1540_VCC
R37
10K
R1278
1K
1/11
P1540_LSAT
P1540_LDOON
R659
1K
ON3_5
23,34,38,42
P1540_ON1
R41
1K
VR_ON
23,39
P1540_ON2
R42
1K_NC
PM_SLP_S4-
21,23,34,41
1/11
6/29
P1540_SGND
R33
0_0402
P1540_SKIP-
R614
0_0402_NC
R28
0_0402_NC
R612
0_0402_NC
P1540_TON
C767
0.22UF/25V
P1540_REF
R26
200K_1%
P1540_ILIM1
C21
470pF/50V_NPO
R27
49.9K_1%
R623
200K_1%
P1540_ILIM2
C29
470pF/50V_NPO
R34
49.9K_1%
P1540_SGND
LDO5V
P1540_VCC
R625
0_0805
C768
1UF/16V_X7R_0805
3.3VAUX
R644
10K
R650
10K
R1006 0_0402
P1532-SHDN-
39
06/14
P1540_PGOOD1
P1540_PGOOD2
GMCH_VRPWRGD
34
R611
0_0402_NC
R30
0_0402_NC
R29
0_0402_NC
P1540_LSAT
P1540_SGND
1.5V
VCC_GMCH_CORE
VCCP
L95
HCB2012K-800T80 8A_NC
L97
HCB2012K-800T80 8A
L96
HCB2012K-800T80 8A_NC
L94
HCB2012K-800T80 8A
6/29
VBA
VBA_NB
L3
HCB2012K-800T80 8A
DEL Z6

TON	
VCC	235KHZ(OUT1)/170KHZ(OUT2)
OPEN	435KHZ(OUT1)/255KHZ(OUT2)
REF	485KHZ(OUT1)/355KHZ(OUT2)
GND	620KHZ(OUT1)/460KHZ(OUT2)

LSAT	INDUCTOR-SATURATION THRESHOLD
VCC	2.00xILIM(VAL)
OPEN	1.75xILIM(VAL)
REF	1.50xILIM(VAL)
GND	DISABLED

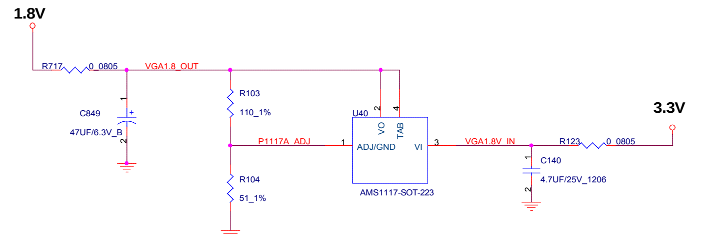
1.8V
R717
0_0805
VGA1.8_OUT
C849
47UF/6.3V_B
R103
110_1%
U40
VO
TAB
ADJ/GND
VI
P1117A_ADJ
R104
51_1%
AMS1117-SOT-223
3.3V
VGA1.8V_IN
R123
0_0805
C140
4.7UF/25V_1206

VCC 1.8V SUPPLY FOR VGA

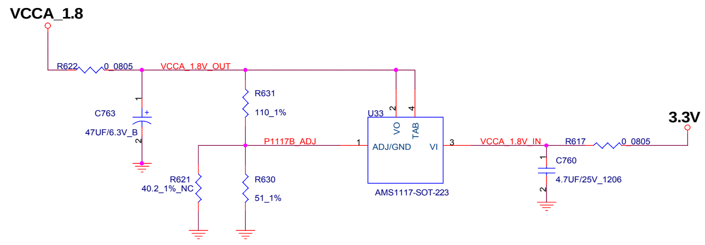
VCCA_1.8
R622
0_0805
VCCA_1.8V_OUT
C763
47UF/6.3V_B
R631
110_1%
U33
VO
TAB
ADJ/GND
VI
P1117B_ADJ
R621
40.2_1%_NC
R630
51_1%
AMS1117-SOT-223
3.3V
VCCA_1.8V_IN
R617
0_0805
C760
4.7UF/25V_1206

VCC 1.8V SUPPLY FOR CPU & MCH

Title
G600 MAX1540(VCCP&1.5V)
Size Custom
Document Number G600-1-4-01
Rev 1.0
Date: Friday, September 02, 2005
Sheet 40 of 44

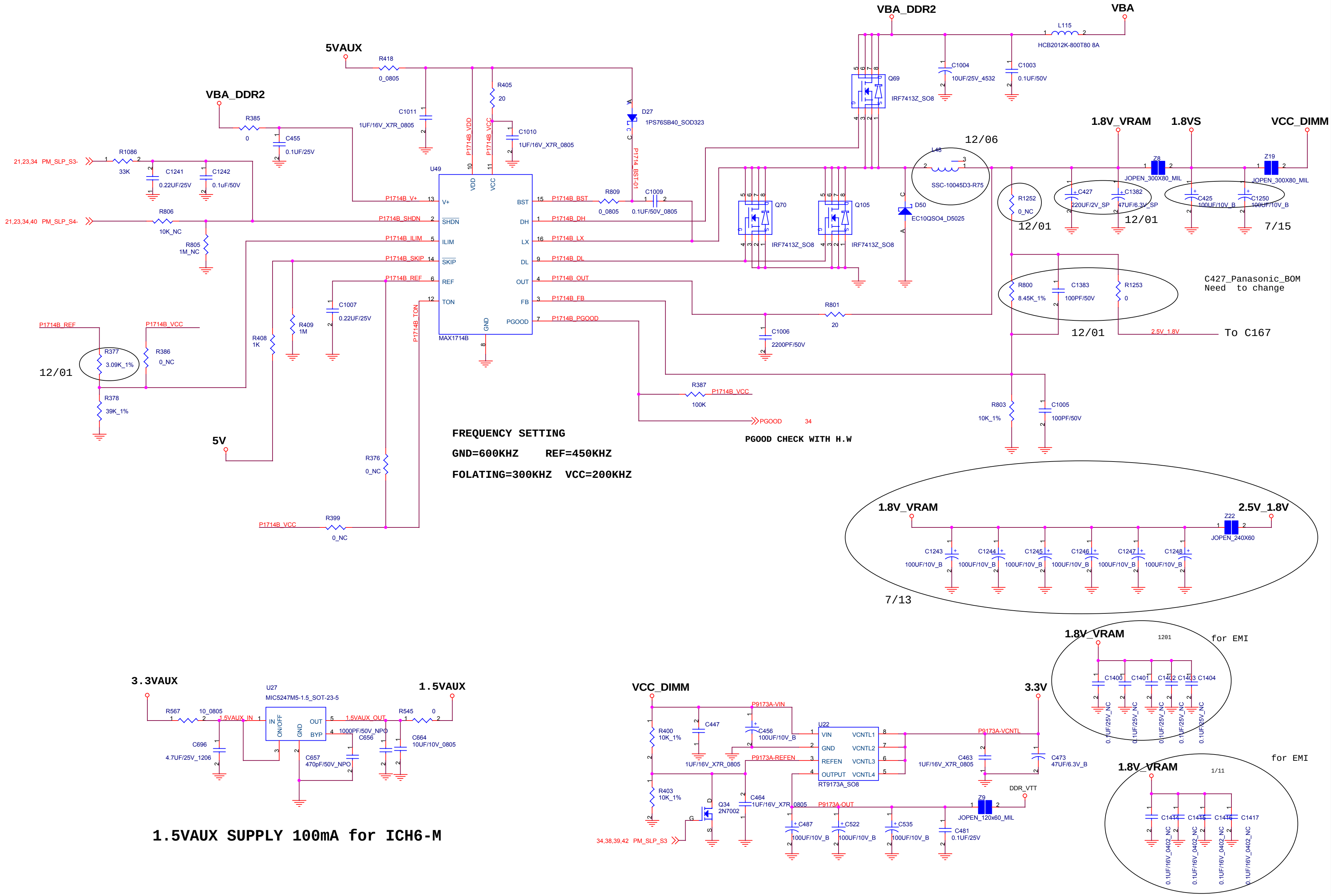
5VAUX
VBA_DDR2
VBA
R418
0_0805
R405
20
C1011
1UF/16V_X7R_0805
C1010
1UF/16V_X7R_0805
D27
1PS76SB40_SOD323
P1714B_VDD
P1714B_VCC
P1714_BST-01
R385
0
C455
0.1UF/25V
R1086
33K
C1241
0.22UF/25V
C1242
0.1uF/50V
21,23,34 PM_SLP_S3-
21,23,34,40 PM_SLP_S4-
R806
10K_NC
R805
1M_NC
U49
MAX1714B
V+
SHDN
ILIM
SKIP
REF
TON
VDD
VCC
GND
BST
DH
LX
DL
OUT
FB
PGOOD
P1714B_V+
P1714B_SHDN
P1714B_ILIM
P1714B_SKIP
P1714B_REF
P1714B_TON
P1714B_BST
P1714B_DH
P1714B_LX
P1714B_DL
P1714B_OUT
P1714B_FB
P1714B_PGOOD
R809
0_0805
C1009
0.1UF/50V_0805
C1007
0.22UF/25V
R409
1M
R408
1K
P1714B_REF
P1714B_VCC
R377
3.09K_1%
R386
0_NC
R378
39K_1%
12/01
5V
R376
0_NC
R399
0_NC
P1714B_VCC
FREQUENCY SETTING
GND=600KHZ REF=450KHZ
FOLATING=300KHZ VCC=200KHZ
L115
HCB2012K-800T80 8A
C1004
10UF/25V_4532
C1003
0.1UF/50V
Q69
IRF7413Z_SO8
L48
SSC-10045D3-R75
12/06
Q70
IRF7413Z_SO8
Q105
IRF7413Z_SO8
D50
EC10QSO4_D5025
1.8V_VRAM
1.8VS
VCC_DIMM
Z8
JOPEN_300X80_MIL
Z19
JOPEN_300X80_MIL
R1252
0_NC
12/01
C427
220UF/2V_SP
C1382
47UF/6.3V_SP
12/01
C425
100UF/10V_B
C1250
100UF/10V_B
7/15
R800
8.45K_1%
C1383
100PF/50V
R1253
0
12/01
C427_Panasonic_BOM
Need to change
2.5V_1.8V
To C167
R801
20
C1006
2200PF/50V
R387
100K
P1714B_VCC
PGOOD 34
PGOOD CHECK WITH H.W
R803
10K_1%
C1005
100PF/50V
1.8V_VRAM
2.5V_1.8V
Z22
JOPEN_240X60
C1243
C1244
C1245
C1246
C1247
C1248
100UF/10V_B
7/13
1.8V_VRAM
1201
for EMI
C1400
C1401
C1402
C1403
C1404
0.1UF/25V_NC
3.3VAUX
1.5VAUX
U27
MIC5247M5-1.5_SOT-23-5
IN
ON/OFF
GND
OUT
BYP
R567
10_0805
1.5VAUX_IN
1.5VAUX_OUT
R545
0
C696
4.7UF/25V_1206
C656
1000PF/50V_NPO
C664
10UF/10V_0805
C657
470pF/50V_NPO
1.5VAUX SUPPLY 100mA for ICH6-M
VCC_DIMM
3.3V
R400
10K_1%
C447
1UF/16V_X7R_0805
C456
100UF/10V_B
P9173A-VIN
P9173A-REFEN
P9173A-VCNTL
P9173A-OUT
U22
RT9173A_SO8
VIN
GND
REFEN
OUTPUT
VCNTL1
VCNTL2
VCNTL3
VCNTL4
C463
1UF/16V_X7R_0805
C473
47UF/6.3V_B
R403
10K_1%
Q34
2N7002
34,38,39,42 PM_SLP_S3
C464
1UF/16V_X7R_0805
C487
100UF/10V_B
C522
100UF/10V_B
C535
100UF/10V_B
C481
0.1UF/25V
DDR_VTT
Z9
JOPEN_120x60_MIL
1.8V_VRAM
1/11
for EMI
C1414
C1415
C1416
C1417
0.1UF/16V_0402_NC

Title G600 MAX1714B&RT9173(1.8V&0.9V)		
Size C	Document Number G600-1-4-01	Rev 1.0
Date: Friday, September 02, 2005	Sheet 41 of 44	

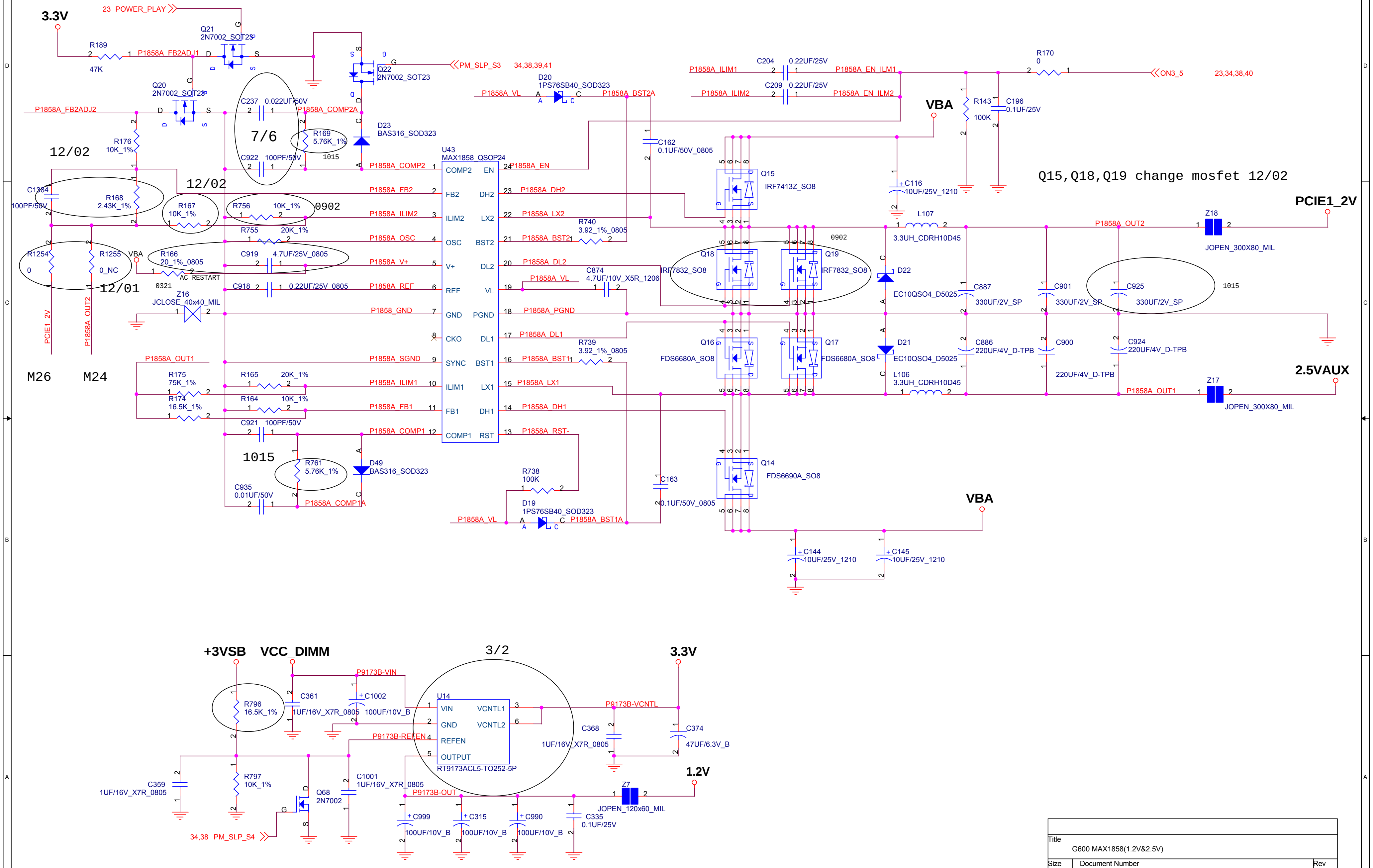

3.3V
23 POWER_PLAY
Q21 2N7002_SOT23
R189 47K
P1858A_FB2ADJ1
Q22 2N7002_SOT23
PM_SLP_S3 34,38,39,41
Q20 2N7002_SOT23
P1858A_FB2ADJ2
C237 0.022UF/50V
P1858A_COMP2A
D23 BAS316_SOD323
R169 5.76K_1%
1015
7/6
C922 100PF/50V
R176 10K_1%
12/02
C1384 100PF/50V
R168 2.43K_1%
R167 10K_1%
R756 10K_1%
0902
R755 20K_1%
R1254 0
R1255 0_NC
VBA
R166 20_1%_0805
AC_RESTART
C919 4.7UF/25V_0805
C918 0.22UF/25V_0805
12/01
0321
Z16 JCLOSE_40x40_MIL
PCIE1_2V
P1858A_OUT2
P1858A_OUT1
M26
M24
R175 75K_1%
R174 16.5K_1%
R165 20K_1%
R164 10K_1%
C921 100PF/50V
1015
R761 5.76K_1%
D49 BAS316_SOD323
C935 0.01UF/50V
P1858A_COMP1A
U43 MAX1858_QSOP24
COMP2 EN FB2 DH2 ILIM2 LX2 OSC BST2 V+ DL2 REF VL GND PGND CKO DL1 SYNC BST1 ILIM1 LX1 FB1 DH1 COMP1 RST
P1858A_COMP2 P1858A_FB2 P1858A_ILIM2 P1858A_OSC P1858A_V+ P1858A_REF P1858_GND P1858A_SGND P1858A_ILIM1 P1858A_FB1 P1858A_COMP1
P1858A_EN P1858A_DH2 P1858A_LX2 P1858A_BST2 P1858A_DL2 P1858A_VL P1858A_PGND P1858A_DL1 P1858A_BST1 P1858A_LX1 P1858A_DH1 P1858A_RST-
D20 1PS76SB40_SOD323
P1858A_VL P1858A_BST2A
R740 3.92_1%_0805
C874 4.7UF/10V_X5R_1206
R739 3.92_1%_0805
R738 100K
D19 1PS76SB40_SOD323
P1858A_BST1A
C162 0.1UF/50V_0805
C163 0.1UF/50V_0805
C204 0.22UF/25V
C209 0.22UF/25V
P1858A_ILIM1 P1858A_EN_ILM1
P1858A_ILIM2 P1858A_EN_ILM2
R170 0
ON3_5 23,34,38,40
R143 100K
C196 0.1UF/25V
VBA
Q15 IRF7413Z_SO8
C116 10UF/25V_1210
Q15,Q18,Q19 change mosfet 12/02
PCIE1_2V
L107 3.3UH_CDRH10D45
Z18 JOPEN_300X80_MIL
Q18 IRF7832_SO8
Q19 IRF7832_SO8
0902
D22 EC10QS04_D5025
C887 330UF/2V_SP
C901 330UF/2V_SP
C925 330UF/2V_SP
1015
Q16 FDS6680A_SO8
Q17 FDS6680A_SO8
D21 EC10QS04_D5025
C886 220UF/4V_D-TPB
C900 220UF/4V_D-TPB
C924 220UF/4V_D-TPB
L106 3.3UH_CDRH10D45
2.5VAUX
Z17 JOPEN_300X80_MIL
Q14 FDS6690A_SO8
VBA
C144 10UF/25V_1210
C145 10UF/25V_1210
+3VSB
VCC_DIMM
3/2
3.3V
P9173B-VIN
R796 16.5K_1%
C361 1UF/16V_X7R_0805
C1002 100UF/10V_B
U14 RT9173ACL5-TO252-5P
VIN VCNTL1 GND VCNTL2 REFEN OUTPUT
P9173B-VCNTL
P9173B-REFEN
C368 1UF/16V_X7R_0805
C374 47UF/6.3V_B
1.2V
C359 1UF/16V_X7R_0805
R797 10K_1%
Q68 2N7002
C1001 1UF/16V_X7R_0805
P9173B-OUT
Z7 JOPEN_120x60_MIL
34,38 PM_SLP_S4
C999 100UF/10V_B
C315 100UF/10V_B
C990 100UF/10V_B
C335 0.1UF/25V

Title
G600 MAX1858(1.2V&2.5V)

Size	Document Number	Rev
Custom	G600-1-4-01	1.D

Date: Friday, September 02, 2005 Sheet 42 of 44

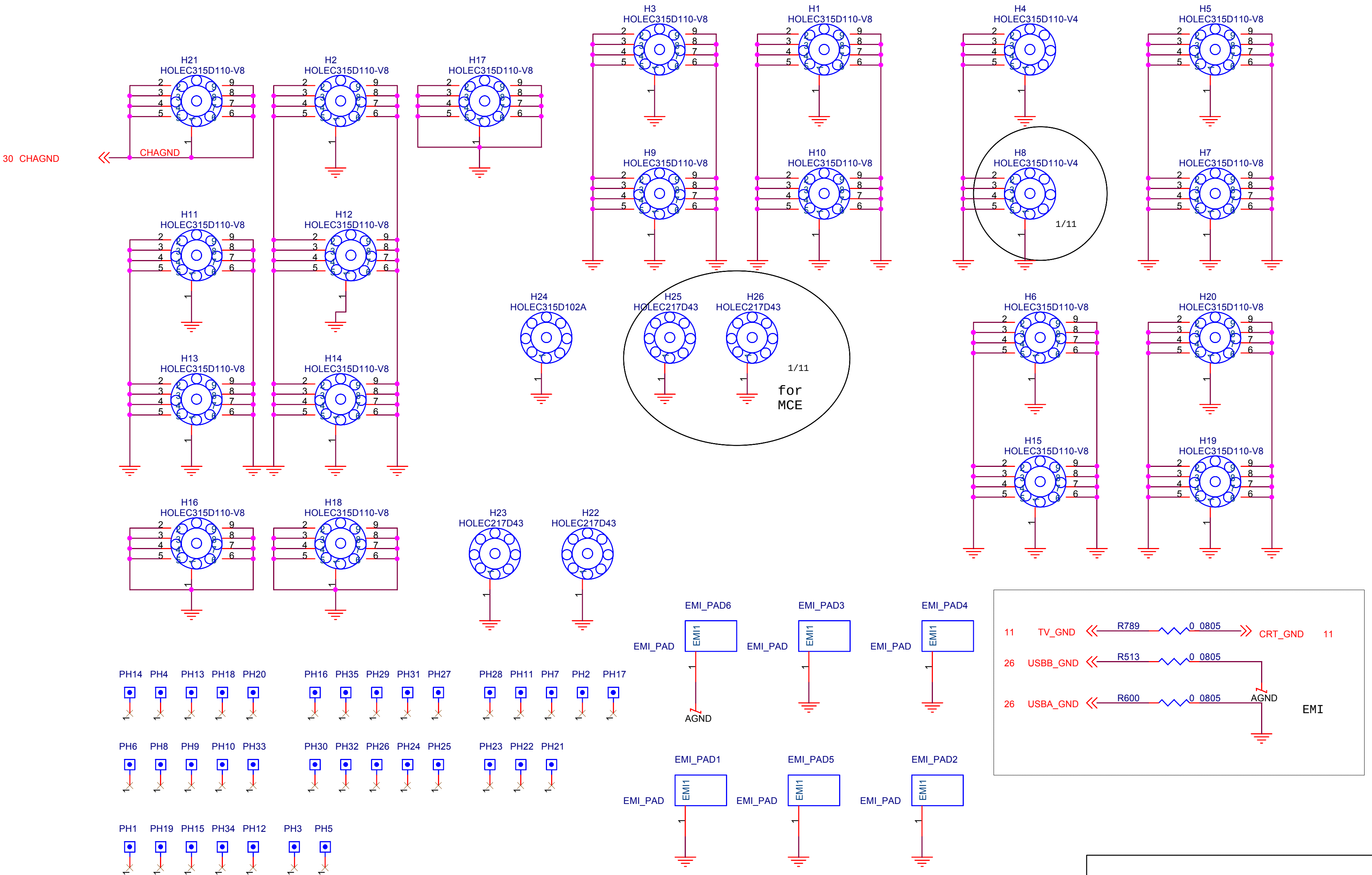
H3
HOLEC315D110-V8
H1
HOLEC315D110-V8
H4
HOLEC315D110-V4
H5
HOLEC315D110-V8
H21
HOLEC315D110-V8
H2
HOLEC315D110-V8
H17
HOLEC315D110-V8
30 CHAGND
CHAGND
H9
HOLEC315D110-V8
H10
HOLEC315D110-V8
H8
HOLEC315D110-V4
1/11
H7
HOLEC315D110-V8
H11
HOLEC315D110-V8
H12
HOLEC315D110-V8
H24
HOLEC315D102A
H25
HOLEC217D43
H26
HOLEC217D43
1/11
for
MCE
H6
HOLEC315D110-V8
H20
HOLEC315D110-V8
H13
HOLEC315D110-V8
H14
HOLEC315D110-V8
H15
HOLEC315D110-V8
H19
HOLEC315D110-V8
H16
HOLEC315D110-V8
H18
HOLEC315D110-V8
H23
HOLEC217D43
H22
HOLEC217D43
EMI_PAD6
EMI_PAD3
EMI_PAD4
EMI_PAD
EMI1
AGND
11
TV_GND
R789
0_0805
CRT_GND
11
26
USBB_GND
R513
0_0805
26
USBA_GND
R600
0_0805
AGND
EMI
PH14
PH4
PH13
PH18
PH20
PH16
PH35
PH29
PH31
PH27
PH28
PH11
PH7
PH2
PH17
PH6
PH8
PH9
PH10
PH33
PH30
PH32
PH26
PH24
PH25
PH23
PH22
PH21
EMI_PAD1
EMI_PAD5
EMI_PAD2
PH1
PH19
PH15
PH34
PH12
PH3
PH5

Title G600		
Size B	Document Number G600-1-4-01	Rev 1.0
Date: Friday, September 02, 2005	Sheet 43 of 44	

A.0 INITIAL 0519A
B.0 UPDATA 0719B
C.0 CHANGE ALC202 TO ALC655
D.0 MODIFILY
E.0 1.Add MCE function
    2.H/W Thermal protection (VGA&CPU)
F.0 1.CHANGE FAN CONTROL IC
    2.GBLAN MODIFILY
F.A 1.INSERT ADAPTER WILL RESTART CHANGE R166,C919
F.B 1.Add Speaker in and Micphone in Auto Detect
1.0 1.change MLB Ver F TO Ver 1.0
1.A 1.Add Q'com usb buletooth function.
    2.add panel ID select.
1.B RESISTOR AND CAPACITANCE CHANGE R601,R603,C745,R47,R55,R59
1.C ADD U12,DEL R1004, S3 USB2.0 FAIL
1.D DOS-XP BLACK SCREEN

Title <Title>		
Size B	Document Number G600-1-4-01	Rev 1.D
Date: Friday, September 02, 2005	Sheet 44 of 44	