ZRS REV : A01

@ : Nopop Component
1@ : ZUMA Used Only
2@ : Riker Used Only
3@ : ZRS with discrete Used Only
4@ : ZUMA & Zanzibar Used Only
with BCM4401E w/o Docking and Smart card
5@ : Rikers & Suva Used Only
with BCM5752/Docking/Smart Card
6@ : Suva Used Only
7@ : Rikers/Zanzibar/ZUMA Used Only

Config. TABLE

Project	Config.
ZUMA	1@ + 4@ +7@
Zanzibar	3@ + 4@ + 7@
Suva	3@ + 5@ + 6@
Rikers	2@ + 3@ + 5@ + 7@

Yonah Schematics with Capture CIS and Function Field

uFCPGA Yonah
12/13/2005
REV : 2.0

DELL CONFIDENTIAL/PROPRIETARY

PROPRIETARY NOTE: THIS SHEET OF ENGINEERING DRAWING AND SPECIFICATIONS CONTAINS CONFIDENTIAL TRADE SECRET AND OTHER PROPRIETARY INFORMATION OF DELL INC. ("DELL") THIS DOCUMENT MAY NOT BE TRANSFERRED OR COPIED WITHOUT THE EXPRESS WRITTEN AUTHORIZATION OF DELL. IN ADDITION, NEITHER THIS SHEET NOR THE INFORMATION IT CONTAINS WAY BE USED BY OR DISCLOSED TO ANY THIRD PARTY WITHOUT DELL'S EXPRESS WRITTEN CONSENT.

Compal confidential

Block Diagram

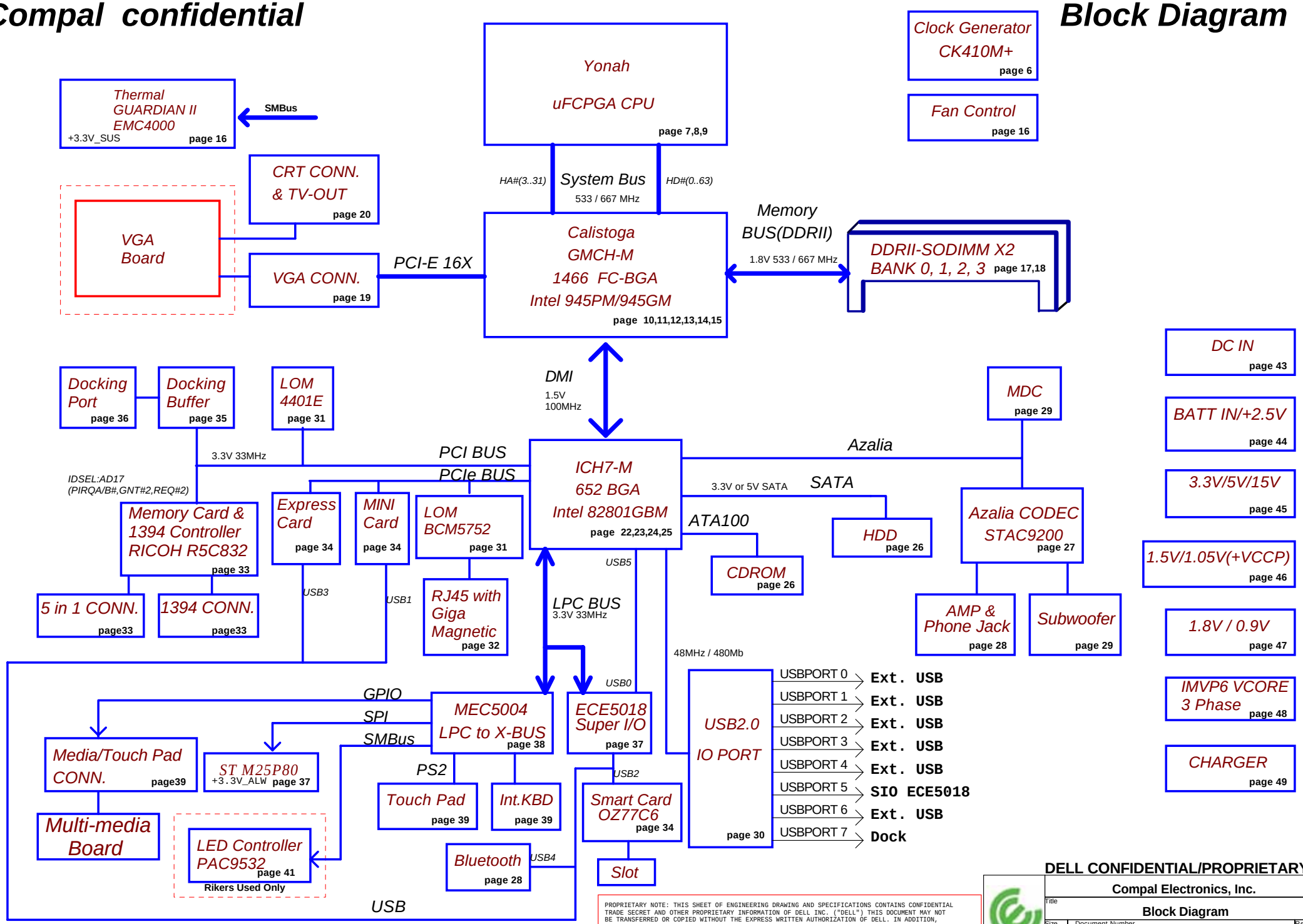

DELL CONFIDENTIAL/PROPRIETARY

PROPRIETARY NOTE: THIS SHEET OF ENGINEERING DRAWING AND SPECIFICATIONS CONTAINS CONFIDENTIAL TRADE SECRET AND OTHER PROPRIETARY INFORMATION OF DELL INC. ("DELL") THIS DOCUMENT MAY NOT BE TRANSFERRED OR COPIED WITHOUT THE EXPRESS WRITTEN AUTHORIZATION OF DELL. IN ADDITION, NEITHER THIS SHEET NOR THE INFORMATION IT CONTAINS WAY BE USED BY OR DISCLOSED TO ANY THIRD PARTY WITHOUT DELL'S EXPRESS WRITTEN CONSENT.

Compal Electronics, Inc.	
Title	Block Diagram
Size	Document Number: LA-2881P
Rev	2.0
Date: Tuesday, December 13, 2005	Sheet 2 of 62

PM TABLE

State \ power plane	+5V_ALW +3.3V_ALW +3.3V_SRC	+15V_SUS +5V_SUS +3.3V_SUS +1.8V_SUS	+5V_RUN +3.3V_RUN +2.5V_RUN +1.8V_RUN +0.9V_DDR_VTT +VCC_CORE +1.05V_VCCP
S0	ON	ON	ON
S1	ON	ON	ON
S3	ON	ON	OFF
S5 S4/AC	ON	OFF	OFF
S5 S4/AC don't exist	OFF	OFF	OFF

	USB PORT#	Description
ICH7-M	0	SUPER I/O ECE5018
	1	JUSB_R (Ext Back Right Bottom)
	2	JUSB_S (Ext Side Bottom)
	3	JUSB_R (Ext Back Right Top)
	4	JUSB_L (Ext Back Left Top)
	5	JUSB_S (Ext Side Top)
	6	JUSB_L (Ext Back Left Bottom)
	7	DOCKING
SIO ECE5018	0	ICH7-M
	1	MINI CARD WLAN
	2	SMART CARD
	3	EXPRESS CARD
	4	BLUE TOOTH

PCI TABLE

PCI DEVICE	IDSEL	REQ#/GNT#	PIRQ
LAN	AD16	REQ#3/GNT#3	IRQB
Dock	AD24	REQ#0/GNT#0	IRQA
R5C832	AD17	REQ#2/GNT#2	IRQC,D

PCI EXPRESS	DESTINATION
Lane 1	No
Lane 2	MINI CARD WLAN
Lane 3	GIGA LAN
Lane 4	EXPRESS CARD

PROPRIETARY NOTE: THIS SHEET OF ENGINEERING DRAWING AND SPECIFICATIONS CONTAINS CONFIDENTIAL TRADE SECRET AND OTHER PROPRIETARY INFORMATION OF DELL INC. ("DELL") THIS DOCUMENT MAY NOT BE TRANSFERRED OR COPIED WITHOUT THE EXPRESS WRITTEN AUTHORIZATION OF DELL. IN ADDITION, NEITHER THIS SHEET NOR THE INFORMATION IT CONTAINS WAY BE USED BY OR DISCLOSED TO ANY THIRD PARTY WITHOUT DELL'S EXPRESS WRITTEN CONSENT.

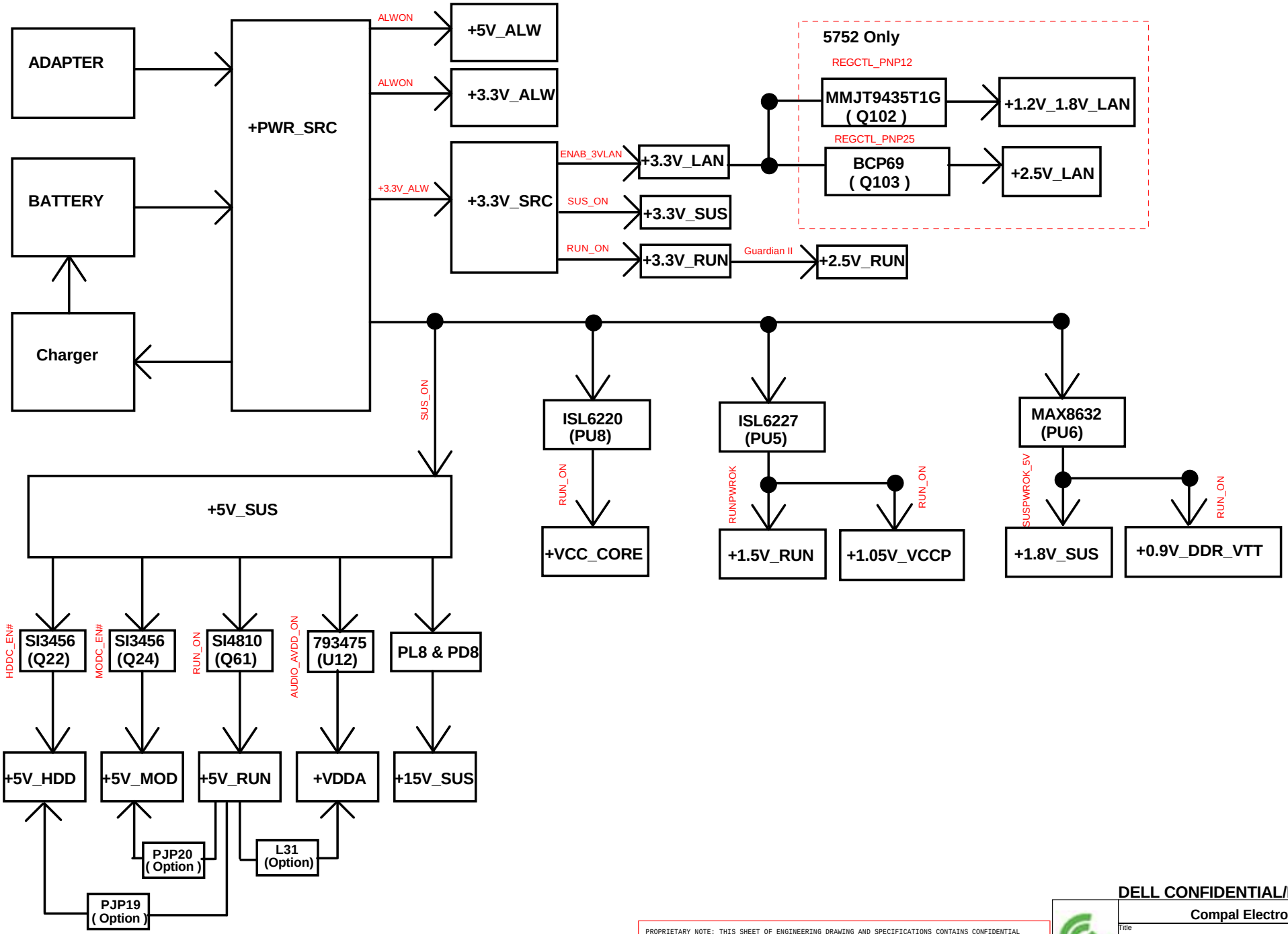

PROPRIETARY NOTE: THIS SHEET OF ENGINEERING DRAWING AND SPECIFICATIONS CONTAINS CONFIDENTIAL TRADE SECRET AND OTHER PROPRIETARY INFORMATION OF DELL INC. ("DELL") THIS DOCUMENT MAY NOT BE TRANSFERRED OR COPIED WITHOUT THE EXPRESS WRITTEN AUTHORIZATION OF DELL. IN ADDITION, NEITHER THIS SHEET NOR THE INFORMATION IT CONTAINS WAY BE USED BY OR DISCLOSED TO ANY THIRD PARTY WITHOUT DELL'S EXPRESS WRITTEN CONSENT.

DELL CONFIDENTIAL/PROPRIETARY

Compal Electronics, Inc.

Title	Power Rail
Size	
Document Number	LA-2881P
Rev	2.0
Date:	Tuesday, December 13, 2005
Sheet	4 of 62

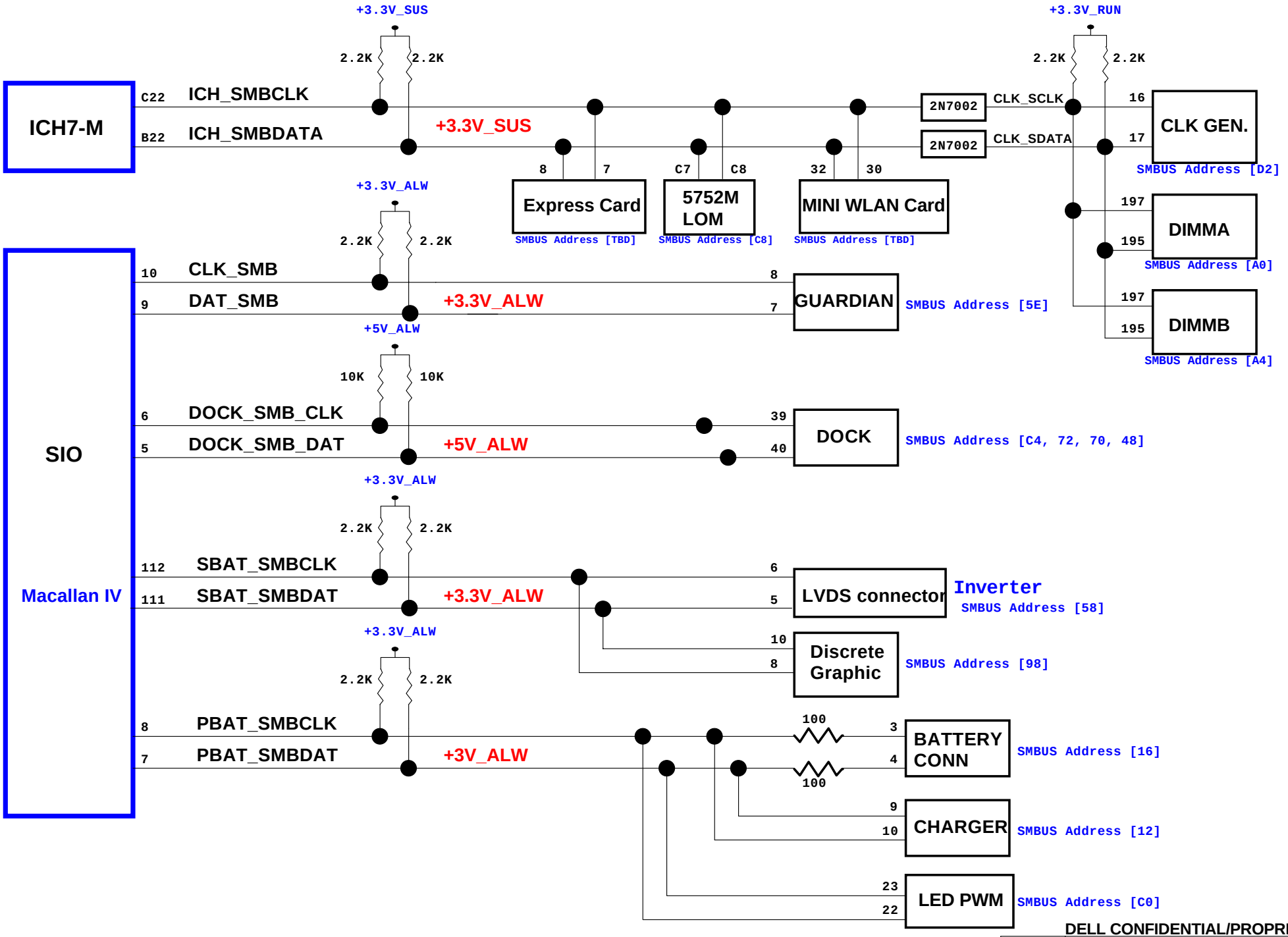

DELL CONFIDENTIAL/PROPRIETARY

PROPRIETARY NOTE: THIS SHEET OF ENGINEERING DRAWING AND SPECIFICATIONS CONTAINS CONFIDENTIAL TRADE SECRET AND OTHER PROPRIETARY INFORMATION OF DELL INC. ("DELL") THIS DOCUMENT MAY NOT BE TRANSFERRED OR COPIED WITHOUT THE EXPRESS WRITTEN AUTHORIZATION OF DELL. IN ADDITION, NEITHER THIS SHEET NOR THE INFORMATION IT CONTAINS WAY BE USED BY OR DISCLOSED TO ANY THIRD PARTY WITHOUT DELL'S EXPRESS WRITTEN CONSENT.

Compal Electronics, Inc.

Title: SMBUS TOPOLOGY

Size | Document Number: LA-2881P | Rev 2.0

Date: Tuesday, December 13, 2005 | Sheet 5 of 62

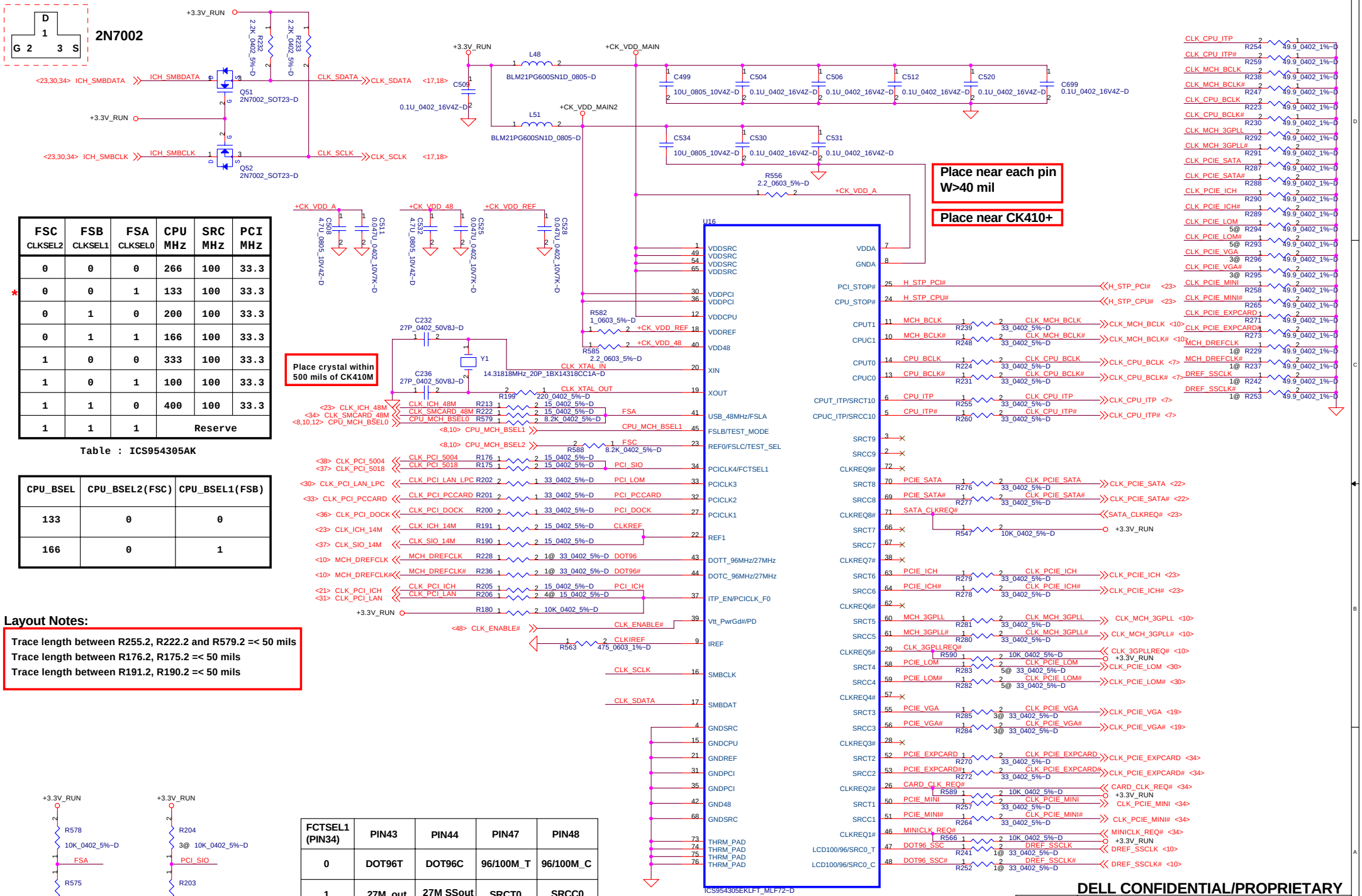

FSC CLKSEL2	FSB CLKSEL1	FSA CLKSEL0	CPU MHz	SRC MHz	PCI MHz
0	0	0	266	100	33.3
* 0	0	1	133	100	33.3
0	1	0	200	100	33.3
0	1	1	166	100	33.3
1	0	0	333	100	33.3
1	0	1	100	100	33.3
1	1	0	400	100	33.3
1	1	1	Reserve		

Table : ICS954305AK

CPU_BSEL	CPU_BSEL2(FSC)	CPU_BSEL1(FSB)
133	0	0
166	0	1

Layout Notes:

Trace length between R255.2, R222.2 and R579.2 =< 50 mils
Trace length between R176.2, R175.2 =< 50 mils
Trace length between R191.2, R190.2 =< 50 mils

FCTSEL1 (PIN34)	PIN43	PIN44	PIN47	PIN48
0	DOT96T	DOT96C	96/100M_T	96/100M_C
1	27M_out	27M SSout	SRCT0	SRCC0

Solder Thermal Pad to GND. Add Min. 4 vias.

PROPRIETARY NOTE: THIS SHEET OF ENGINEERING DRAWING AND SPECIFICATIONS CONTAINS CONFIDENTIAL TRADE SECRET AND OTHER PROPRIETARY INFORMATION OF DELL INC. ("DELL") THIS DOCUMENT MAY NOT BE TRANSFERRED OR COPIED WITHOUT THE EXPRESS WRITTEN AUTHORIZATION OF DELL. IN ADDITION, NEITHER THIS SHEET NOR THE INFORMATION IT CONTAINS WAY BE USED BY OR DISCLOSED TO ANY THIRD PARTY WITHOUT DELL'S EXPRESS WRITTEN CONSENT.

DELL CONFIDENTIAL/PROPRIETARY

Compal Electronics, Inc.

Title: Clock Generator

Size: | Document Number: LA-2881P | Rev: 2.0

Date: Tuesday, December 13, 2005 | Sheet 6 of 62

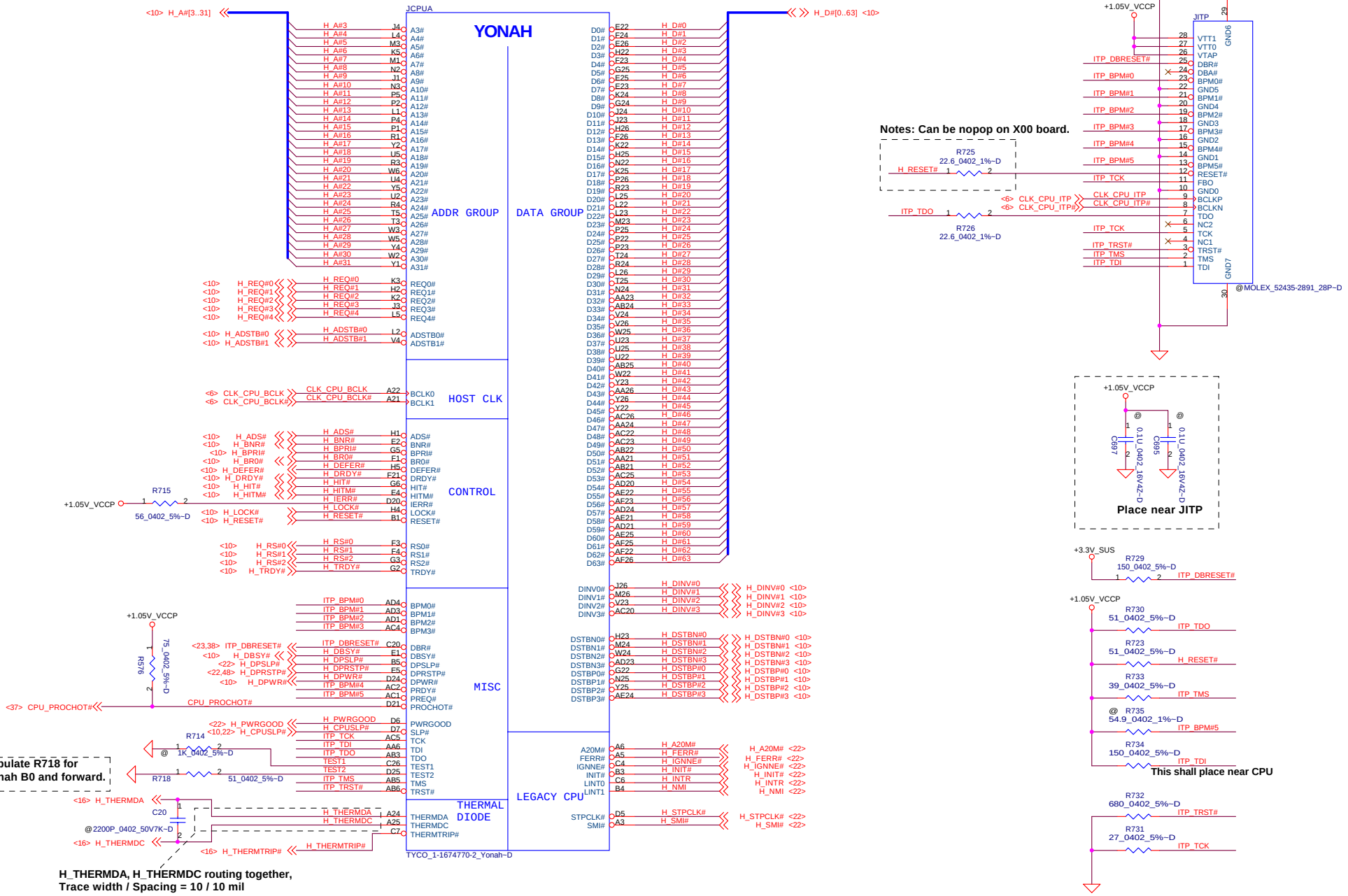

DELL CONFIDENTIAL/PROPRIETARY

PROPRIETARY NOTE: THIS SHEET OF ENGINEERING DRAWING AND SPECIFICATIONS CONTAINS CONFIDENTIAL TRADE SECRET AND OTHER PROPRIETARY INFORMATION OF DELL INC. ("DELL") THIS DOCUMENT MAY NOT BE TRANSFERRED OR COPIED WITHOUT THE EXPRESS WRITTEN AUTHORIZATION OF DELL. IN ADDITION, NEITHER THIS SHEET NOR THE INFORMATION IT CONTAINS WAY BE USED BY OR DISCLOSED TO ANY THIRD PARTY WITHOUT DELL'S EXPRESS WRITTEN CONSENT.

Compal Electronics, Inc.	
Title	Yonah Processor(1/2)
Size	Document Number: LA-2881P
Rev	2.0
Date: Tuesday, December 13, 2005	Sheet 7 of 62

Place R719 and R722 near CPU

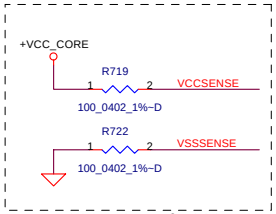

Route VCCSENSE and VSSSENSE trace at 27.4 ohms, 50 mils spacing and 1 inch (max)

Length match within 25 mils

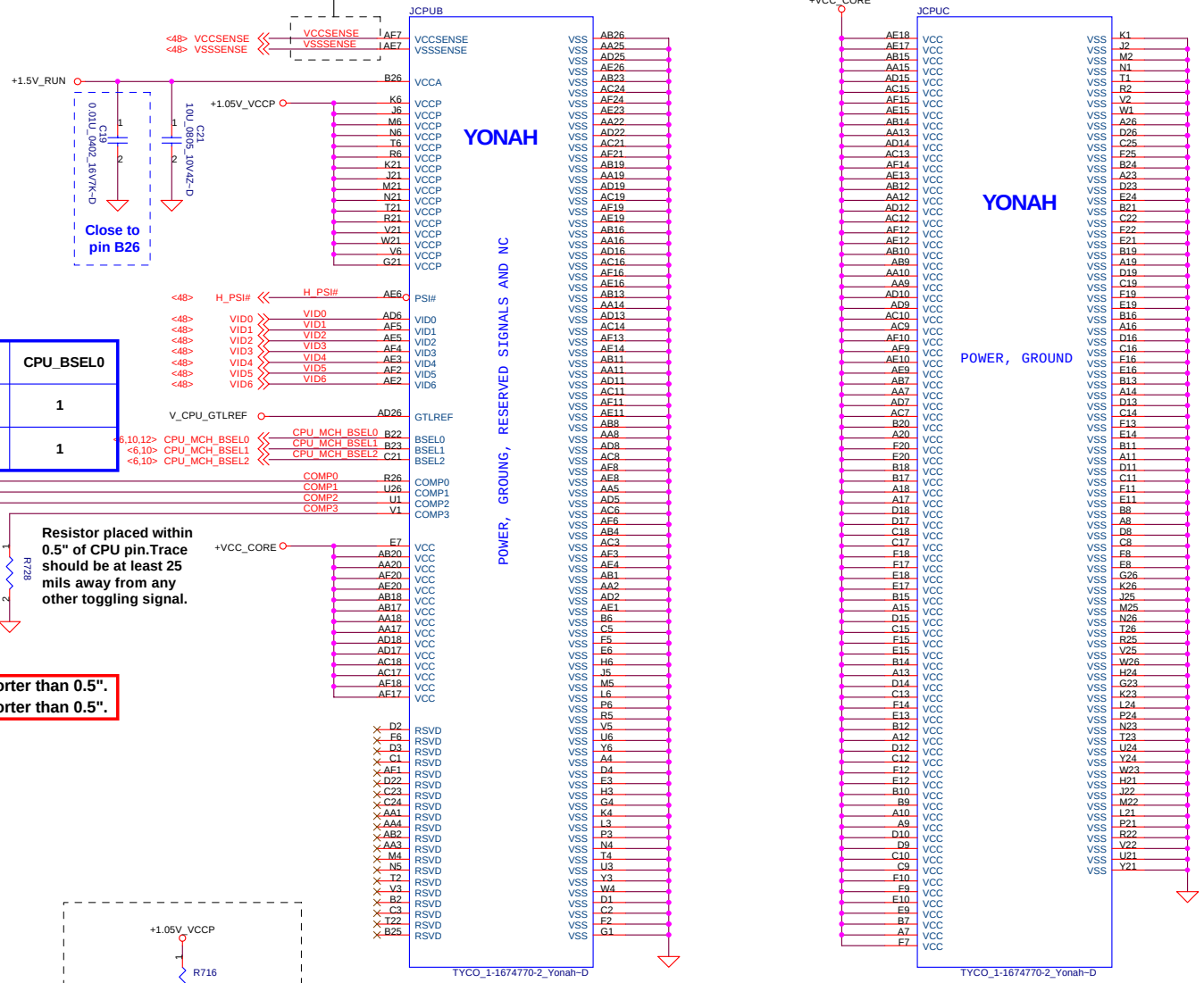

CPU_BSEL	CPU_BSEL2	CPU_BSEL1	CPU_BSEL0
133	0	0	1
166	0	1	1

Resistor placed within 0.5" of CPU pin.Trace should be at least 25 mils away from any other toggling signal.

Layout Note:

COMP0,2 connect with Z0=27.4 ohm, make trace length shorter than 0.5".
COMP1,3 connect with Z0=55.5 ohm, make trace length shorter than 0.5".

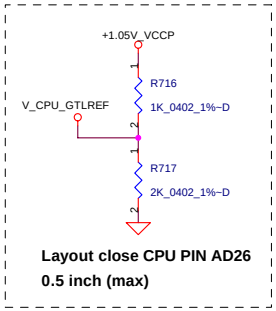

Layout close CPU PIN AD26 0.5 inch (max)

PROPRIETARY NOTE: THIS SHEET OF ENGINEERING DRAWING AND SPECIFICATIONS CONTAINS CONFIDENTIAL TRADE SECRET AND OTHER PROPRIETARY INFORMATION OF DELL INC. ("DELL") THIS DOCUMENT MAY NOT BE TRANSFERRED OR COPIED WITHOUT THE EXPRESS WRITTEN AUTHORIZATION OF DELL. IN ADDITION, NEITHER THIS SHEET NOR THE INFORMATION IT CONTAINS WAY BE USED BY OR DISCLOSED TO ANY THIRD PARTY WITHOUT DELL'S EXPRESS WRITTEN CONSENT.

DELL CONFIDENTIAL/PROPRIETARY

Compal Electronics, Inc.

Title: Yonah Processor(2/2)

Size: | Document Number: LA-2881P | Rev: 2.0

Date: Tuesday, December 13, 2005 | Sheet 8 of 62

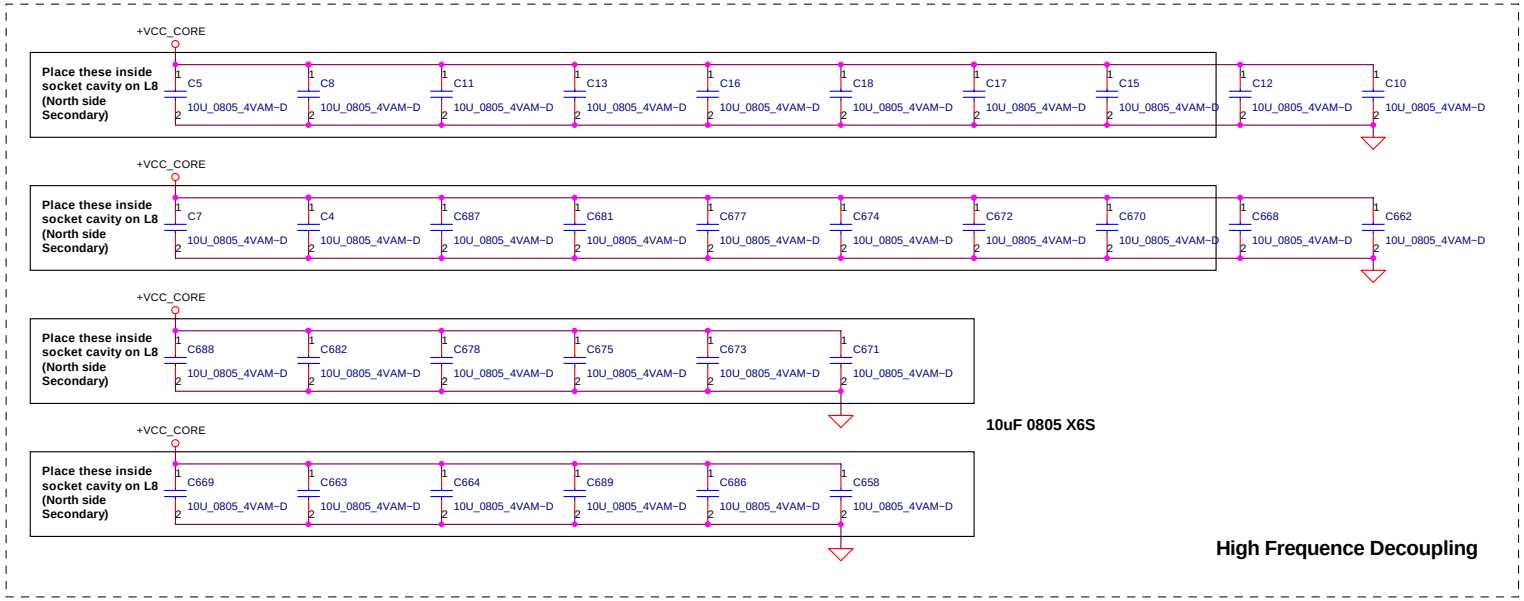

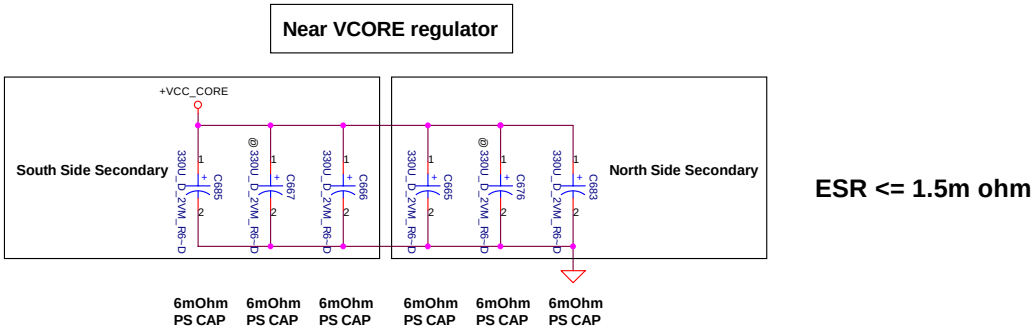

ESR <= 1.5m ohm

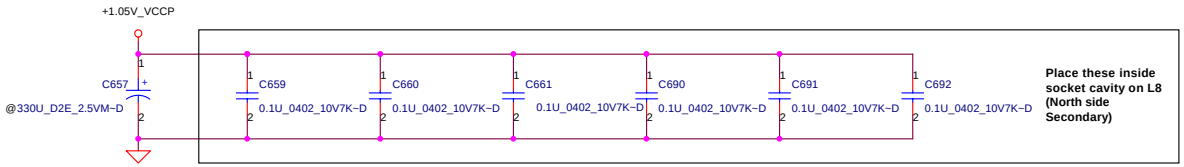

CRB was 270uF

DELL CONFIDENTIAL/PROPRIETARY

PROPRIETARY NOTE: THIS SHEET OF ENGINEERING DRAWING AND SPECIFICATIONS CONTAINS CONFIDENTIAL TRADE SECRET AND OTHER PROPRIETARY INFORMATION OF DELL INC. ("DELL") THIS DOCUMENT MAY NOT BE TRANSFERRED OR COPIED WITHOUT THE EXPRESS WRITTEN AUTHORIZATION OF DELL. IN ADDITION, NEITHER THIS SHEET NOR THE INFORMATION IT CONTAINS WAY BE USED BY OR DISCLOSED TO ANY THIRD PARTY WITHOUT DELL'S EXPRESS WRITTEN CONSENT.

Compal Electronics, Inc.
Title: CPU Bypass
Size: Document Number: LA-2881P
Rev 2.0
Date: Tuesday, December 13, 2005
Sheet 9 of 62

ZUMA use 945GM (P/N: SA0000059GL)
ZRS use 945PM (P/N: SA00000KDBL)

Description at page12
Note :
CFG3:17 has internal pullup,
CFG18:19 has internal pulldown

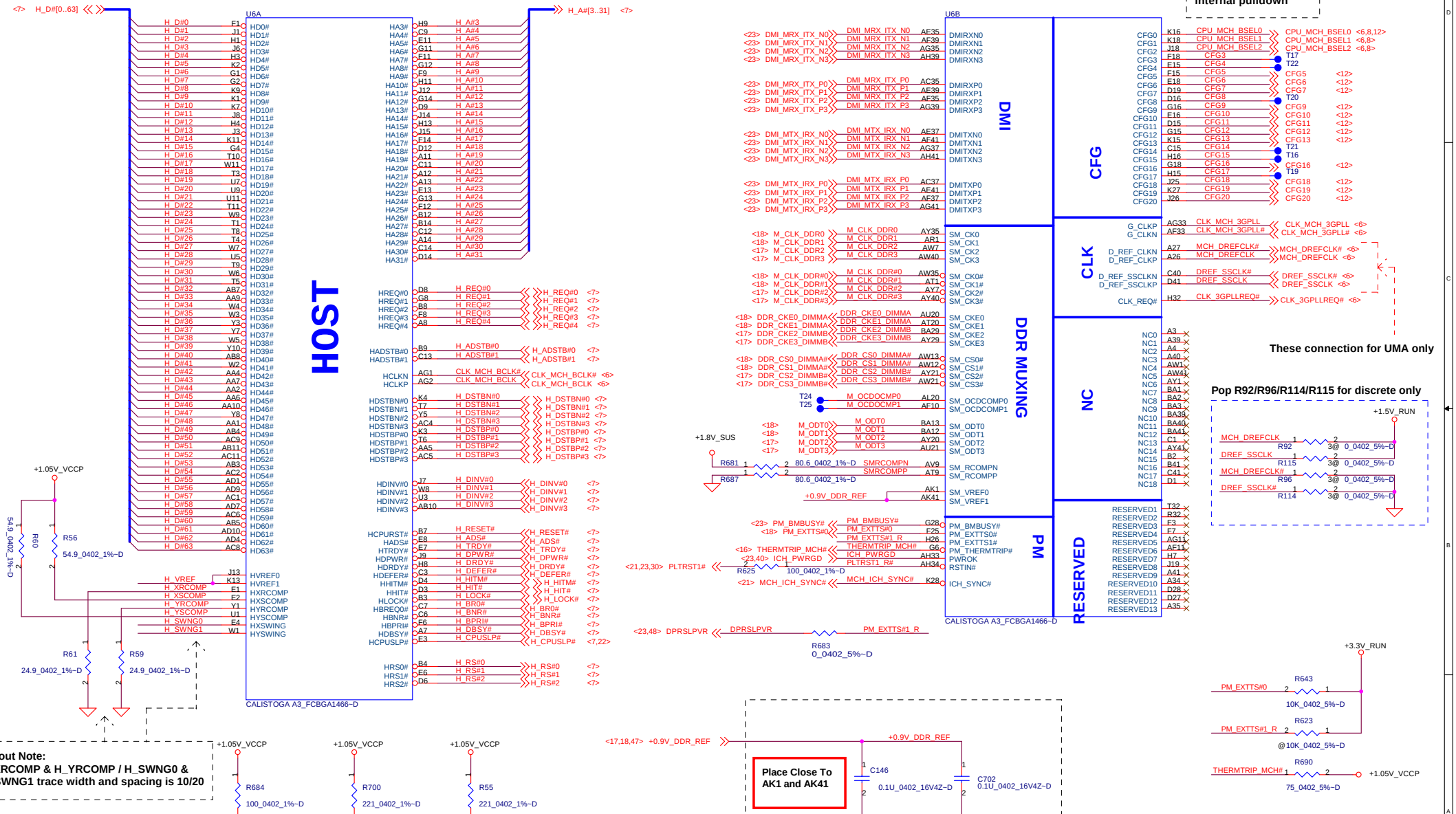

DELL CONFIDENTIAL/PROPRIETARY

Compal Electronics, Inc.

Title: Calistoga(1 of 6)

Size: | Document Number: LA-2881P | Rev: 2.0

Date: Tuesday, December 13, 2005 | Sheet 10 of 62

PROPRIETARY NOTE: THIS SHEET OF ENGINEERING DRAWING AND SPECIFICATIONS CONTAINS CONFIDENTIAL TRADE SECRET AND OTHER PROPRIETARY INFORMATION OF DELL INC. ("DELL") THIS DOCUMENT MAY NOT BE TRANSFERRED OR COPIED WITHOUT THE EXPRESS WRITTEN AUTHORIZATION OF DELL. IN ADDITION, NEITHER THIS SHEET NOR THE INFORMATION IT CONTAINS WAY BE USED BY OR DISCLOSED TO ANY THIRD PARTY WITHOUT DELL'S EXPRESS WRITTEN CONSENT.

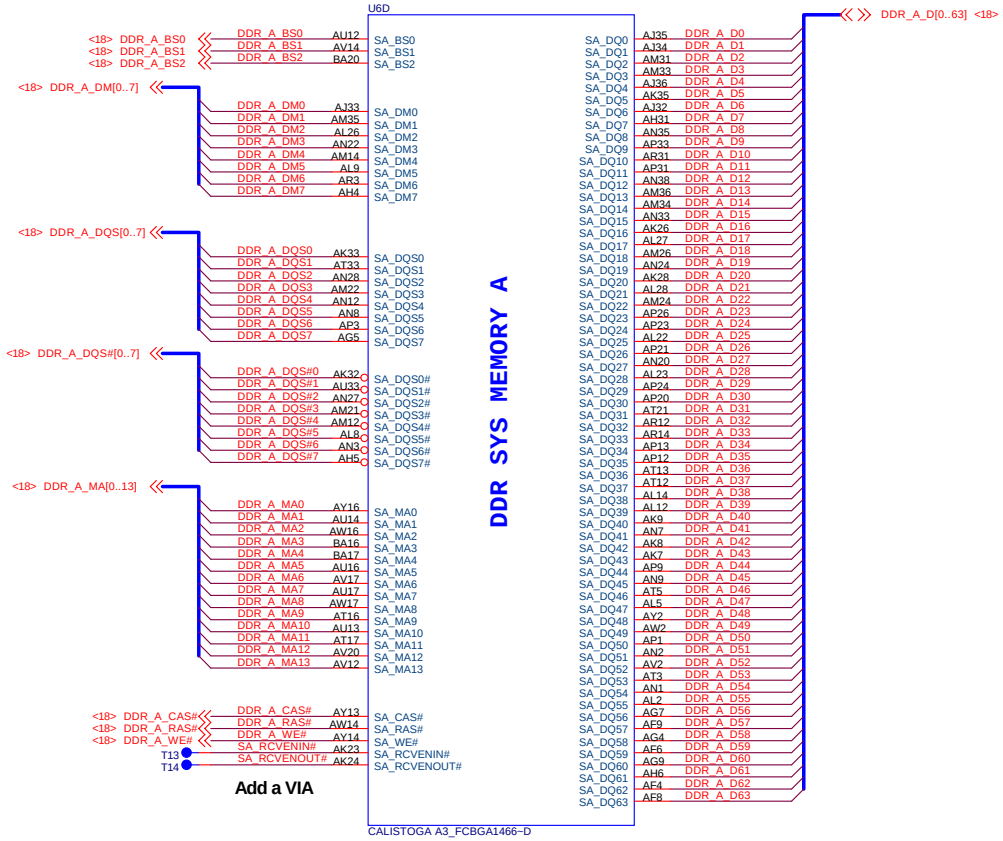

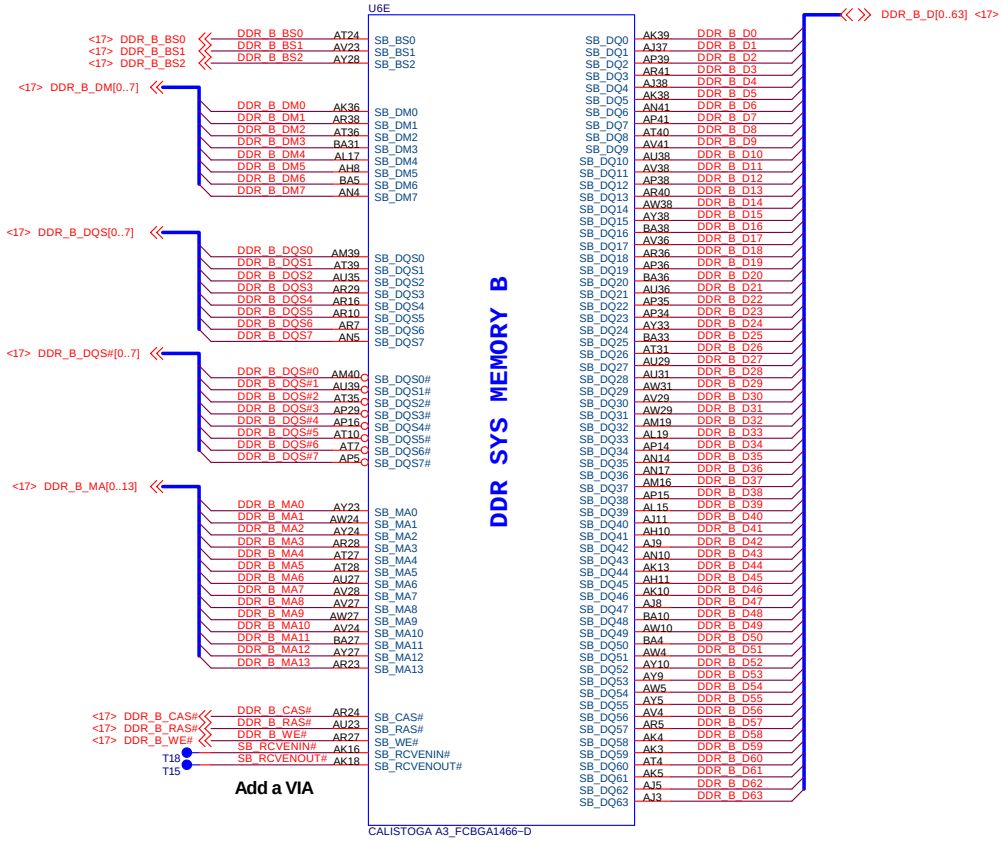

PROPRIETARY NOTE: THIS SHEET OF ENGINEERING DRAWING AND SPECIFICATIONS CONTAINS CONFIDENTIAL TRADE SECRET AND OTHER PROPRIETARY INFORMATION OF DELL INC. ("DELL") THIS DOCUMENT MAY NOT BE TRANSFERRED OR COPIED WITHOUT THE EXPRESS WRITTEN AUTHORIZATION OF DELL. IN ADDITION, NEITHER THIS SHEET NOR THE INFORMATION IT CONTAINS WAY BE USED BY OR DISCLOSED TO ANY THIRD PARTY WITHOUT DELL'S EXPRESS WRITTEN CONSENT.

DELL CONFIDENTIAL/PROPRIETARY

Compal Electronics, Inc.

Title: **Calistogo(2 of 6)**

Size | Document Number: **LA-2881P** | Rev 2.0

Date: Tuesday, December 13, 2005 | Sheet 11 of 62

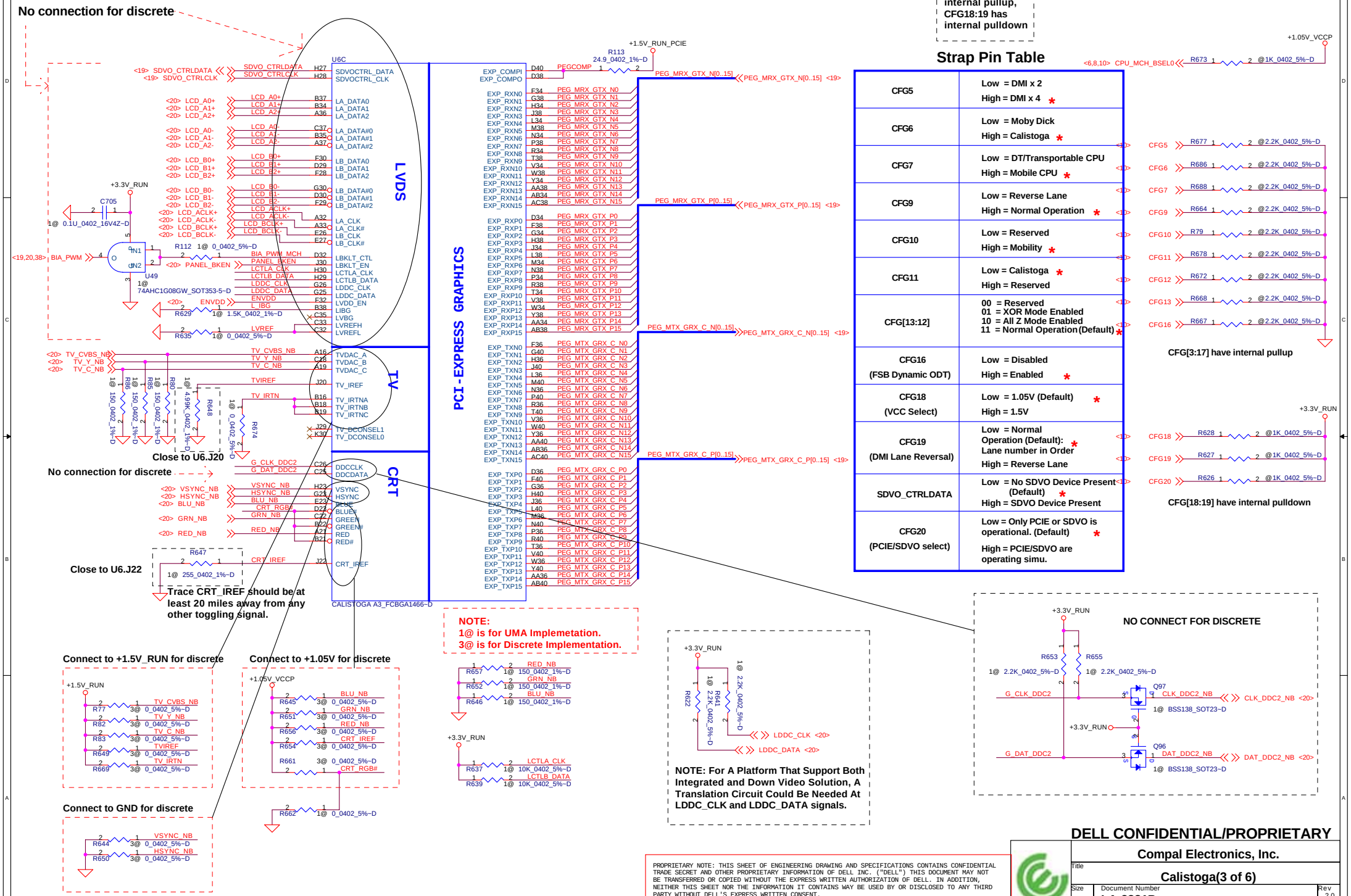

CFG5	Low = DMI x 2 High = DMI x 4 *
CFG6	Low = Moby Dick High = Calistoga *
CFG7	Low = DT/Transportable CPU High = Mobile CPU *
CFG9	Low = Reverse Lane High = Normal Operation *
CFG10	Low = Reserved High = Mobility *
CFG11	Low = Calistoga * High = Reserved
CFG[13:12]	00 = Reserved 01 = XOR Mode Enabled 10 = All Z Mode Enabled 11 = Normal Operation(Default) *
CFG16 (FSB Dynamic ODT)	Low = Disabled High = Enabled *
CFG18 (VCC Select)	Low = 1.05V (Default) * High = 1.5V
CFG19 (DMI Lane Reversal)	Low = Normal Operation (Default): * Lane number in Order High = Reverse Lane
SDVO_CTRLDATA	Low = No SDVO Device Present (Default) * High = SDVO Device Present
CFG20 (PCIE/SDVO select)	Low = Only PCIE or SDVO is operational. (Default) * High = PCIE/SDVO are operating simu.

DELL CONFIDENTIAL/PROPRIETARY

PROPRIETARY NOTE: THIS SHEET OF ENGINEERING DRAWING AND SPECIFICATIONS CONTAINS CONFIDENTIAL TRADE SECRET AND OTHER PROPRIETARY INFORMATION OF DELL INC. ("DELL") THIS DOCUMENT MAY NOT BE TRANSFERRED OR COPIED WITHOUT THE EXPRESS WRITTEN AUTHORIZATION OF DELL. IN ADDITION, NEITHER THIS SHEET NOR THE INFORMATION IT CONTAINS WAY BE USED BY OR DISCLOSED TO ANY THIRD PARTY WITHOUT DELL'S EXPRESS WRITTEN CONSENT.

Compal Electronics, Inc.

Title: Calistoga(3 of 6)

Size | Document Number: LA-2881P | Rev 2.0

Date: Tuesday, December 13, 2005 | Sheet 12 of 62

+3V_TVDAC

NOTE:
1@ is for UMA Implemetation.
3@ is for Discrete Implementation.

Should be placed on same side. No Vias.

W=30 mils

Route +2.5V_RUN from GMCH pinG41 to decoupling cap(C567)<200mil to the edge

CRTDAC: Route caps within 250mil of GMCH. Route FB within 3" of Calistoga

Route VSSACRTDAC gnd from GMCH to decoupling cap ground lead and then connect to the gnd plane.

Route VSSA_TVBG GND from GMCH to decoupling cap ground lead and then connect to the GND plane.

NOTE:
Follow Intel Layout Guideline toplace 4.7uF, 10uF, 22uF, 0.1uF and 22nF within 250 mils from Calistoga.

C630, C617, C611, C627, C703, C704, C707 replace by 0 ohm 0805 resistor

CRB 270uF

close pin A6

close pin D2/AB1

close pin A38

close pin B30/C30/A30

10uF should be placed in cavity

L54, L53 use 0_0805_5% resistor for Int. VGA as Travis.

Note : C588, C564 No stuff for Ext. VGA. Stuff for Int. VGA.

0.1uF should be placed < 200 mils within its pins

Refer to the latest Intel layout check list for Calistoga de-couping capacitors layout placement
4.7uF, 10uF and 22uF should be placed < 500 mils within its pins
0.1uF should be placed < 200 mils within its pins
22nF should be placed within its pins

NOTE: Populate D4, R54, D2 and R52 for UMA Implemetation.

CRT DAC Voltge Follower Circuit - 700mV

TV DAC Voltge Follower Circuit - 700mV

PROPRIETARY NOTE: THIS SHEET OF ENGINEERING DRAWING AND SPECIFICATIONS CONTAINS CONFIDENTIAL TRADE SECRET AND OTHER PROPRIETARY INFORMATION OF DELL INC. ("DELL") THIS DOCUMENT MAY NOT BE TRANSFERRED OR COPIED WITHOUT THE EXPRESS WRITTEN AUTHORIZATION OF DELL. IN ADDITION, NEITHER THIS SHEET NOR THE INFORMATION IT CONTAINS WAY BE USED BY OR DISCLOSED TO ANY THIRD PARTY WITHOUT DELL'S EXPRESS WRITTEN CONSENT.

DELL CONFIDENTIAL/PROPRIETARY
Compal Electronics, Inc.
Title: Calistoga(4 of 6)
Size: Document Number: LA-2881P
Rev: 2.0
Date: Tuesday, December 13, 2005
Sheet 13 of 62

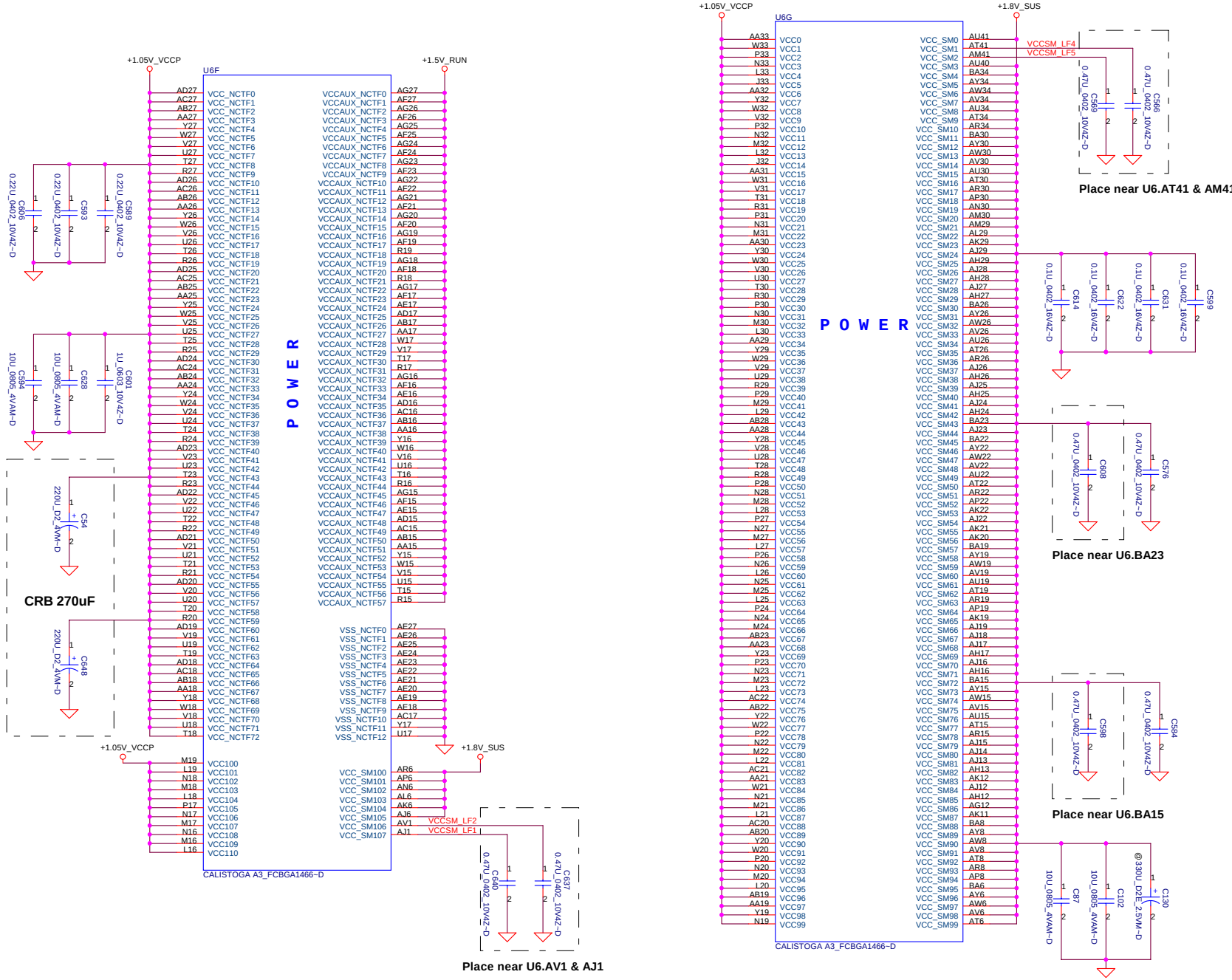

DELL CONFIDENTIAL/PROPRIETARY

PROPRIETARY NOTE: THIS SHEET OF ENGINEERING DRAWING AND SPECIFICATIONS CONTAINS CONFIDENTIAL TRADE SECRET AND OTHER PROPRIETARY INFORMATION OF DELL INC. ("DELL") THIS DOCUMENT MAY NOT BE TRANSFERRED OR COPIED WITHOUT THE EXPRESS WRITTEN AUTHORIZATION OF DELL. IN ADDITION, NEITHER THIS SHEET NOR THE INFORMATION IT CONTAINS WAY BE USED BY OR DISCLOSED TO ANY THIRD PARTY WITHOUT DELL'S EXPRESS WRITTEN CONSENT.

Compal Electronics, Inc.		
Title: Calistoga(5 of 6)		
Size	Document Number: LA-2881P	Rev 2.0
Date: Tuesday, December 13, 2005	Sheet 14 of 62	

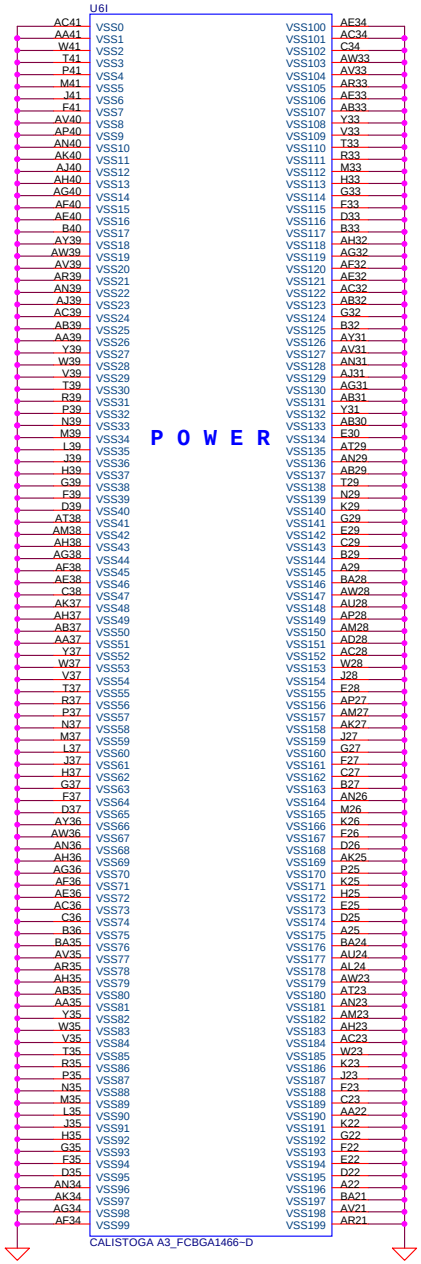

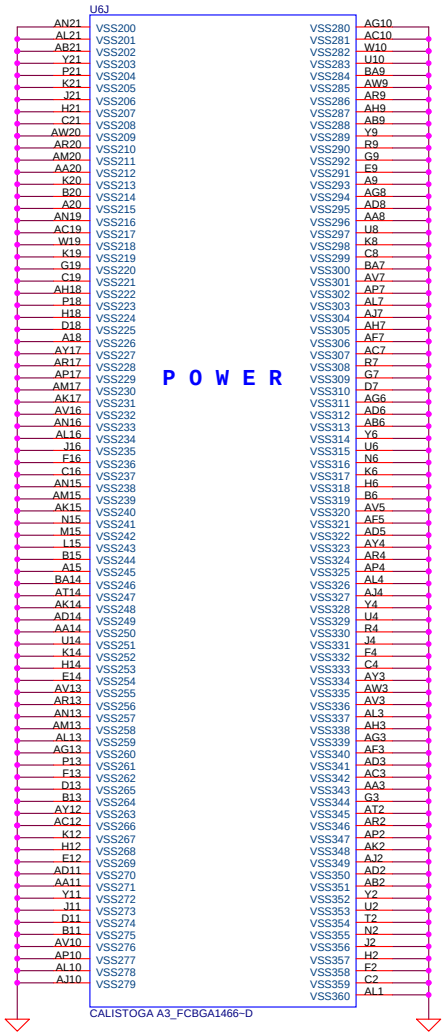

DELL CONFIDENTIAL/PROPRIETARY

PROPRIETARY NOTE: THIS SHEET OF ENGINEERING DRAWING AND SPECIFICATIONS CONTAINS CONFIDENTIAL TRADE SECRET AND OTHER PROPRIETARY INFORMATION OF DELL INC. ("DELL") THIS DOCUMENT MAY NOT BE TRANSFERRED OR COPIED WITHOUT THE EXPRESS WRITTEN AUTHORIZATION OF DELL. IN ADDITION, NEITHER THIS SHEET NOR THE INFORMATION IT CONTAINS WAY BE USED BY OR DISCLOSED TO ANY THIRD PARTY WITHOUT DELL'S EXPRESS WRITTEN CONSENT.

Compal Electronics, Inc.

Title: **Calistoga(6 of 6)**

Size | Document Number: **LA-2881P** | Rev: 2.0

Date: Tuesday, December 13, 2005 | Sheet 15 of 62

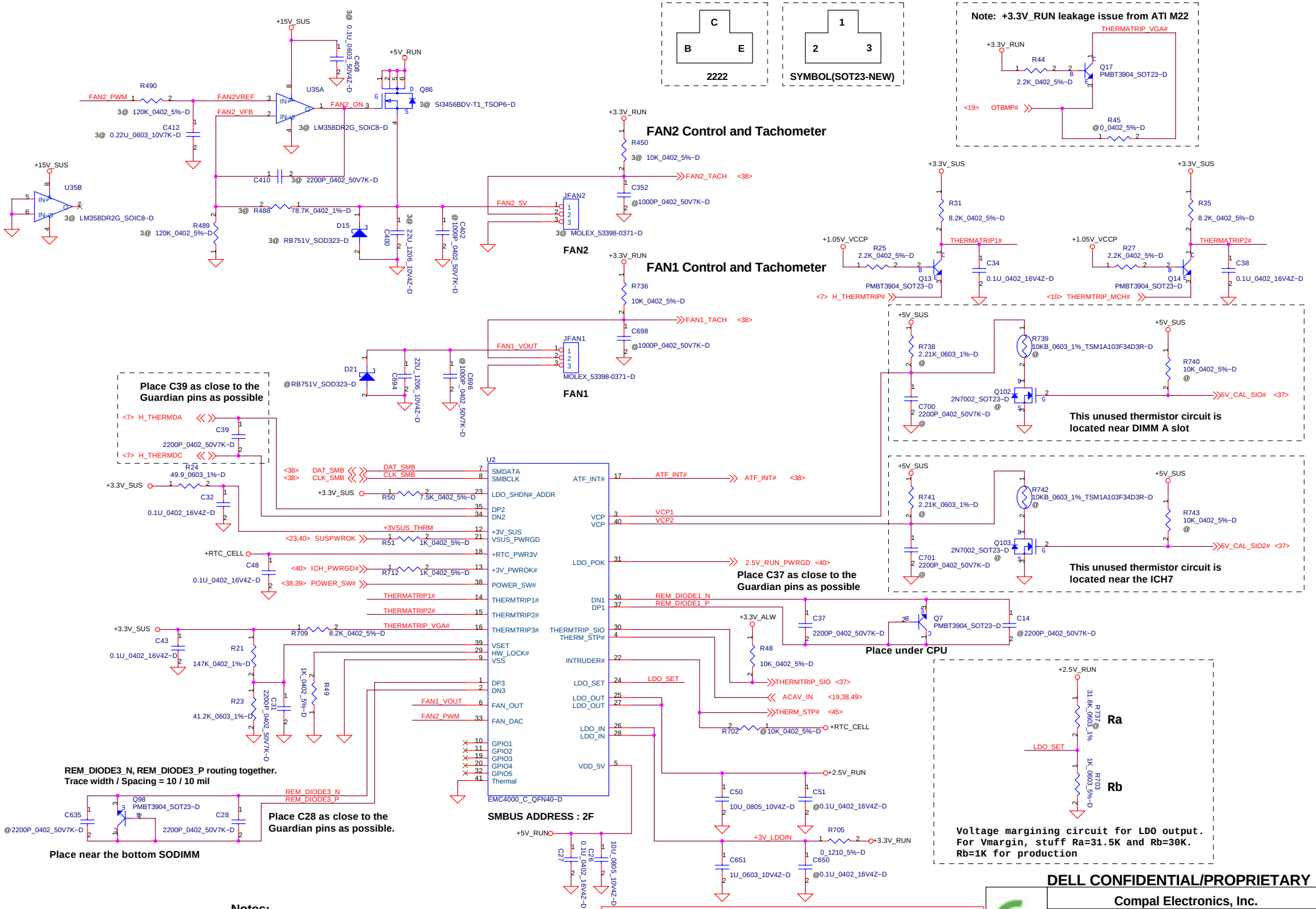
FAN2 Control and Tachometer
FAN1 Control and Tachometer
Note: +3.3V_RUN leakage issue from ATI M22
2222
SYMBOL(SOT23-NEW)
Place C39 as close to the Guardian pins as possible
Place C37 as close to the Guardian pins as possible
Place under CPU
This unused thermistor circuit is located near DIMM A slot
This unused thermistor circuit is located near the ICH7
REM_DIODE3_N, REM_DIODE3_P routing together.
Trace width / Spacing = 10 / 10 mil
Place C28 as close to the Guardian pins as possible.
Place near the bottom SODIMM
SMBUS ADDRESS : 2F
Ra
Rb
Voltage margining circuit for LDO output.
For Vmargin, stuff Ra=31.5K and Rb=30K.
Rb=1K for production
Notes:
"Solder thermal pad to plane. Add 9 ground vias to pad."
DELL CONFIDENTIAL/PROPRIETARY
Compal Electronics, Inc.
Title
Thermal sensor and Fan
Size
Document Number
LA-2881P
Rev
2.0
Date: Tuesday, December 13, 2005
Sheet 16 of 62

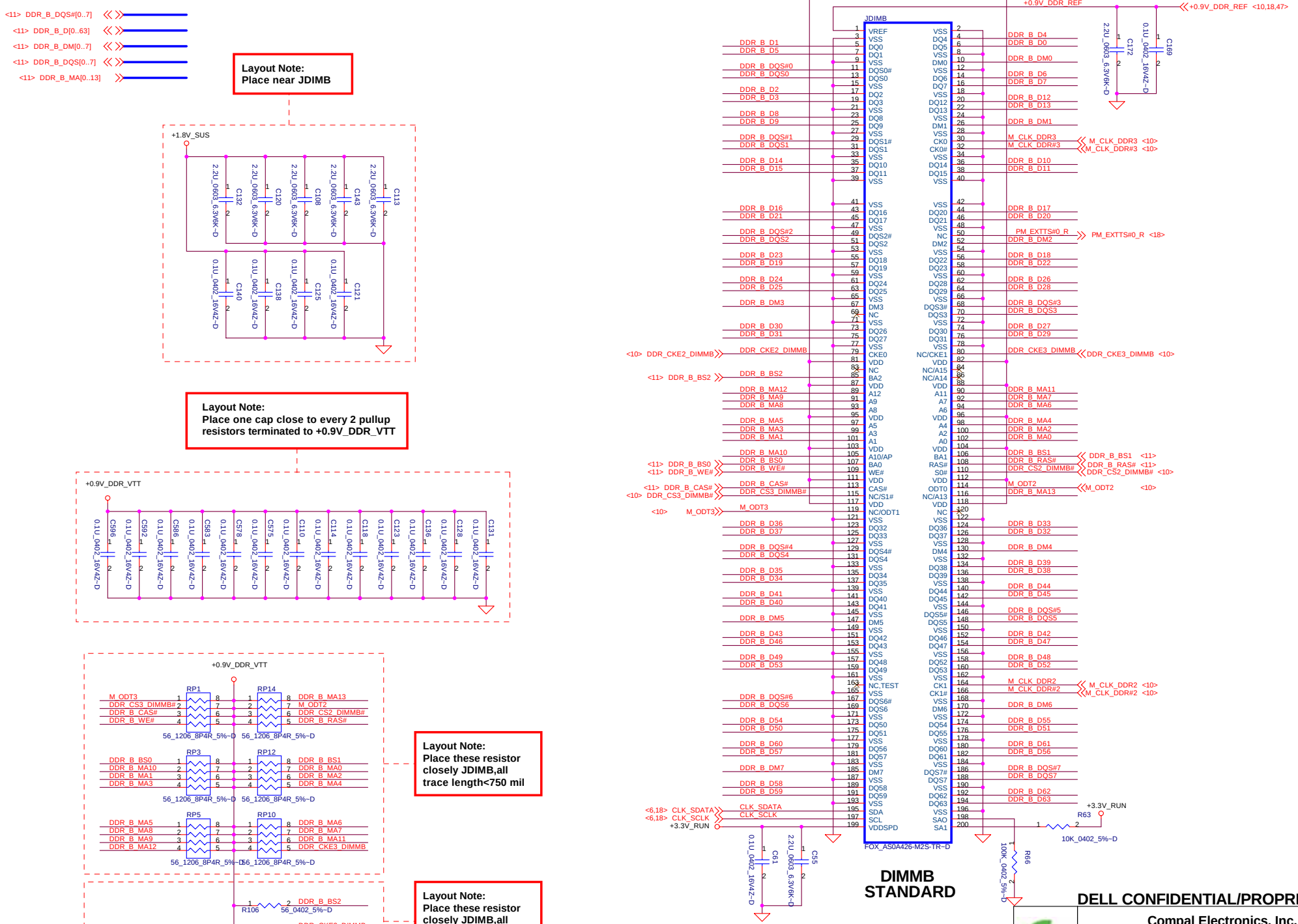

PROPRIETARY NOTE: THIS SHEET OF ENGINEERING DRAWING AND SPECIFICATIONS CONTAINS CONFIDENTIAL TRADE SECRET AND OTHER PROPRIETARY INFORMATION OF DELL INC. ("DELL") THIS DOCUMENT MAY NOT BE TRANSFERRED OR COPIED WITHOUT THE EXPRESS WRITTEN AUTHORIZATION OF DELL. IN ADDITION, NEITHER THIS SHEET NOR THE INFORMATION IT CONTAINS WAY BE USED BY OR DISCLOSED TO ANY THIRD PARTY WITHOUT DELL'S EXPRESS WRITTEN CONSENT.

DELL CONFIDENTIAL/PROPRIETARY

Compal Electronics, Inc.

Title: DDRII-SODIMM SLOT-B

Size: | Document Number: LA-2881P | Rev: 2.0

Date: Tuesday, December 13, 2005 | Sheet 17 of 62

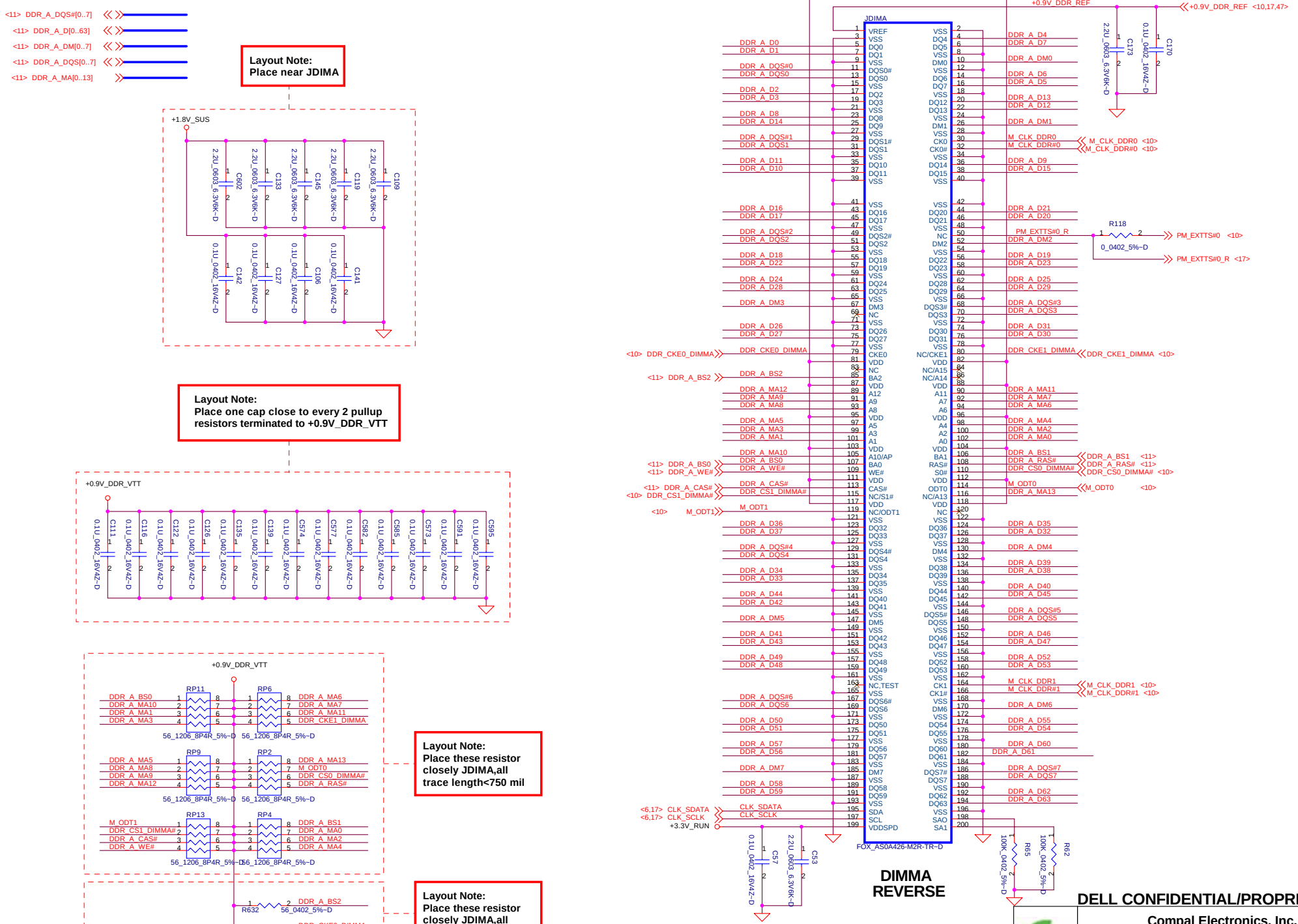

PROPRIETARY NOTE: THIS SHEET OF ENGINEERING DRAWING AND SPECIFICATIONS CONTAINS CONFIDENTIAL TRADE SECRET AND OTHER PROPRIETARY INFORMATION OF DELL INC. ("DELL") THIS DOCUMENT MAY NOT BE TRANSFERRED OR COPIED WITHOUT THE EXPRESS WRITTEN AUTHORIZATION OF DELL. IN ADDITION, NEITHER THIS SHEET NOR THE INFORMATION IT CONTAINS WAY BE USED BY OR DISCLOSED TO ANY THIRD PARTY WITHOUT DELL'S EXPRESS WRITTEN CONSENT.

DELL CONFIDENTIAL/PROPRIETARY

Compal Electronics, Inc.

Title: DDRII-SODIMM SLOT-A

Size: | Document Number: LA-2881P | Rev: 2.0

Date: Tuesday, December 13, 2005 | Sheet 18 of 62

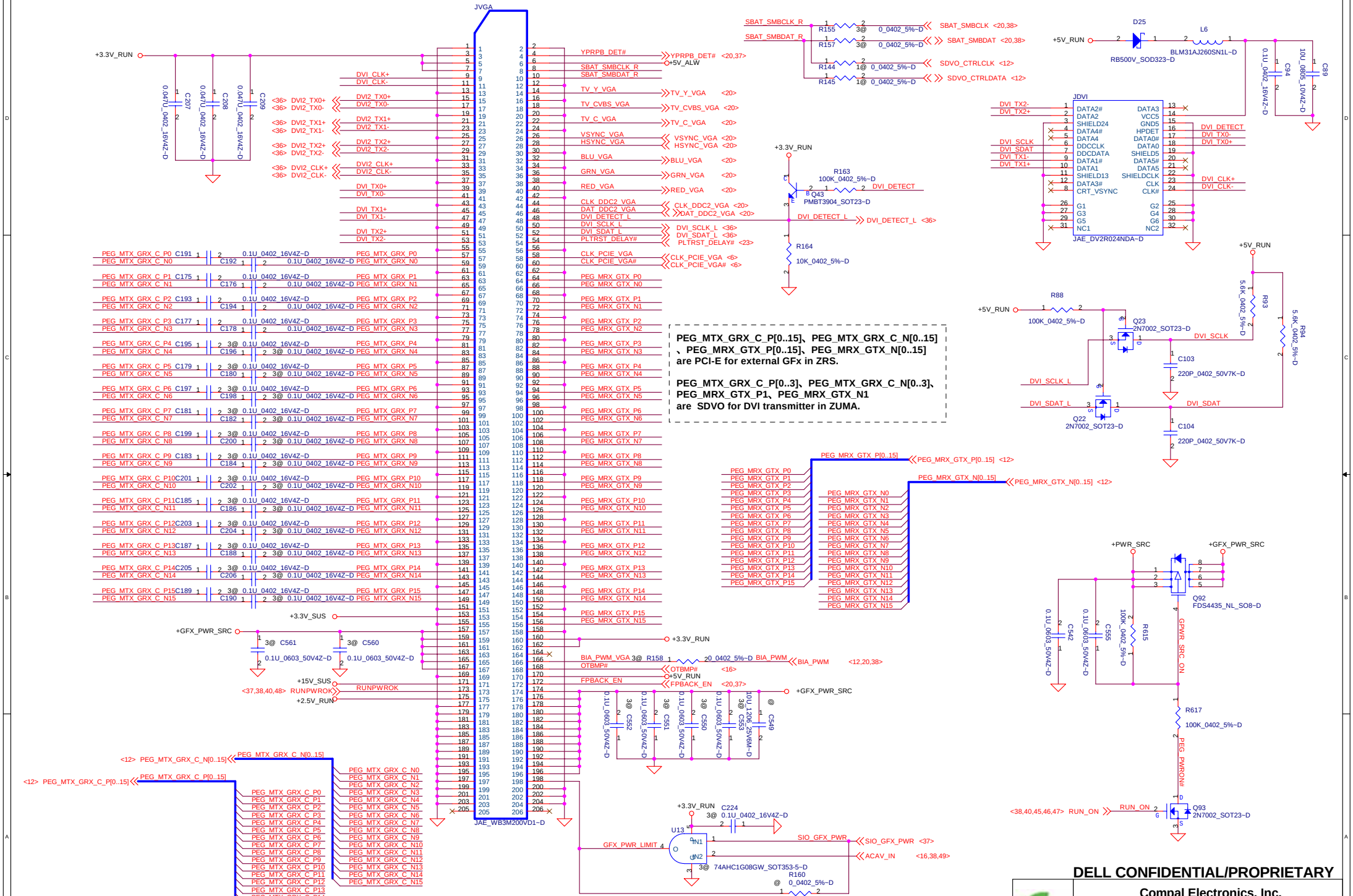

PROPRIETARY NOTE: THIS SHEET OF ENGINEERING DRAWING AND SPECIFICATIONS CONTAINS CONFIDENTIAL TRADE SECRET AND OTHER PROPRIETARY INFORMATION OF DELL INC. ("DELL") THIS DOCUMENT MAY NOT BE TRANSFERRED OR COPIED WITHOUT THE EXPRESS WRITTEN AUTHORIZATION OF DELL. IN ADDITION, NEITHER THIS SHEET NOR THE INFORMATION IT CONTAINS WAY BE USED BY OR DISCLOSED TO ANY THIRD PARTY WITHOUT DELL'S EXPRESS WRITTEN CONSENT.

DELL CONFIDENTIAL/PROPRIETARY

Compal Electronics, Inc.

Title: VGA and DVI connector

Size: | Document Number: LA-2881P | Rev: 2.0

Date: Tuesday, December 13, 2005 | Sheet 19 of 62

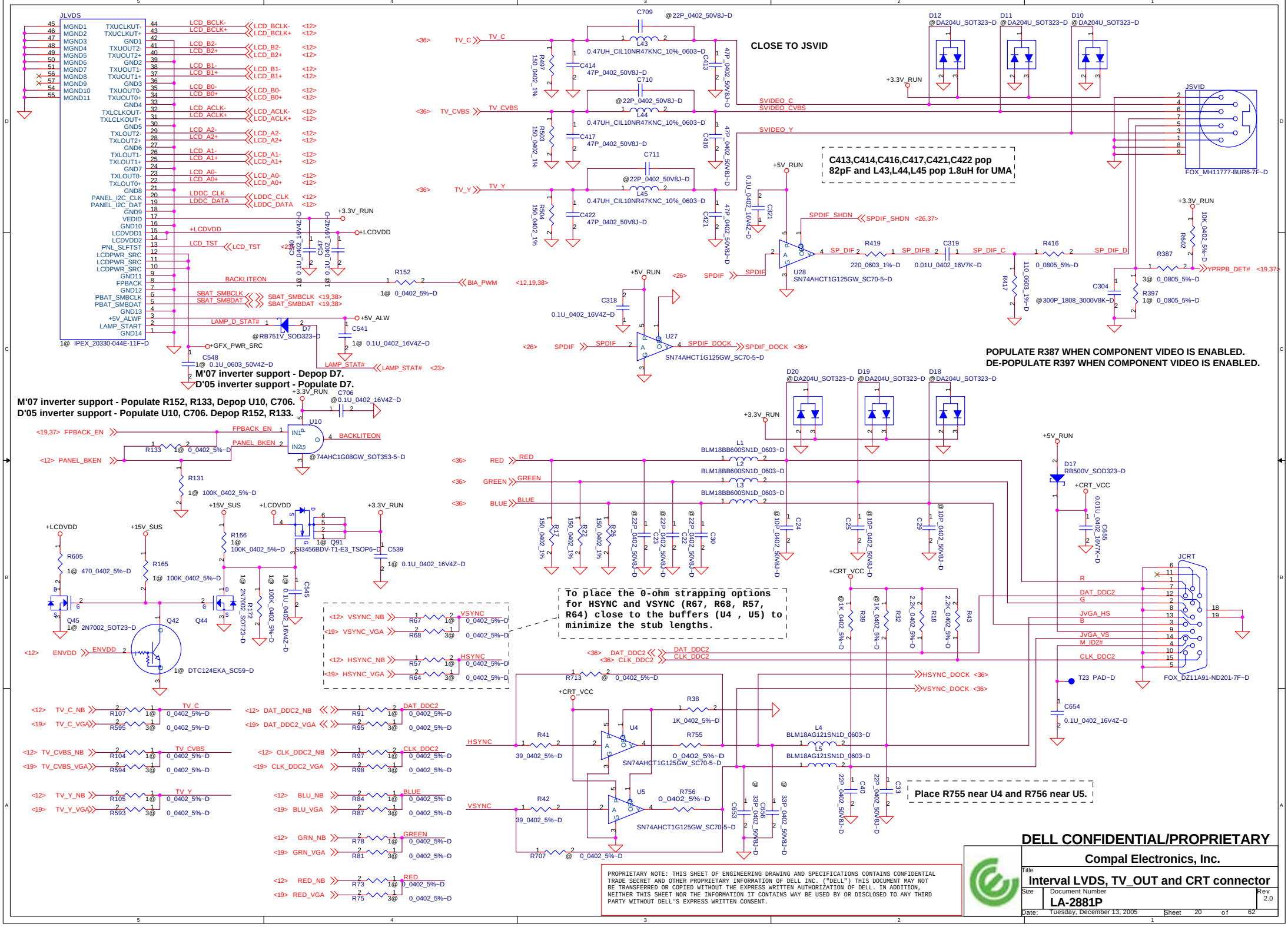

DELL CONFIDENTIAL/PROPRIETARY

Compal Electronics, Inc.

Title: Interval LVDS, TV_OUT and CRT connector

Size: | Document Number: LA-2881P | Rev: 2.0

Date: Tuesday, December 13, 2005 | Sheet 20 of 62

PROPRIETARY NOTE: THIS SHEET OF ENGINEERING DRAWING AND SPECIFICATIONS CONTAINS CONFIDENTIAL TRADE SECRET AND OTHER PROPRIETARY INFORMATION OF DELL INC. ("DELL") THIS DOCUMENT MAY NOT BE TRANSFERRED OR COPIED WITHOUT THE EXPRESS WRITTEN AUTHORIZATION OF DELL. IN ADDITION, NEITHER THIS SHEET NOR THE INFORMATION IT CONTAINS WAY BE USED BY OR DISCLOSED TO ANY THIRD PARTY WITHOUT DELL'S EXPRESS WRITTEN CONSENT.

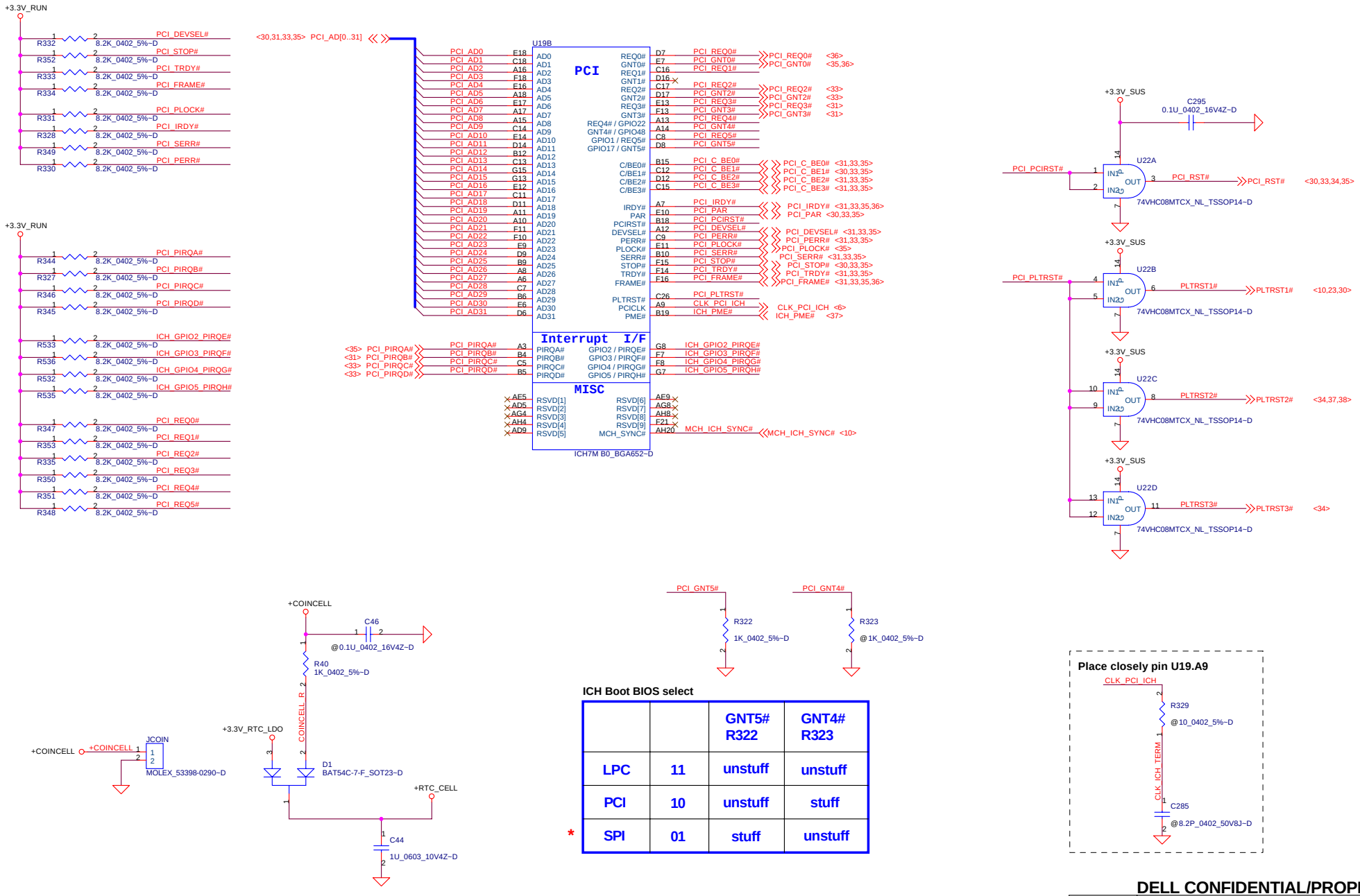

ICH Boot BIOS select

		GNT5# R322	GNT4# R323
LPC	11	unstuff	unstuff
PCI	10	unstuff	stuff
* SPI	01	stuff	unstuff

PROPRIETARY NOTE: THIS SHEET OF ENGINEERING DRAWING AND SPECIFICATIONS CONTAINS CONFIDENTIAL TRADE SECRET AND OTHER PROPRIETARY INFORMATION OF DELL INC. ("DELL") THIS DOCUMENT MAY NOT BE TRANSFERRED OR COPIED WITHOUT THE EXPRESS WRITTEN AUTHORIZATION OF DELL. IN ADDITION, NEITHER THIS SHEET NOR THE INFORMATION IT CONTAINS WAY BE USED BY OR DISCLOSED TO ANY THIRD PARTY WITHOUT DELL'S EXPRESS WRITTEN CONSENT.

DELL CONFIDENTIAL/PROPRIETARY

Compal Electronics, Inc.

Title: ICH7-M(1/4)

Size | Document Number: LA-2881P | Rev 2.0

Date: Tuesday, December 13, 2005 | Sheet 21 of 62

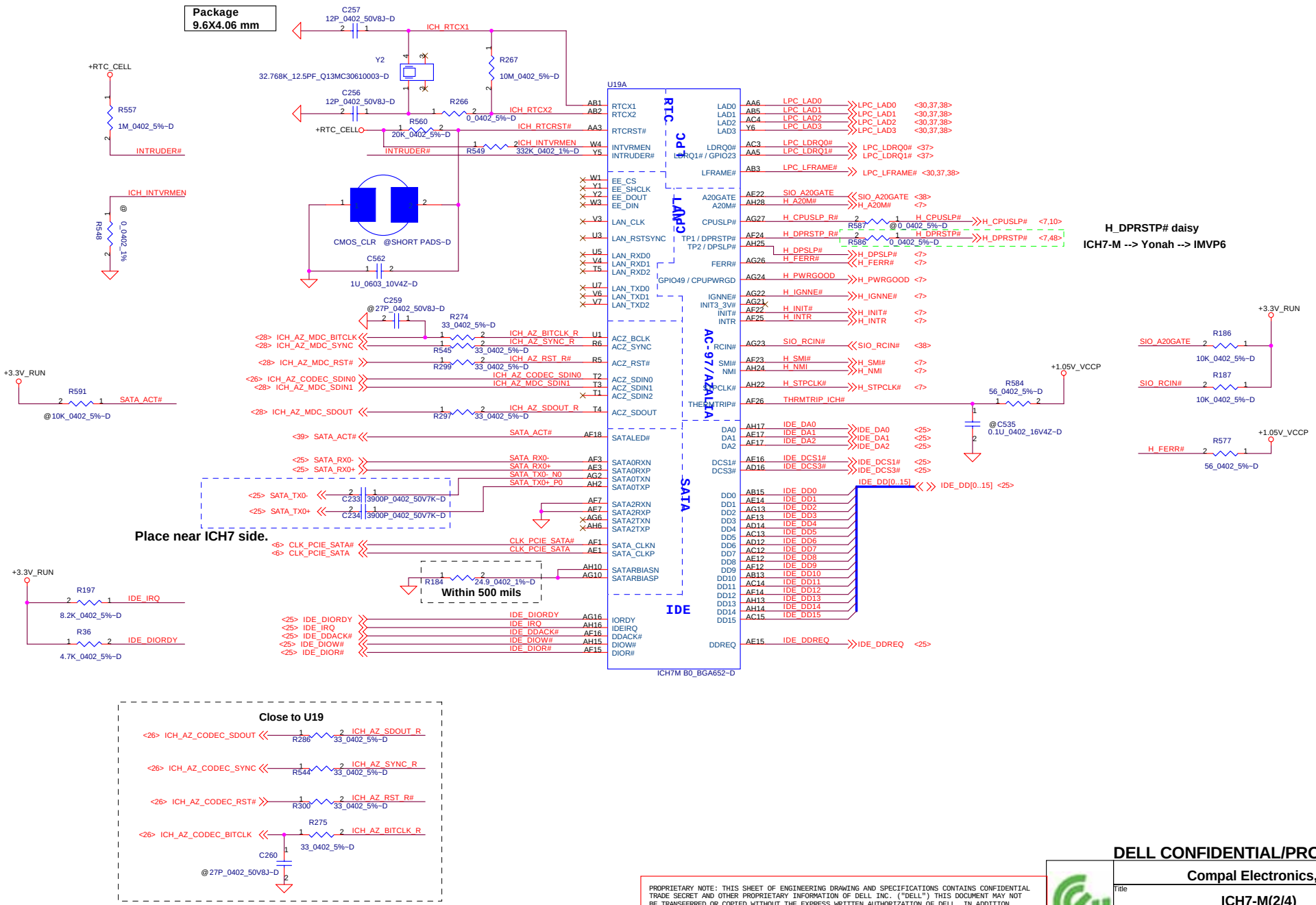

PROPRIETARY NOTE: THIS SHEET OF ENGINEERING DRAWING AND SPECIFICATIONS CONTAINS CONFIDENTIAL TRADE SECRET AND OTHER PROPRIETARY INFORMATION OF DELL INC. ("DELL") THIS DOCUMENT MAY NOT BE TRANSFERRED OR COPIED WITHOUT THE EXPRESS WRITTEN AUTHORIZATION OF DELL. IN ADDITION, NEITHER THIS SHEET NOR THE INFORMATION IT CONTAINS WAY BE USED BY OR DISCLOSED TO ANY THIRD PARTY WITHOUT DELL'S EXPRESS WRITTEN CONSENT.

DELL CONFIDENTIAL/PROPRIETARY

Compal Electronics, Inc.

Title: ICH7-M(2/4)

Size | Document Number: LA-2881P | Rev: 2.0

Date: Tuesday, December 13, 2005 | Sheet 22 of 62

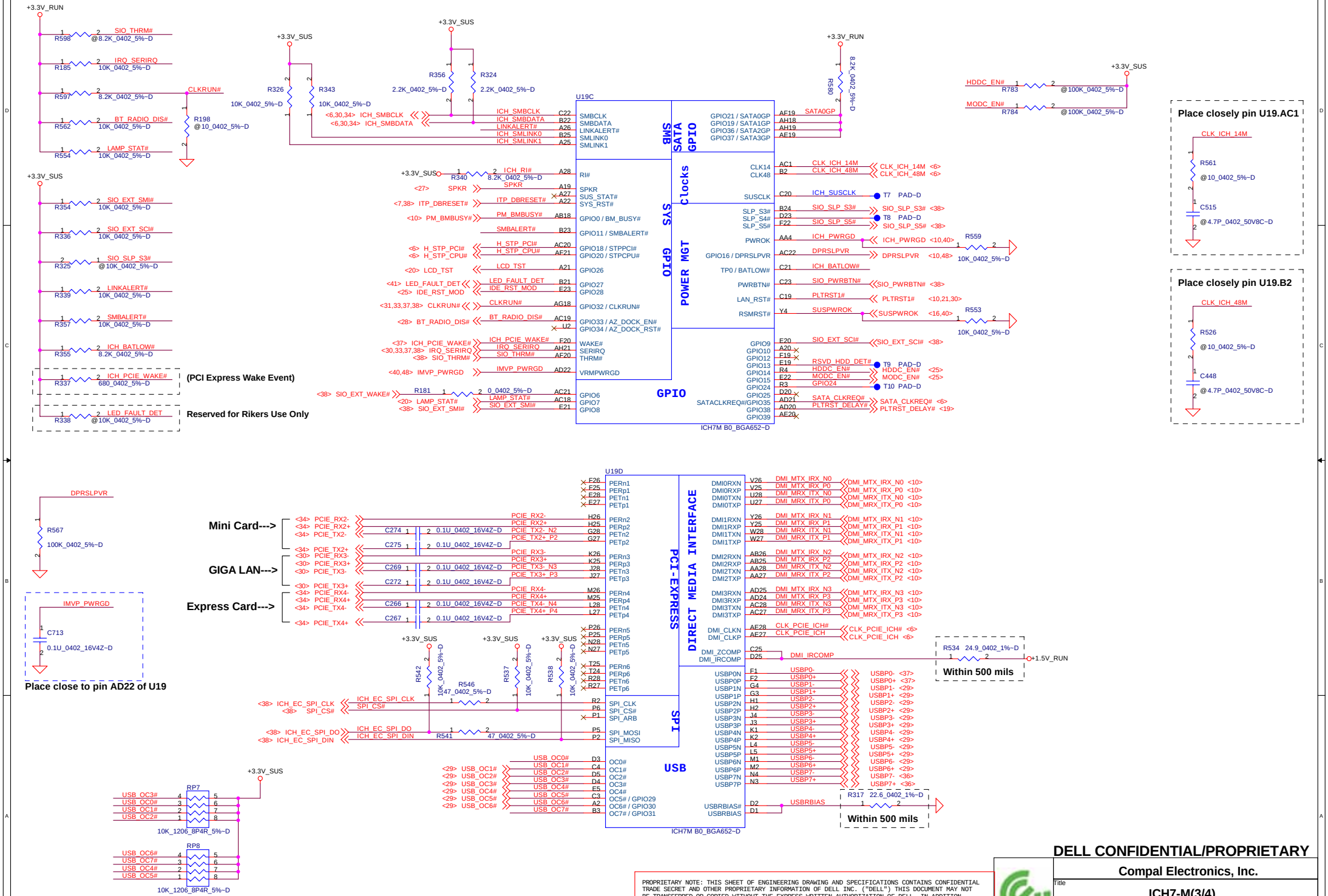

DELL CONFIDENTIAL/PROPRIETARY

PROPRIETARY NOTE: THIS SHEET OF ENGINEERING DRAWING AND SPECIFICATIONS CONTAINS CONFIDENTIAL TRADE SECRET AND OTHER PROPRIETARY INFORMATION OF DELL INC. ("DELL") THIS DOCUMENT MAY NOT BE TRANSFERRED OR COPIED WITHOUT THE EXPRESS WRITTEN AUTHORIZATION OF DELL. IN ADDITION, NEITHER THIS SHEET NOR THE INFORMATION IT CONTAINS WAY BE USED BY OR DISCLOSED TO ANY THIRD PARTY WITHOUT DELL'S EXPRESS WRITTEN CONSENT.

Compal Electronics, Inc.

Title: ICH7-M(3/4)

Size | Document Number: LA-2881P | Rev: 2.0

Date: Tuesday, December 13, 2005 | Sheet 23 of 62

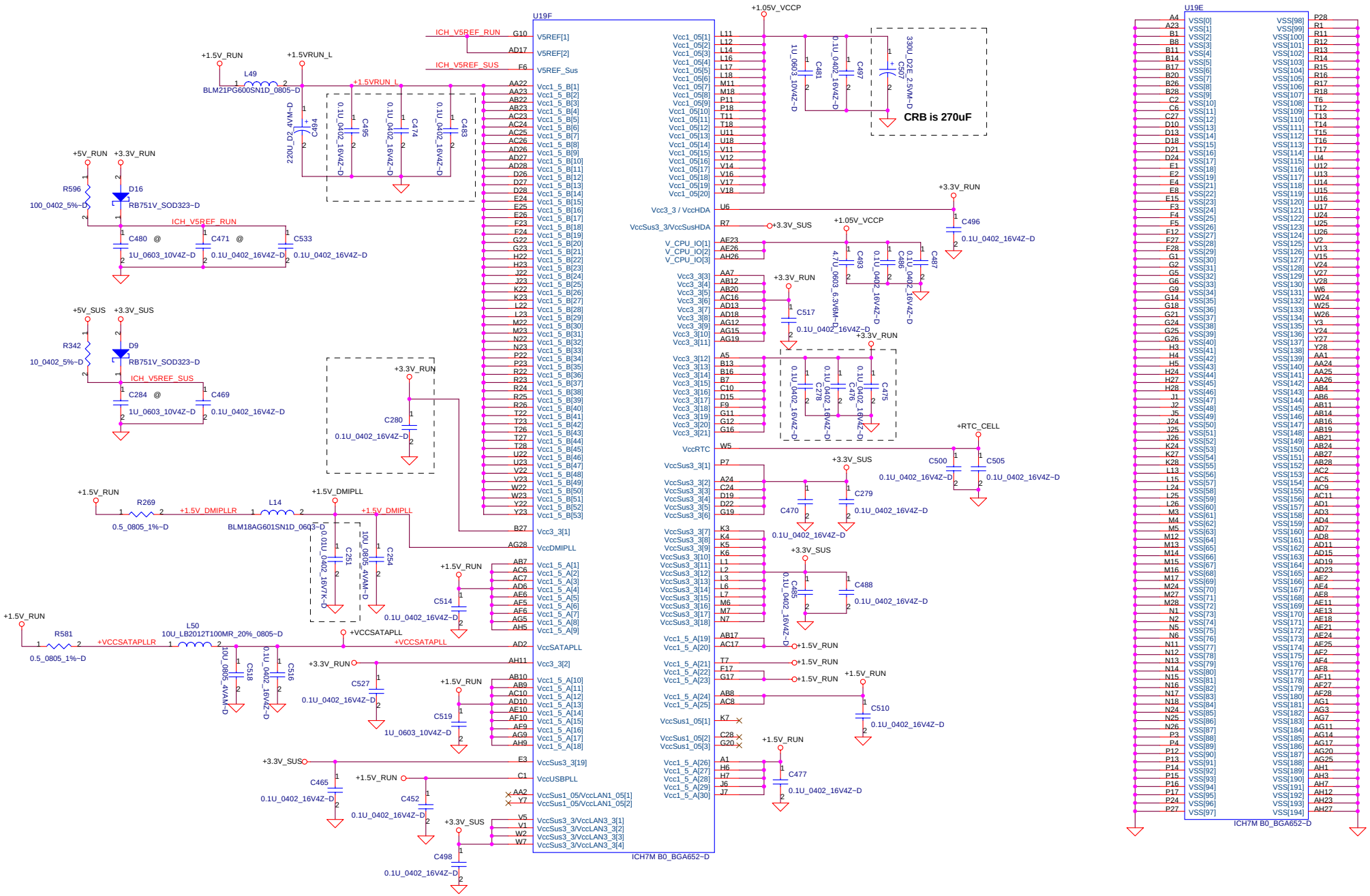

DELL CONFIDENTIAL/PROPRIETARY

PROPRIETARY NOTE: THIS SHEET OF ENGINEERING DRAWING AND SPECIFICATIONS CONTAINS CONFIDENTIAL TRADE SECRET AND OTHER PROPRIETARY INFORMATION OF DELL INC. ("DELL") THIS DOCUMENT MAY NOT BE TRANSFERRED OR COPIED WITHOUT THE EXPRESS WRITTEN AUTHORIZATION OF DELL. IN ADDITION, NEITHER THIS SHEET NOR THE INFORMATION IT CONTAINS WAY BE USED BY OR DISCLOSED TO ANY THIRD PARTY WITHOUT DELL'S EXPRESS WRITTEN CONSENT.

Compal Electronics, Inc.

Title: ICH7-M(4/4)

Size: | Document Number: LA-2881P | Rev: 2.0

Date: Tuesday, December 13, 2005 | Sheet 24 of 62

CD-ROM Connector

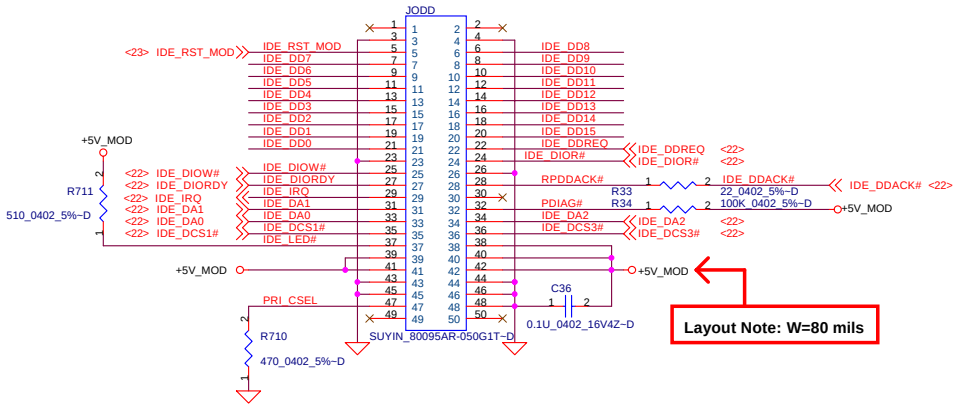

SATA Connector

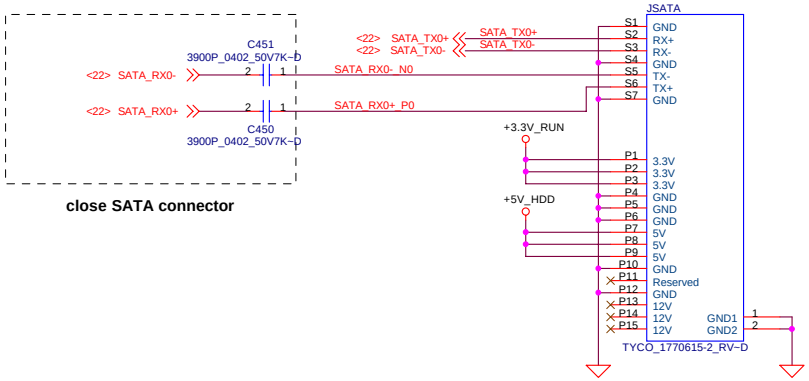

close SATA connector

Main SATA +5V Default

Layout Note: Place close to CD-ROM CONN

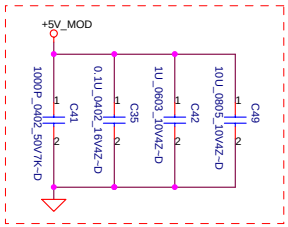

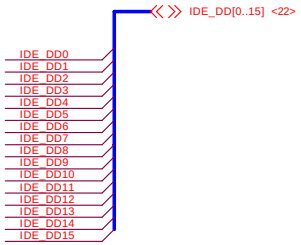

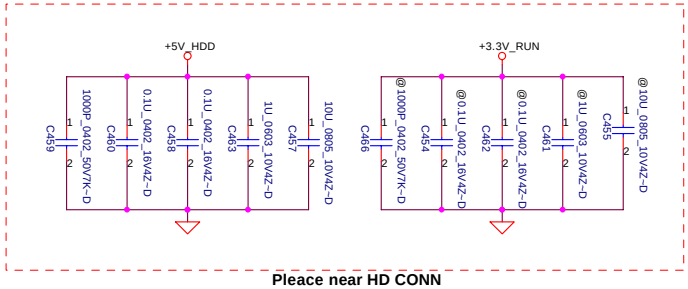

Pleace near HD CONN

+5V_MOD Source

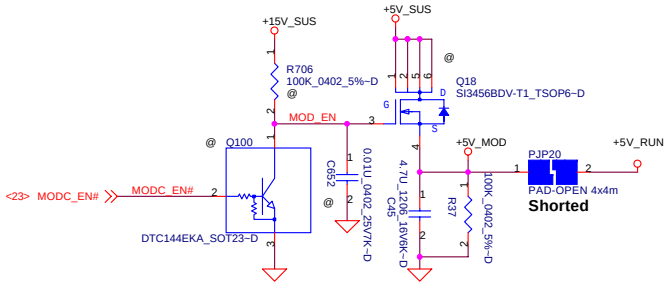

+5V_HDD Source

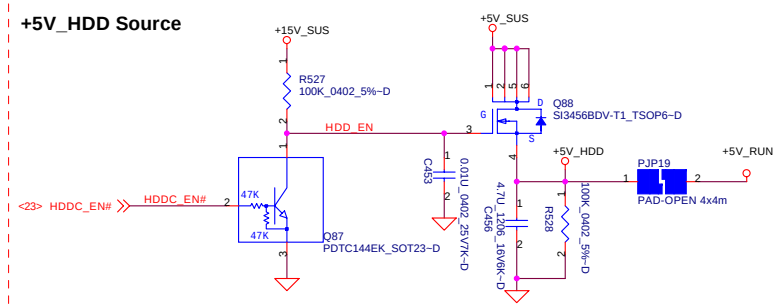

PROPRIETARY NOTE: THIS SHEET OF ENGINEERING DRAWING AND SPECIFICATIONS CONTAINS CONFIDENTIAL TRADE SECRET AND OTHER PROPRIETARY INFORMATION OF DELL INC. ("DELL") THIS DOCUMENT MAY NOT BE TRANSFERRED OR COPIED WITHOUT THE EXPRESS WRITTEN AUTHORIZATION OF DELL. IN ADDITION, NEITHER THIS SHEET NOR THE INFORMATION IT CONTAINS WAY BE USED BY OR DISCLOSED TO ANY THIRD PARTY WITHOUT DELL'S EXPRESS WRITTEN CONSENT.

DELL CONFIDENTIAL/PROPRIETARY

Compal Electronics, Inc.

Title: SATA HDD and CD-ROM CONN.

Size: | Document Number: LA-2881P | Rev: 2.0

Date: Tuesday, December 13, 2005 | Sheet 25 of 62

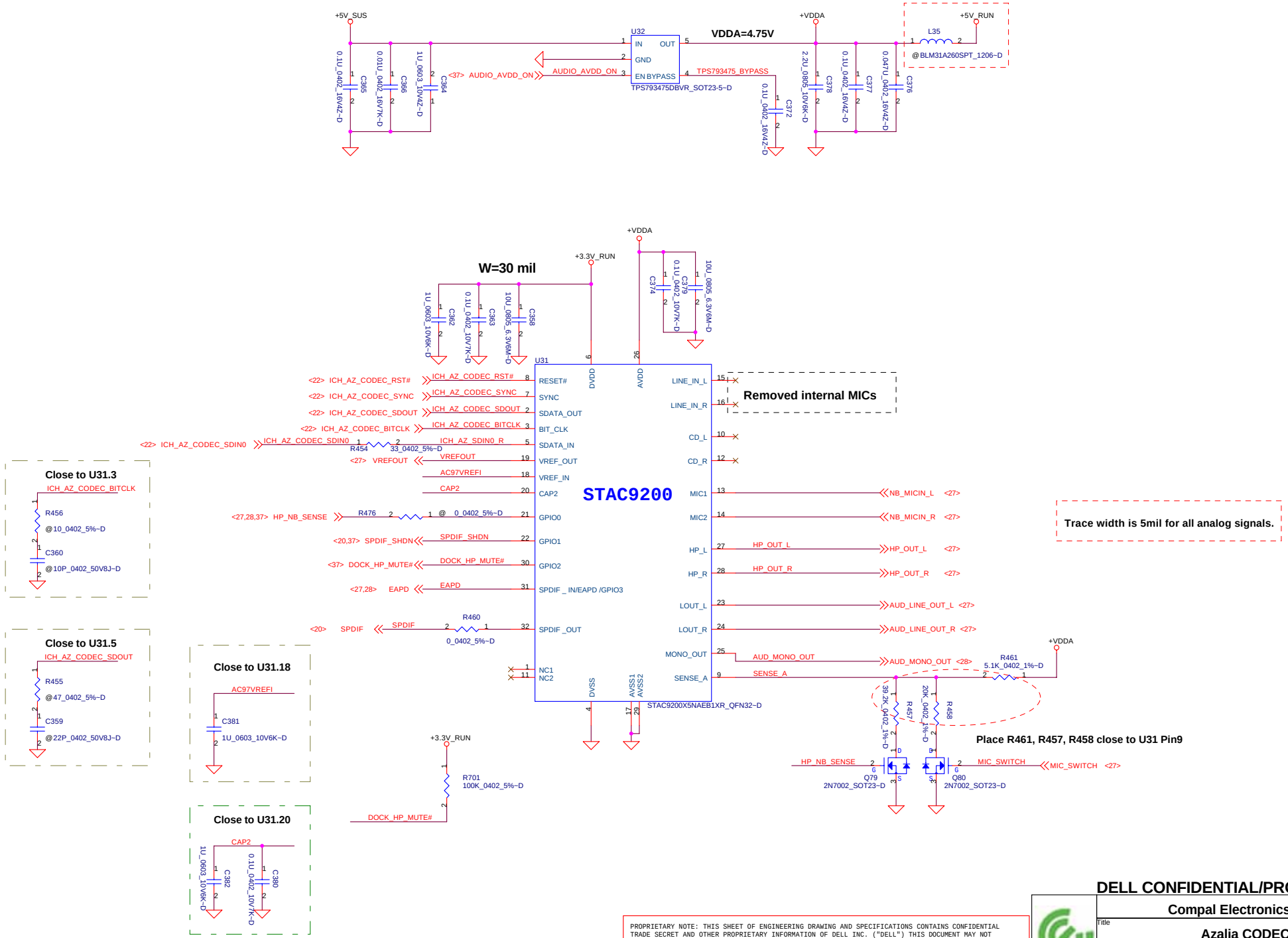

PROPRIETARY NOTE: THIS SHEET OF ENGINEERING DRAWING AND SPECIFICATIONS CONTAINS CONFIDENTIAL TRADE SECRET AND OTHER PROPRIETARY INFORMATION OF DELL INC. ("DELL") THIS DOCUMENT MAY NOT BE TRANSFERRED OR COPIED WITHOUT THE EXPRESS WRITTEN AUTHORIZATION OF DELL. IN ADDITION, NEITHER THIS SHEET NOR THE INFORMATION IT CONTAINS WAY BE USED BY OR DISCLOSED TO ANY THIRD PARTY WITHOUT DELL'S EXPRESS WRITTEN CONSENT.

DELL CONFIDENTIAL/PROPRIETARY

Compal Electronics, Inc.

Title: Azalia CODEC

Size: | Document Number: LA-2881P | Rev: 2.0

Date: Tuesday, December 13, 2005 | Sheet 26 of 62

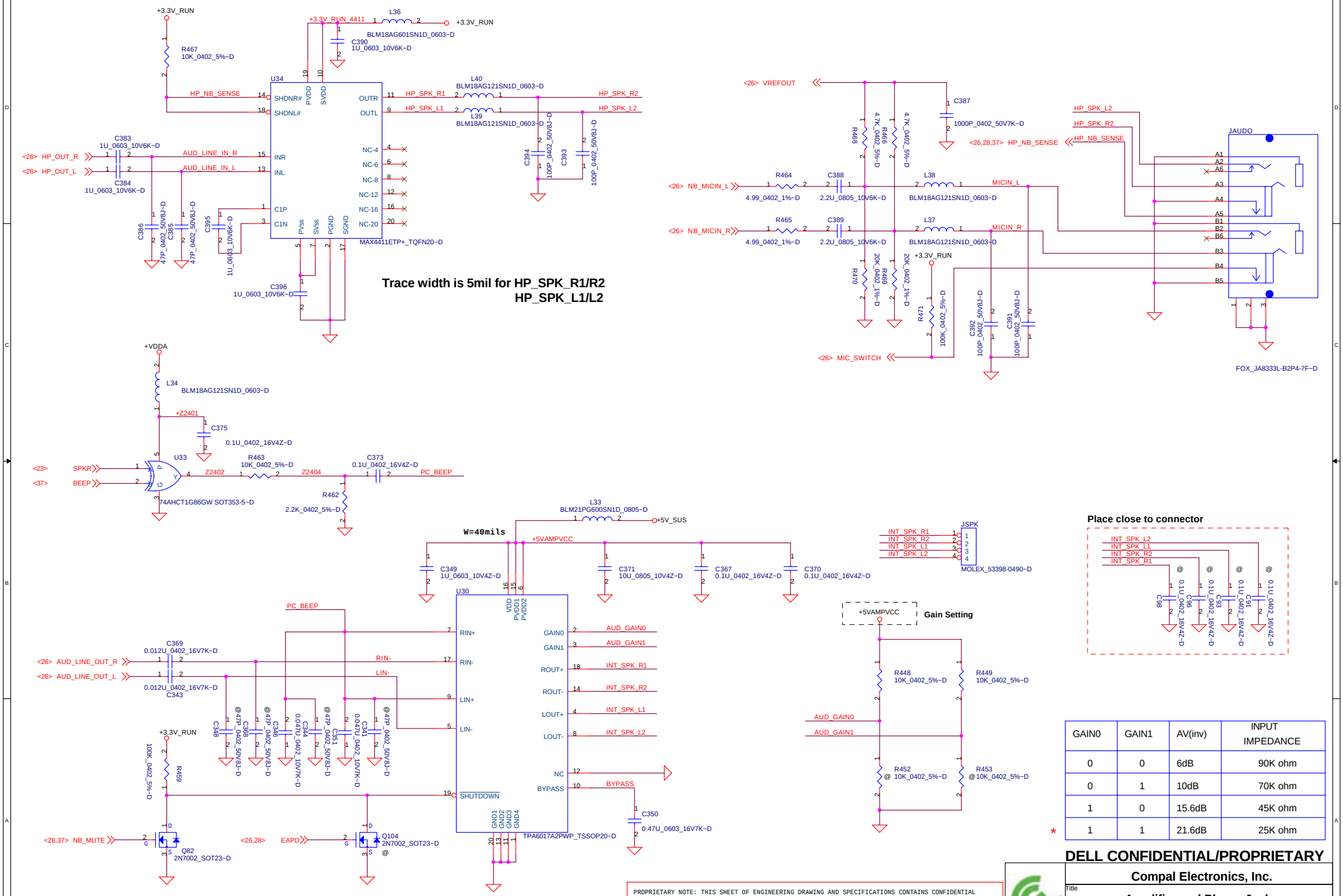

GAIN0	GAIN1	AV(inv)	INPUT IMPEDANCE
0	0	6dB	90K ohm
0	1	10dB	70K ohm
1	0	15.6dB	45K ohm
* 1	1	21.6dB	25K ohm

DELL CONFIDENTIAL/PROPRIETARY

PROPRIETARY NOTE: THIS SHEET OF ENGINEERING DRAWING AND SPECIFICATIONS CONTAINS CONFIDENTIAL TRADE SECRET AND OTHER PROPRIETARY INFORMATION OF DELL INC. ("DELL") THIS DOCUMENT MAY NOT BE TRANSFERRED OR COPIED WITHOUT THE EXPRESS WRITTEN AUTHORIZATION OF DELL. IN ADDITION, NEITHER THIS SHEET NOR THE INFORMATION IT CONTAINS WAY BE USED BY OR DISCLOSED TO ANY THIRD PARTY WITHOUT DELL'S EXPRESS WRITTEN CONSENT.

Compal Electronics, Inc.

Title: Amplifier and Phone Jack

Size: | Document Number: LA-2881P | Rev: 2.0

Date: Tuesday, December 13, 2005 | Sheet 27 of 62

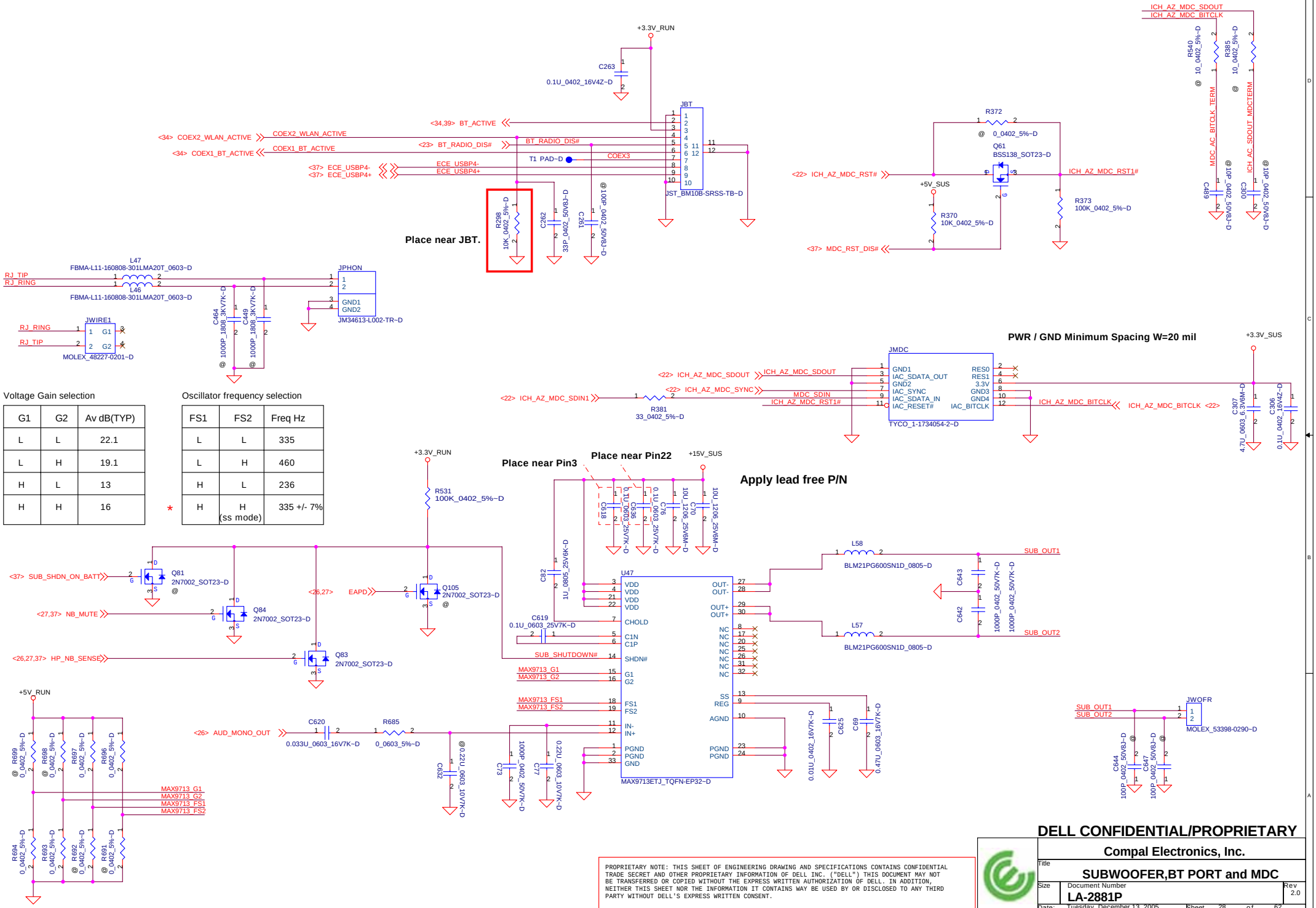

G1	G2	Av dB(TYP)
L	L	22.1
L	H	19.1
H	L	13
H	H	16

FS1	FS2	Freq Hz
L	L	335
L	H	460
H	L	236
H	H (ss mode)	335 +/- 7%

Ext Back Right USB Port

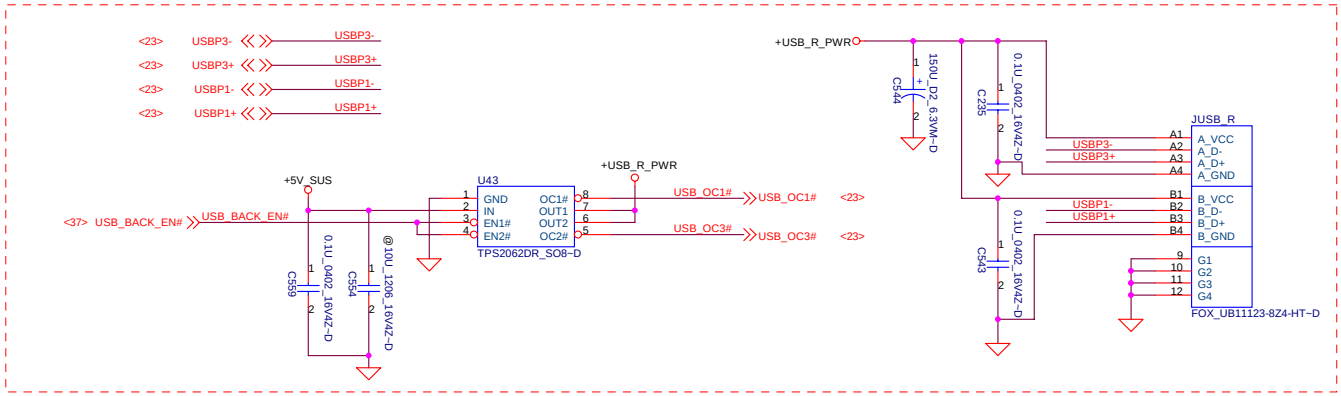

USB IO PORT#	DESTINATION
1	JUSB_R (Ext Back Right Bottom)
2	JUSB_S (Ext Side Bottom)
3	JUSB_R (Ext Back Right Top)
4	JUSB_L (Ext Back Left Top)
5	JUSB_S (Ext Side Top)
6	JUSB_L (Ext Back Left Bottom)

Ext Back Left USB Port

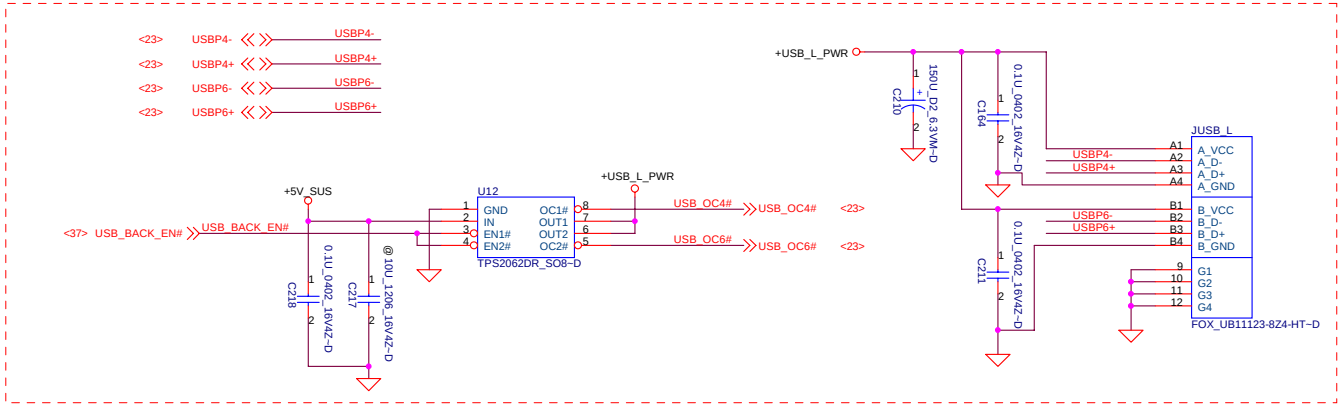

Place U189, U190, U191 as close as USB connector.

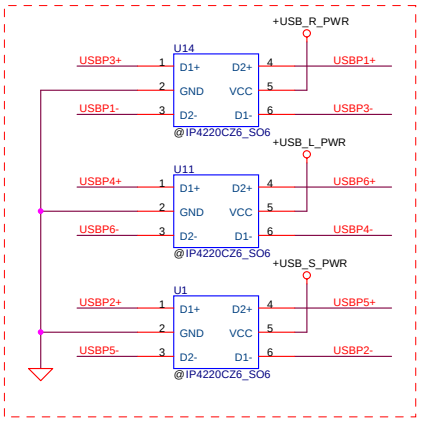

Ext Side USB Port

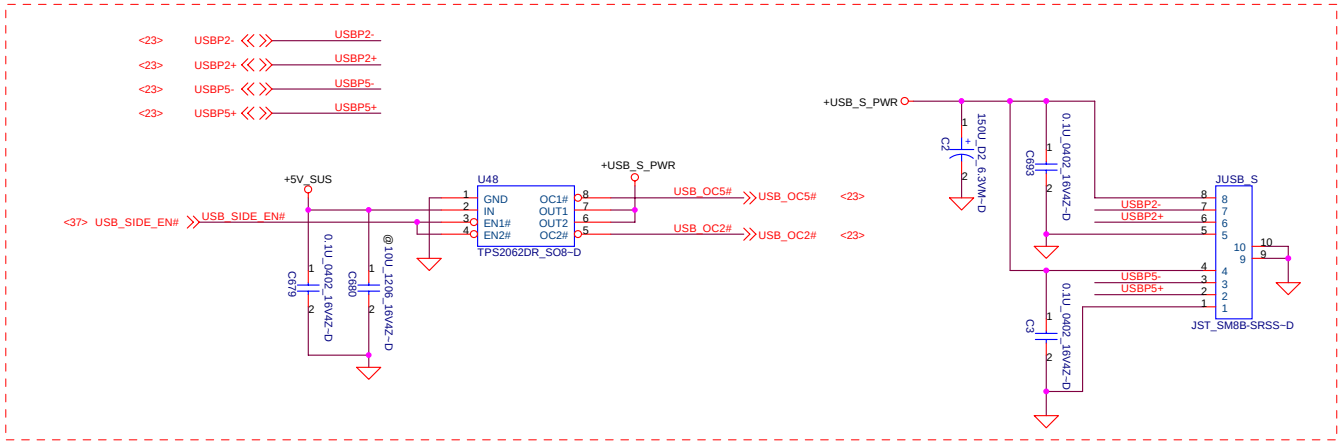

PROPRIETARY NOTE: THIS SHEET OF ENGINEERING DRAWING AND SPECIFICATIONS CONTAINS CONFIDENTIAL TRADE SECRET AND OTHER PROPRIETARY INFORMATION OF DELL INC. ("DELL") THIS DOCUMENT MAY NOT BE TRANSFERRED OR COPIED WITHOUT THE EXPRESS WRITTEN AUTHORIZATION OF DELL. IN ADDITION, NEITHER THIS SHEET NOR THE INFORMATION IT CONTAINS WAY BE USED BY OR DISCLOSED TO ANY THIRD PARTY WITHOUT DELL'S EXPRESS WRITTEN CONSENT.

DELL CONFIDENTIAL/PROPRIETARY

Compal Electronics, Inc.

Title: USB 2.0 PORT

Size | Document Number: LA-2881P | Rev 2.0

Date: Tuesday, December 13, 2005 | Sheet 29 of 62

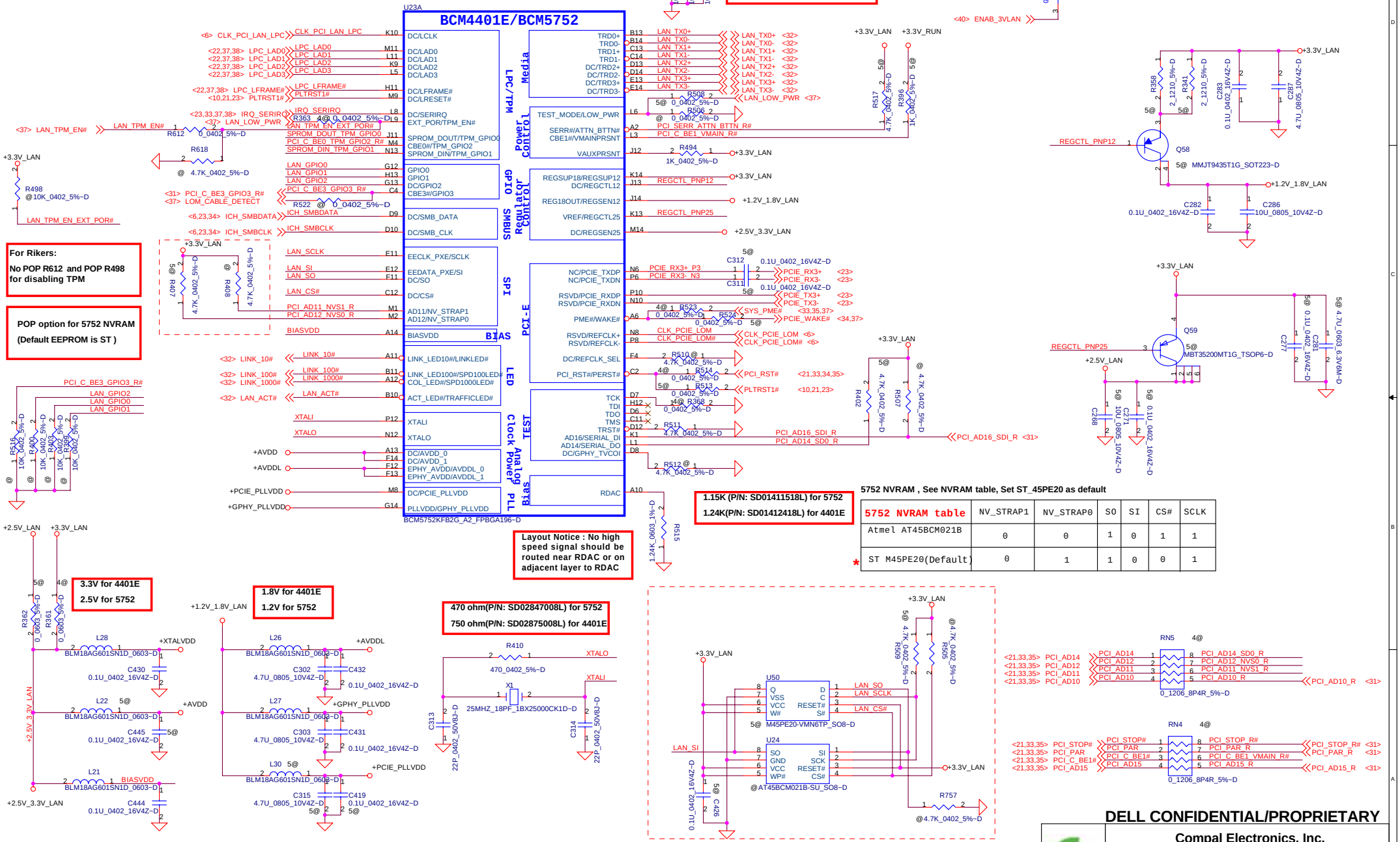

5752 NVRAM table	NV_STRAP1	NV_STRAP0	SO	SI	CS#	SCLK
Atmel AT45BCM021B	0	0	1	0	1	1
* ST M45PE20(Default)	0	1	1	0	0	1

PROPRIETARY NOTE: THIS SHEET OF ENGINEERING DRAWING AND SPECIFICATIONS CONTAINS CONFIDENTIAL TRADE SECRET AND OTHER PROPRIETARY INFORMATION OF DELL INC. ("DELL") THIS DOCUMENT MAY NOT BE TRANSFERRED OR COPIED WITHOUT THE EXPRESS WRITTEN AUTHORIZATION OF DELL. IN ADDITION, NEITHER THIS SHEET NOR THE INFORMATION IT CONTAINS WAY BE USED BY OR DISCLOSED TO ANY THIRD PARTY WITHOUT DELL'S EXPRESS WRITTEN CONSENT.

P/N: SA00000o70L (5752KFB2), 5@
SA00000oD0L (4401E), 4@

1.8V for 4401E
1.2V for 5752

U23B
BCM4401E/BCM5752
BCM5752KFB2G_A2_FPBGA196-D

Digital power
GND
Don't Care connections
Disconnected

Place as close as to U22B, Pin A1 , A7 , B3 , C5 , E1 , E4 , G1, G2, K3, L4, P1, P2

For 4401E

U25 AT93C46-10SU-2.7_SO8-D

Layout Notice : Place Caps as close as to chip

No POP R868
(When CLKRUN# is support in system)

Place as close as to chip
U22,Pin A8,D5,P13

Reserve R894,R891,R895,R893,R892,R890,R887,R888,R889 as NO POP .
Isolate the PCIE signals from others when 5752 is populated.
See 5752 Pinout Diagram.

RN11 4@ 0_1206_8P4R_5%-D
RN10 4@ 0_1206_8P4R_5%-D
RN6 4@ 0_1206_8P4R_5%-D
RN1 4@ 0_1206_8P4R_5%-D
RN9 4@ 0_1206_8P4R_5%-D
RN7 4@ 0_1206_8P4R_5%-D
RN2 4@ 0_1206_8P4R_5%-D
RN12 4@ 0_1206_8P4R_5%-D
RN3 4@ 0_1206_8P4R_5%-D
RN8 4@ 0_1206_8P4R_5%-D

PROPRIETARY NOTE: THIS SHEET OF ENGINEERING DRAWING AND SPECIFICATIONS CONTAINS CONFIDENTIAL TRADE SECRET AND OTHER PROPRIETARY INFORMATION OF DELL INC. ("DELL") THIS DOCUMENT MAY NOT BE TRANSFERRED OR COPIED WITHOUT THE EXPRESS WRITTEN AUTHORIZATION OF DELL. IN ADDITION, NEITHER THIS SHEET NOR THE INFORMATION IT CONTAINS WAY BE USED BY OR DISCLOSED TO ANY THIRD PARTY WITHOUT DELL'S EXPRESS WRITTEN CONSENT.

DELL CONFIDENTIAL/PROPRIETARY

Compal Electronics, Inc.

Title	BCM5752/4401E
Size	Document Number LA-2881P
Rev	2.0
Date:	Tuesday, December 13, 2005
Sheet	31 of 62

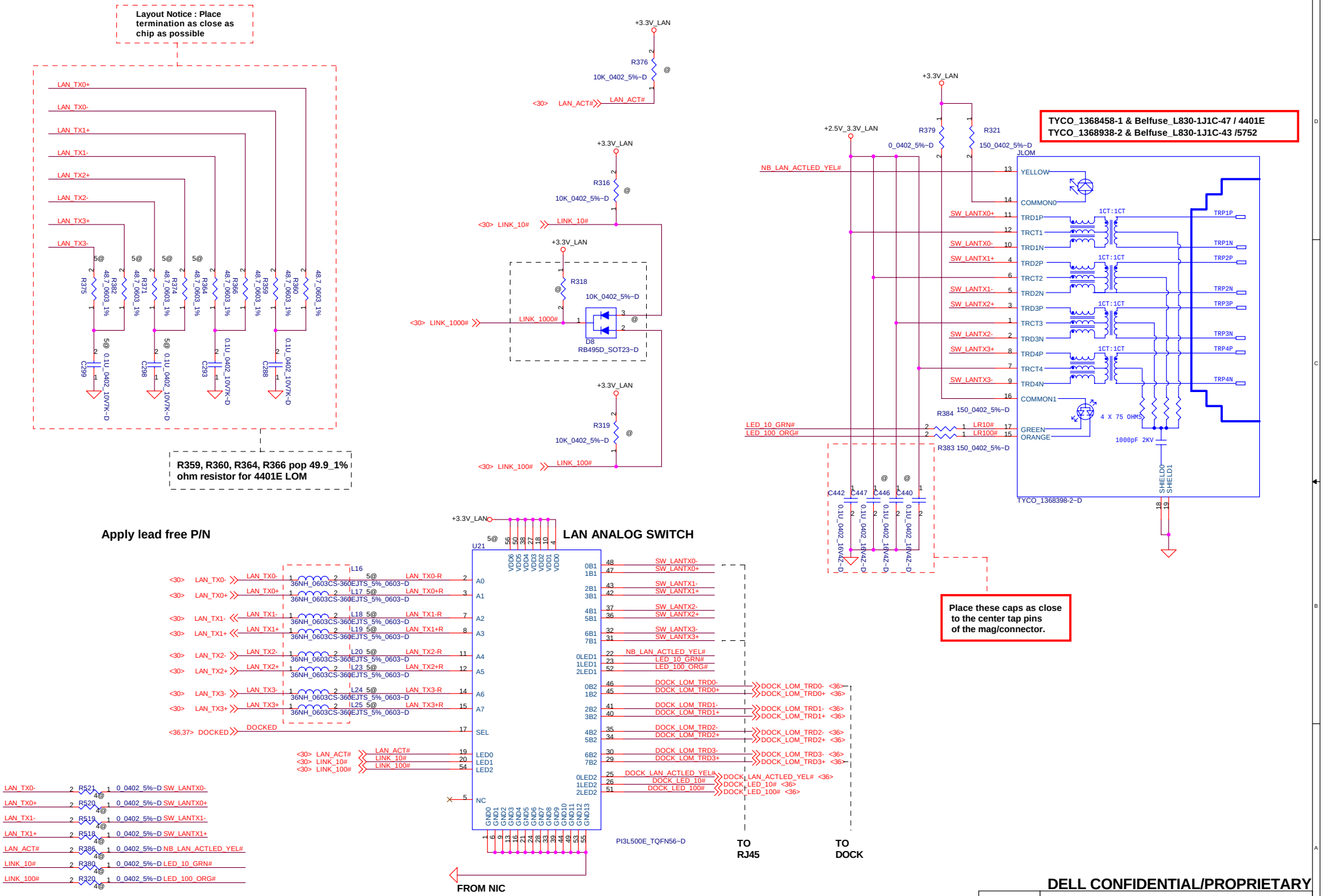

PROPRIETARY NOTE: THIS SHEET OF ENGINEERING DRAWING AND SPECIFICATIONS CONTAINS CONFIDENTIAL TRADE SECRET AND OTHER PROPRIETARY INFORMATION OF DELL INC. ("DELL") THIS DOCUMENT MAY NOT BE TRANSFERRED OR COPIED WITHOUT THE EXPRESS WRITTEN AUTHORIZATION OF DELL. IN ADDITION, NEITHER THIS SHEET NOR THE INFORMATION IT CONTAINS WAY BE USED BY OR DISCLOSED TO ANY THIRD PARTY WITHOUT DELL'S EXPRESS WRITTEN CONSENT.

DELL CONFIDENTIAL/PROPRIETARY

Compal Electronics, Inc.

Title: LAN Transfomer and RJ45

Size: | Document Number: LA-2881P | Rev: 2.0

Date: Tuesday, December 13, 2005 | Sheet 32 of 62

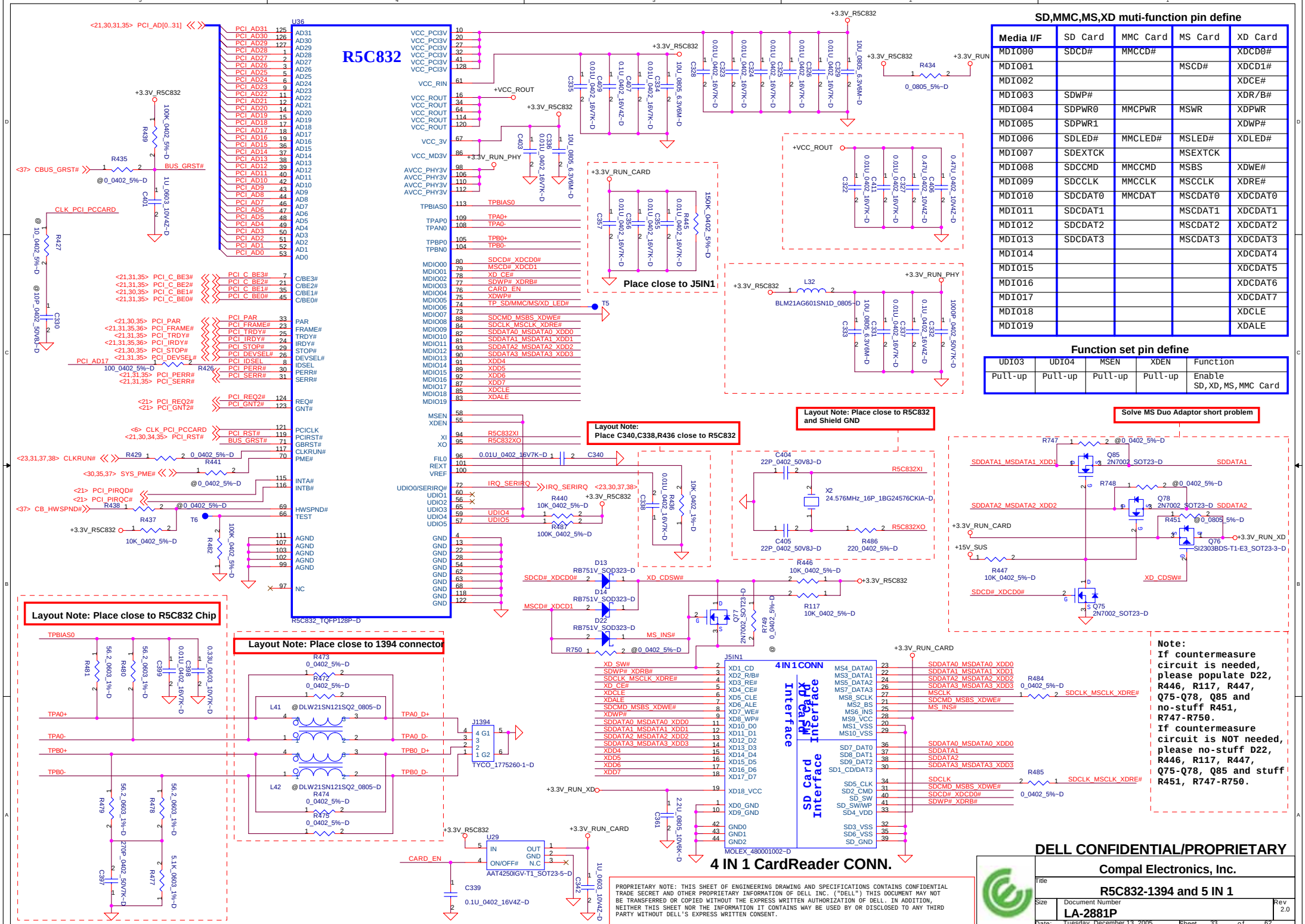

SD,MMC,MS,XD muti-function pin define

Media I/F	SD Card	MMC Card	MS Card	XD Card
MDIO00	SDCD#	MMCCD#		XDCD0#
MDIO01			MSCD#	XDCD1#
MDIO02				XDCE#
MDIO03	SDWP#			XDR/B#
MDIO04	SDPWR0	MMCPWR	MSWR	XDPWR
MDIO05	SDPWR1			XDWP#
MDIO06	SDLED#	MMCLED#	MSLED#	XDLED#
MDIO07	SDEXTCK		MSEXTCK	
MDIO08	SDCCMD	MMCCMD	MSBS	XDWE#
MDIO09	SDCCLK	MMCCLK	MSCCLK	XDRE#
MDIO10	SDCDAT0	MMCDAT	MSCDAT0	XDCDAT0
MDIO11	SDCDAT1		MSCDAT1	XDCDAT1
MDIO12	SDCDAT2		MSCDAT2	XDCDAT2
MDIO13	SDCDAT3		MSCDAT3	XDCDAT3
MDIO14				XDCDAT4
MDIO15				XDCDAT5
MDIO16				XDCDAT6
MDIO17				XDCDAT7
MDIO18				XDCLE
MDIO19				XDALE

Function set pin define

UDIO3	UDIO4	MSEN	XDEN	Function
Pull-up	Pull-up	Pull-up	Pull-up	Enable SD,XD,MS,MMC Card

PROPRIETARY NOTE: THIS SHEET OF ENGINEERING DRAWING AND SPECIFICATIONS CONTAINS CONFIDENTIAL TRADE SECRET AND OTHER PROPRIETARY INFORMATION OF DELL INC. ("DELL") THIS DOCUMENT MAY NOT BE TRANSFERRED OR COPIED WITHOUT THE EXPRESS WRITTEN AUTHORIZATION OF DELL. IN ADDITION, NEITHER THIS SHEET NOR THE INFORMATION IT CONTAINS WAY BE USED BY OR DISCLOSED TO ANY THIRD PARTY WITHOUT DELL'S EXPRESS WRITTEN CONSENT.

DELL CONFIDENTIAL/PROPRIETARY

Compal Electronics, Inc.

Title: R5C832-1394 and 5 IN 1

Size: | Document Number: LA-2881P | Rev: 2.0

Date: Tuesday, December 13, 2005 | Sheet 33 of 62

MINI Wireless LAN Card

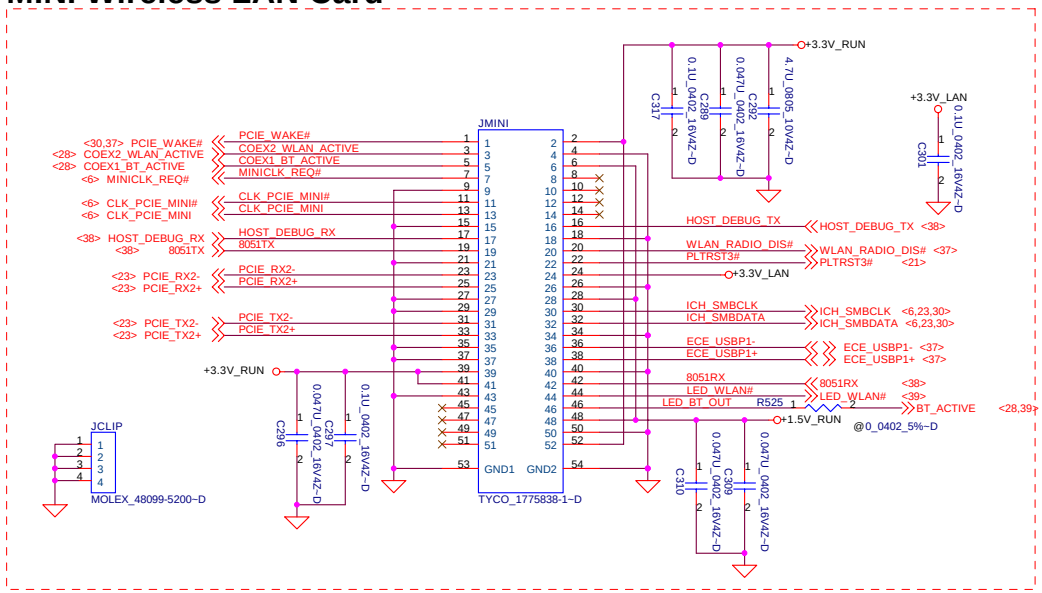

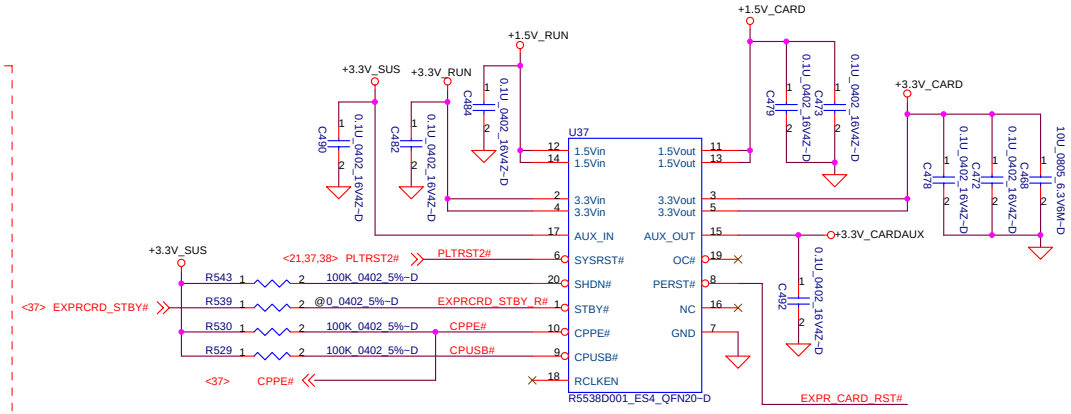

+1.5V_CARD: Max. 650mA, Average 500mA
+3.3V_CARD: Max. 1300mA, Average 1000mA

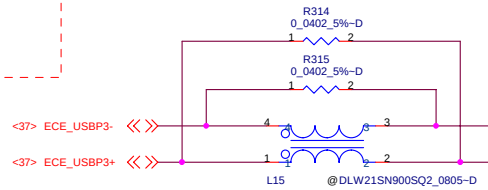

SMART CARD

MODE1	CLOCK INPUT
LOW	48MHz
HIGH	6MHz Crystal

USB SMARTCARD READER.
TYPE A (5V), B (3V), AB (5V/3V)
& USB SMARTCARDS ARE SUPPORTED.

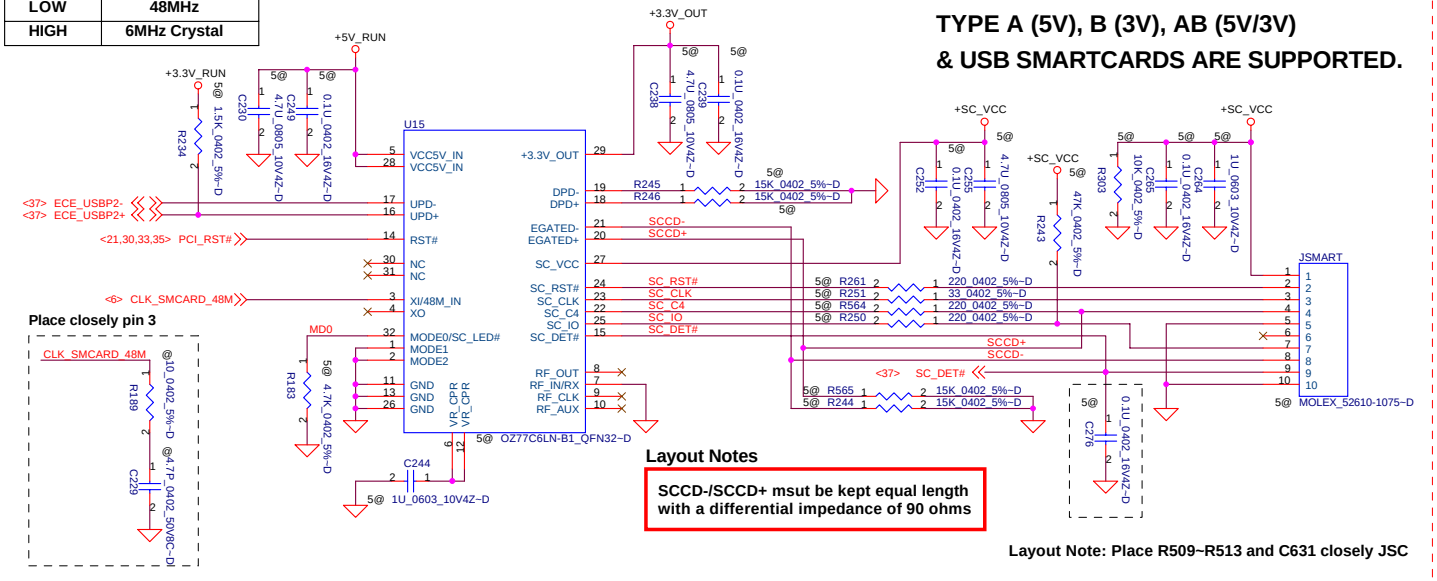

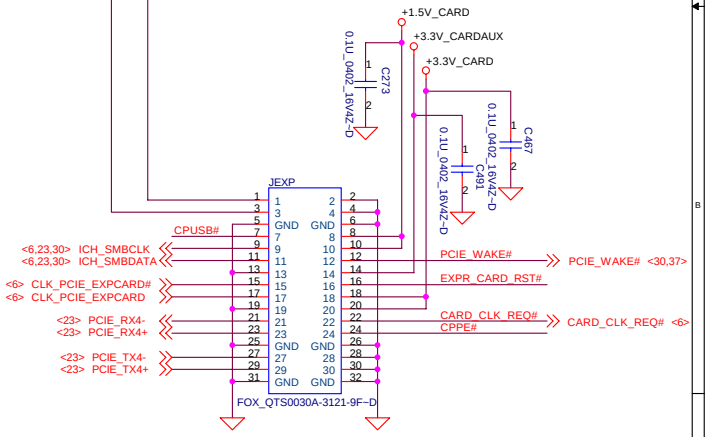

Layout Notes

SCCD-/SCCD+ msut be kept equal length with a differential impedance of 90 ohms

Layout Note: Place R509~R513 and C631 closely JSC

DELL CONFIDENTIAL/PROPRIETARY

PROPRIETARY NOTE: THIS SHEET OF ENGINEERING DRAWING AND SPECIFICATIONS CONTAINS CONFIDENTIAL TRADE SECRET AND OTHER PROPRIETARY INFORMATION OF DELL INC. ("DELL") THIS DOCUMENT MAY NOT BE TRANSFERRED OR COPIED WITHOUT THE EXPRESS WRITTEN AUTHORIZATION OF DELL. IN ADDITION, NEITHER THIS SHEET NOR THE INFORMATION IT CONTAINS WAY BE USED BY OR DISCLOSED TO ANY THIRD PARTY WITHOUT DELL'S EXPRESS WRITTEN CONSENT.

Compal Electronics, Inc.

Title: SMART/EXPRESS/MINI CARD

Size: | Document Number: LA-2881P | Rev: 2.0

Date: Tuesday, December 13, 2005 | Sheet 34 of 62

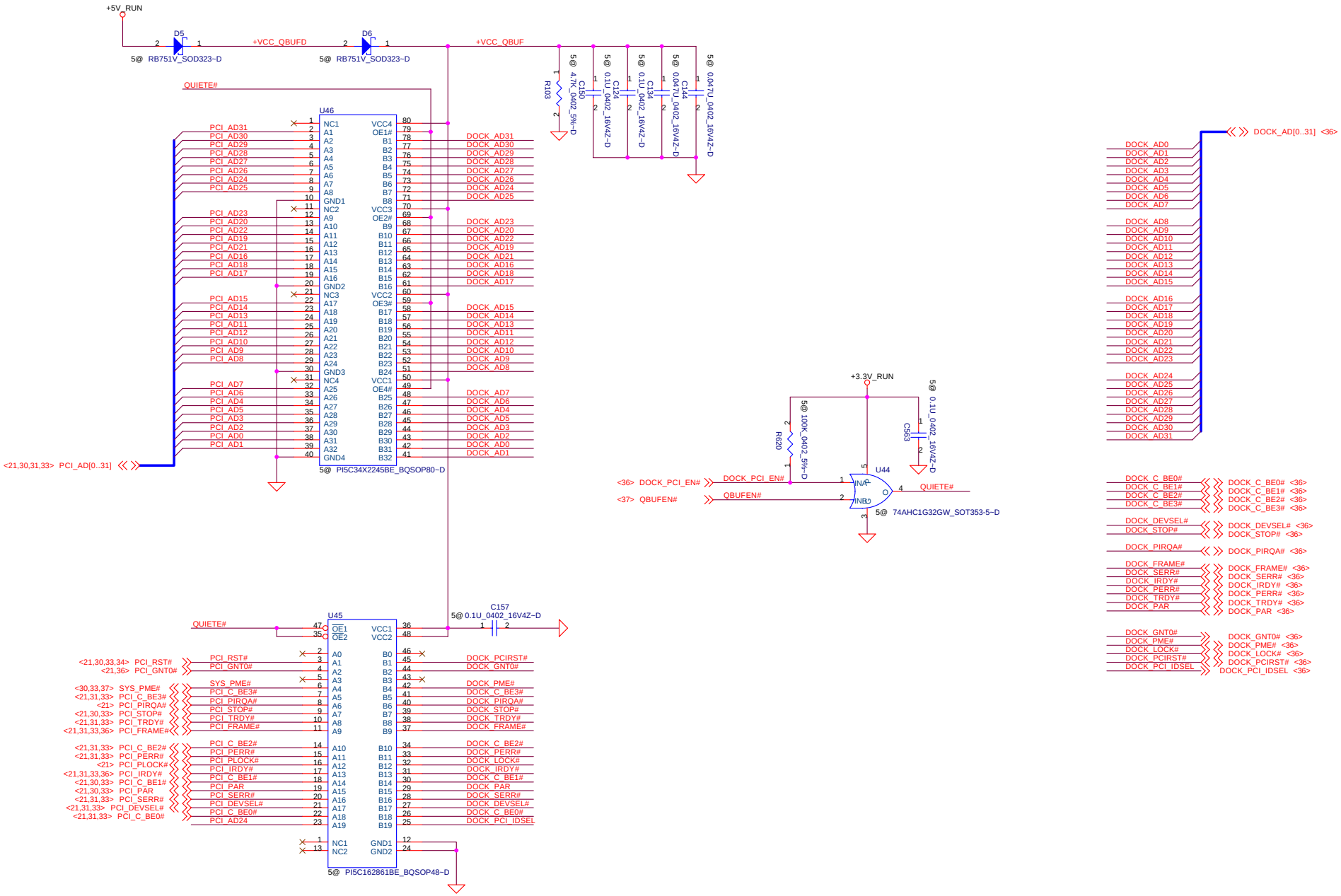

DELL CONFIDENTIAL/PROPRIETARY

PROPRIETARY NOTE: THIS SHEET OF ENGINEERING DRAWING AND SPECIFICATIONS CONTAINS CONFIDENTIAL TRADE SECRET AND OTHER PROPRIETARY INFORMATION OF DELL INC. ("DELL") THIS DOCUMENT MAY NOT BE TRANSFERRED OR COPIED WITHOUT THE EXPRESS WRITTEN AUTHORIZATION OF DELL. IN ADDITION, NEITHER THIS SHEET NOR THE INFORMATION IT CONTAINS WAY BE USED BY OR DISCLOSED TO ANY THIRD PARTY WITHOUT DELL'S EXPRESS WRITTEN CONSENT.

Compal Electronics, Inc.

Title: DOCKING BUFFER

Size: | Document Number: LA-2881P | Rev: 2.0

Date: Tuesday, December 13, 2005 | Sheet 35 of 62

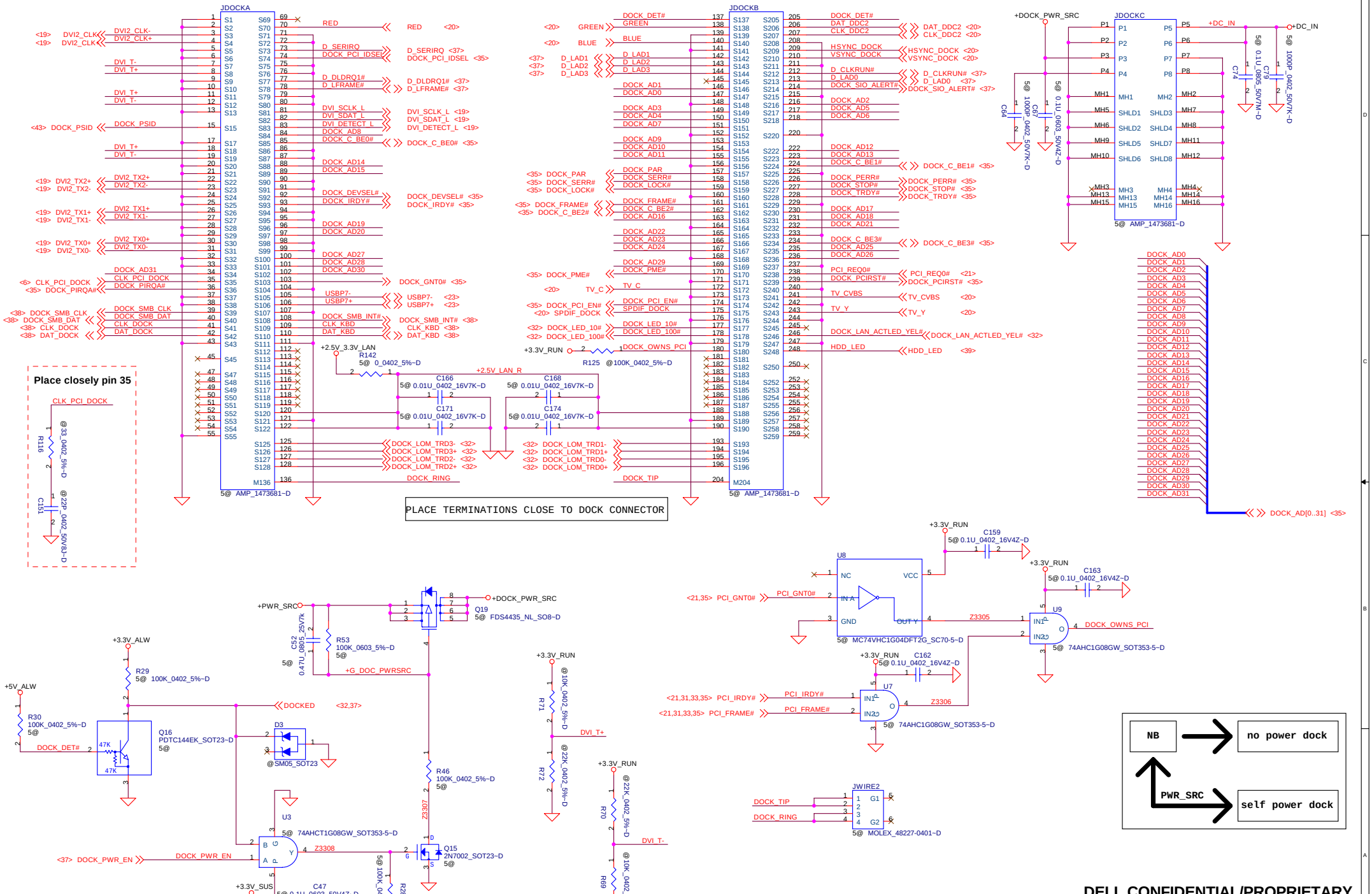

PROPRIETARY NOTE: THIS SHEET OF ENGINEERING DRAWING AND SPECIFICATIONS CONTAINS CONFIDENTIAL TRADE SECRET AND OTHER PROPRIETARY INFORMATION OF DELL INC. ("DELL") THIS DOCUMENT MAY NOT BE TRANSFERRED OR COPIED WITHOUT THE EXPRESS WRITTEN AUTHORIZATION OF DELL. IN ADDITION, NEITHER THIS SHEET NOR THE INFORMATION IT CONTAINS WAY BE USED BY OR DISCLOSED TO ANY THIRD PARTY WITHOUT DELL'S EXPRESS WRITTEN CONSENT.

DELL CONFIDENTIAL/PROPRIETARY

Compal Electronics, Inc.

Title: DOCKING CONNECTOR

Size: | Document Number: LA-2881P | Rev: 2.0

Date: Tuesday, December 13, 2005 | Sheet 36 of 62

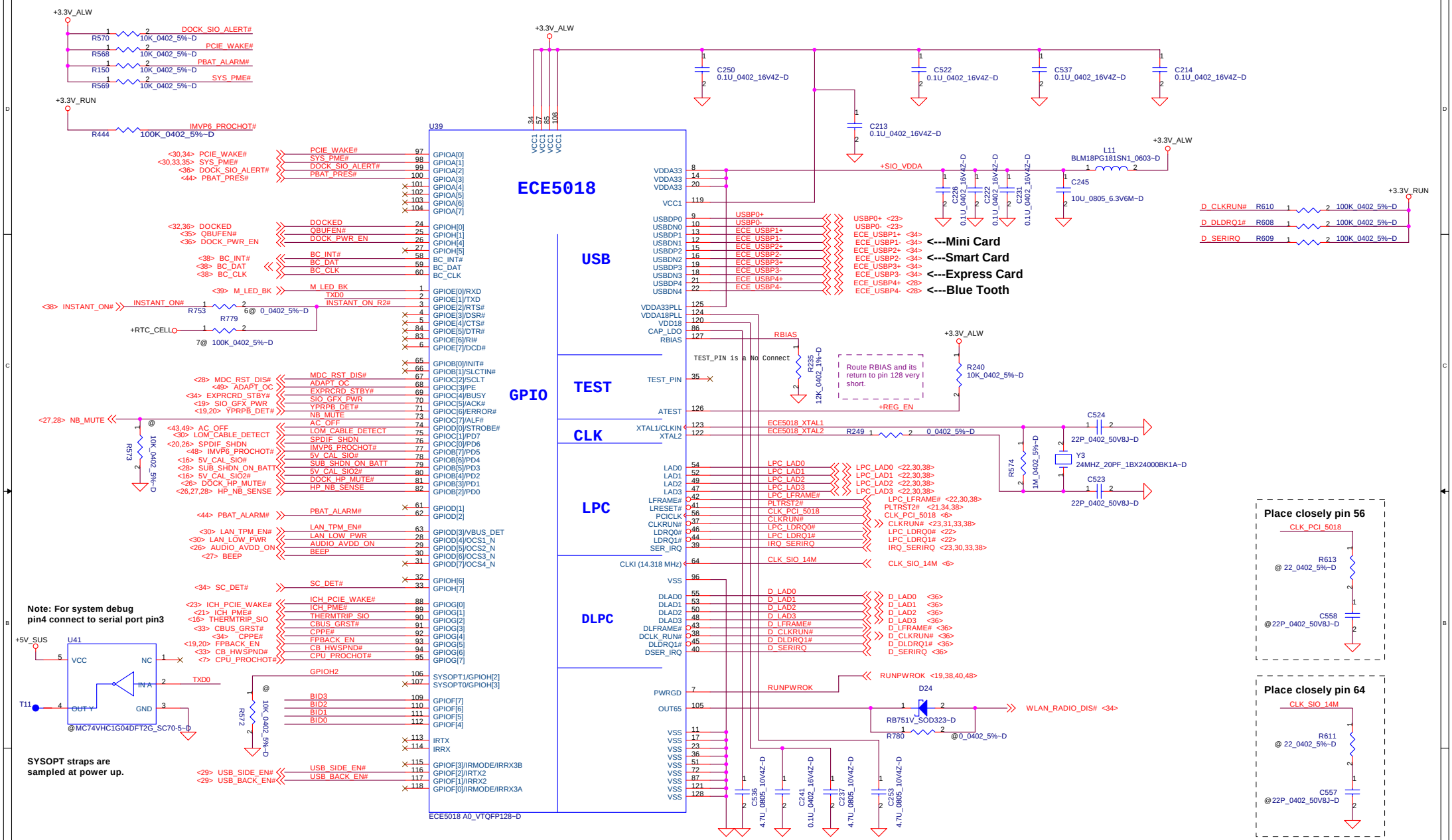

BID3	BID2	BID1	BID0	REV
0	0	0	0	M00
0	0	0	1	X00
0	0	1	0	X01
0	0	1	1	X02
0	1	0	0	A00
0	1	0	1	A01

PROPRIETARY NOTE: THIS SHEET OF ENGINEERING DRAWING AND SPECIFICATIONS CONTAINS CONFIDENTIAL TRADE SECRET AND OTHER PROPRIETARY INFORMATION OF DELL INC. ("DELL") THIS DOCUMENT MAY NOT BE TRANSFERRED OR COPIED WITHOUT THE EXPRESS WRITTEN AUTHORIZATION OF DELL. IN ADDITION, NEITHER THIS SHEET NOR THE INFORMATION IT CONTAINS WAY BE USED BY OR DISCLOSED TO ANY THIRD PARTY WITHOUT DELL'S EXPRESS WRITTEN CONSENT.

DELL CONFIDENTIAL/PROPRIETARY

Compal Electronics, Inc.

Title: SUPPER IO ECE5018

Size: | Document Number: LA-2881P | Rev: 2.0

Date: Tuesday, December 13, 2005 | Sheet 37 of 62

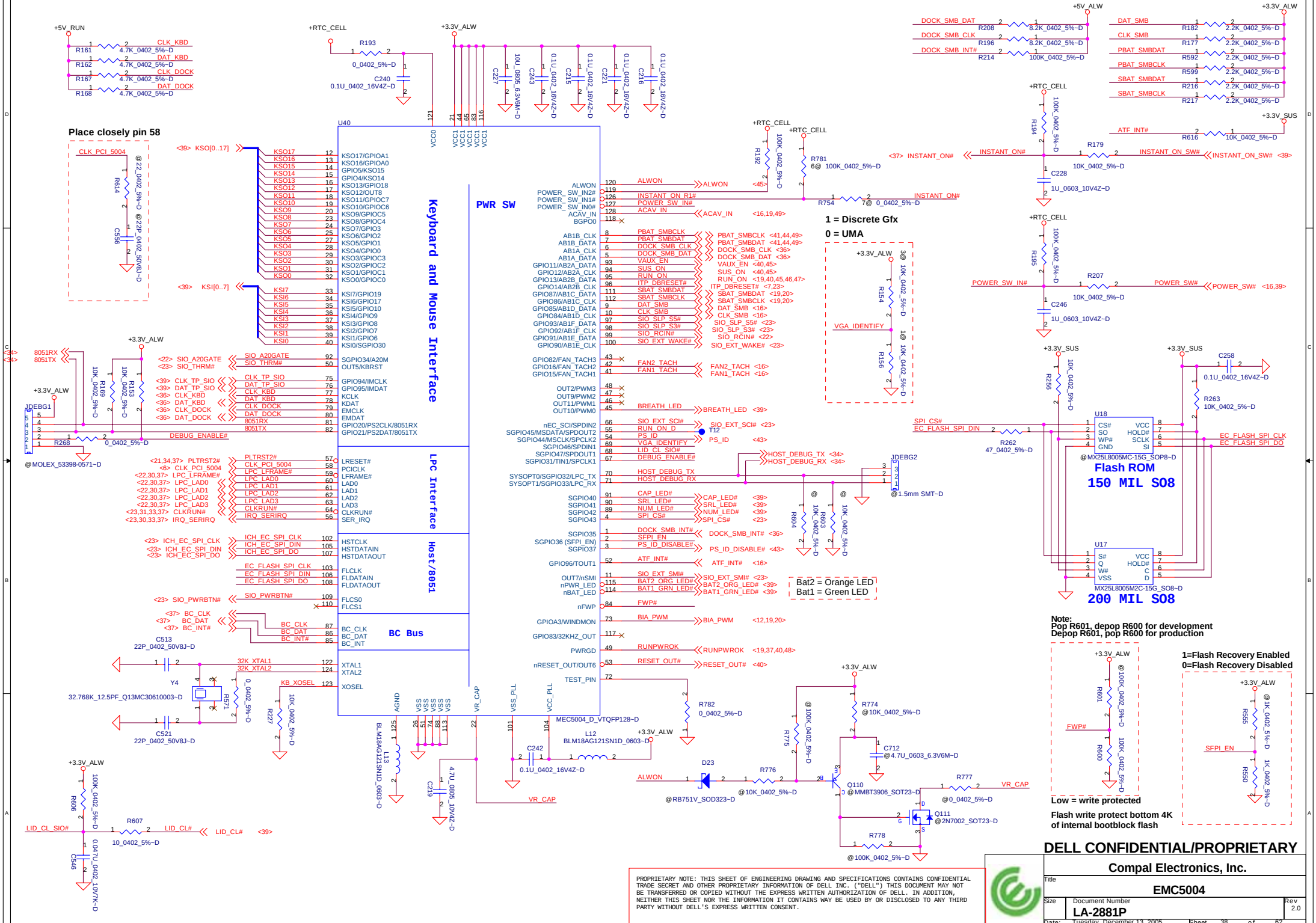

PROPRIETARY NOTE: THIS SHEET OF ENGINEERING DRAWING AND SPECIFICATIONS CONTAINS CONFIDENTIAL TRADE SECRET AND OTHER PROPRIETARY INFORMATION OF DELL INC. ("DELL") THIS DOCUMENT MAY NOT BE TRANSFERRED OR COPIED WITHOUT THE EXPRESS WRITTEN AUTHORIZATION OF DELL. IN ADDITION, NEITHER THIS SHEET NOR THE INFORMATION IT CONTAINS WAY BE USED BY OR DISCLOSED TO ANY THIRD PARTY WITHOUT DELL'S EXPRESS WRITTEN CONSENT.

Touch PAD and Multi Media

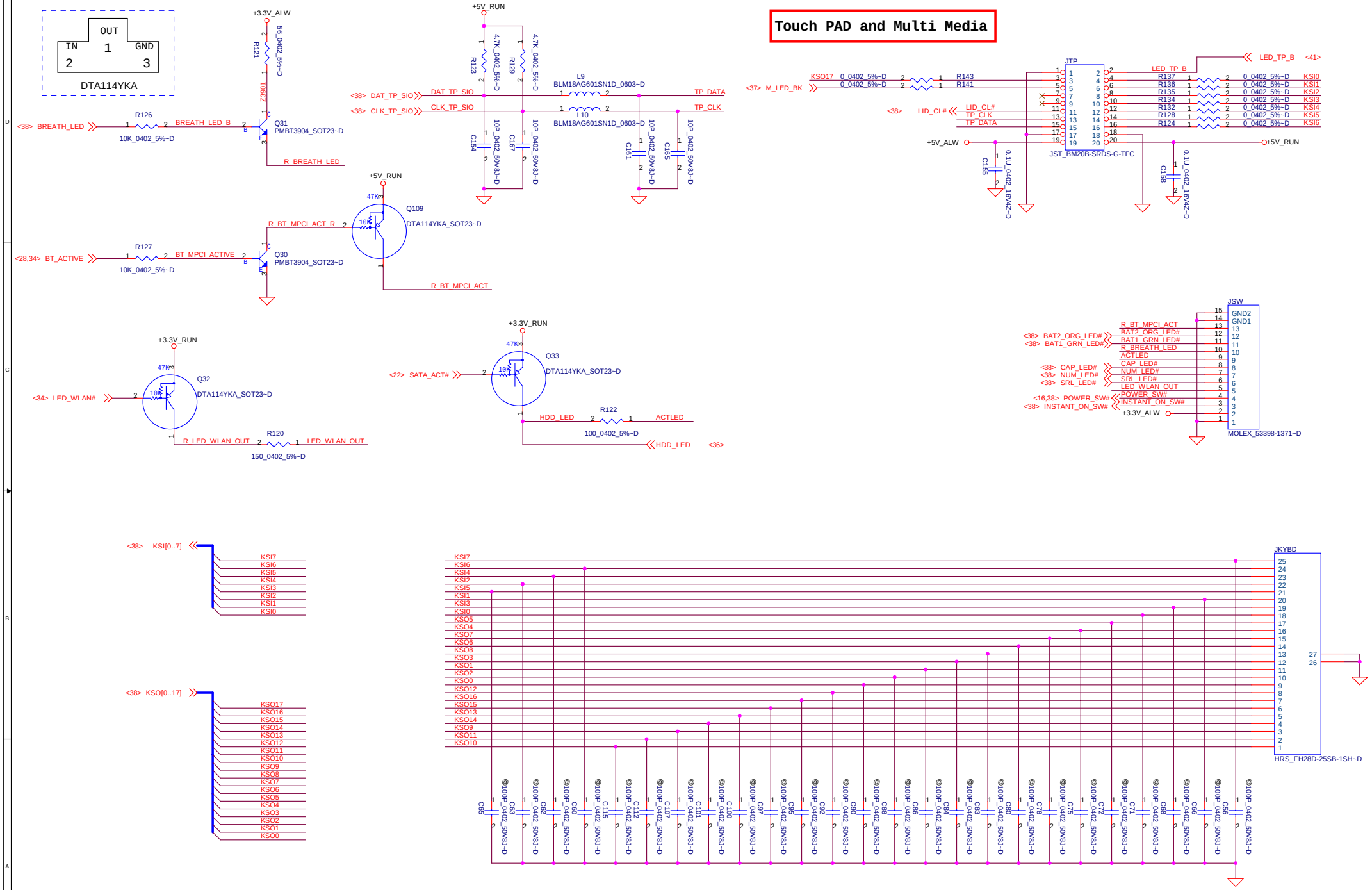

DELL CONFIDENTIAL/PROPRIETARY

PROPRIETARY NOTE: THIS SHEET OF ENGINEERING DRAWING AND SPECIFICATIONS CONTAINS CONFIDENTIAL TRADE SECRET AND OTHER PROPRIETARY INFORMATION OF DELL INC. ("DELL") THIS DOCUMENT MAY NOT BE TRANSFERRED OR COPIED WITHOUT THE EXPRESS WRITTEN AUTHORIZATION OF DELL. IN ADDITION, NEITHER THIS SHEET NOR THE INFORMATION IT CONTAINS WAY BE USED BY OR DISCLOSED TO ANY THIRD PARTY WITHOUT DELL'S EXPRESS WRITTEN CONSENT.

Compal Electronics, Inc.

Title: LED/INT KB/Touch Pad and Swithch CONN.

Size: | Document Number: LA-2881P | Rev: 2.0

Date: Tuesday, December 13, 2005 | Sheet 39 of 62

Run Planes Enable

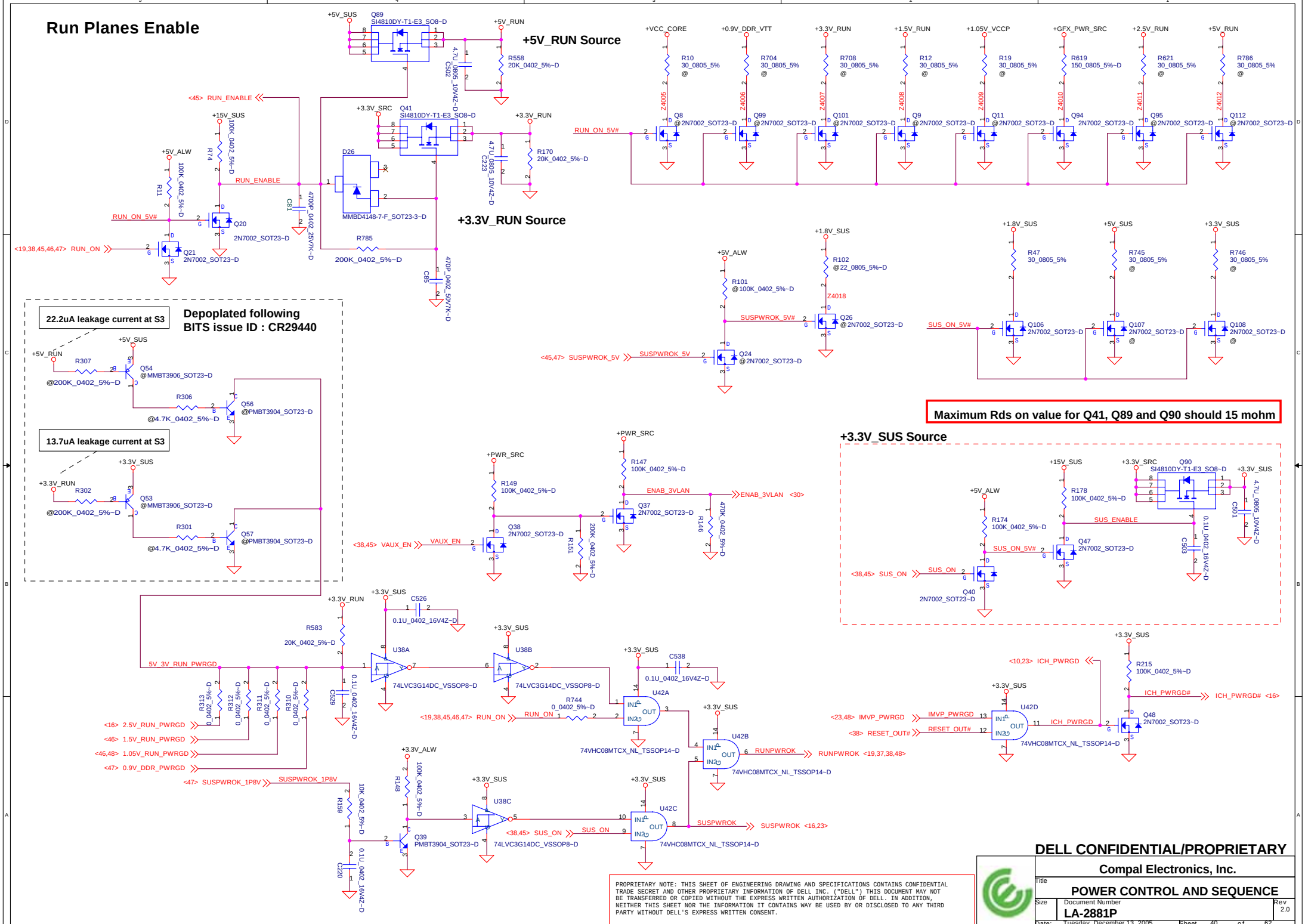

PROPRIETARY NOTE: THIS SHEET OF ENGINEERING DRAWING AND SPECIFICATIONS CONTAINS CONFIDENTIAL TRADE SECRET AND OTHER PROPRIETARY INFORMATION OF DELL INC. ("DELL") THIS DOCUMENT MAY NOT BE TRANSFERRED OR COPIED WITHOUT THE EXPRESS WRITTEN AUTHORIZATION OF DELL. IN ADDITION, NEITHER THIS SHEET NOR THE INFORMATION IT CONTAINS WAY BE USED BY OR DISCLOSED TO ANY THIRD PARTY WITHOUT DELL'S EXPRESS WRITTEN CONSENT.

DELL CONFIDENTIAL/PROPRIETARY

Compal Electronics, Inc.

Title: POWER CONTROL AND SEQUENCE

Size: | Document Number: LA-2881P | Rev: 2.0

Date: Tuesday, December 13, 2005 | Sheet 40 of 62

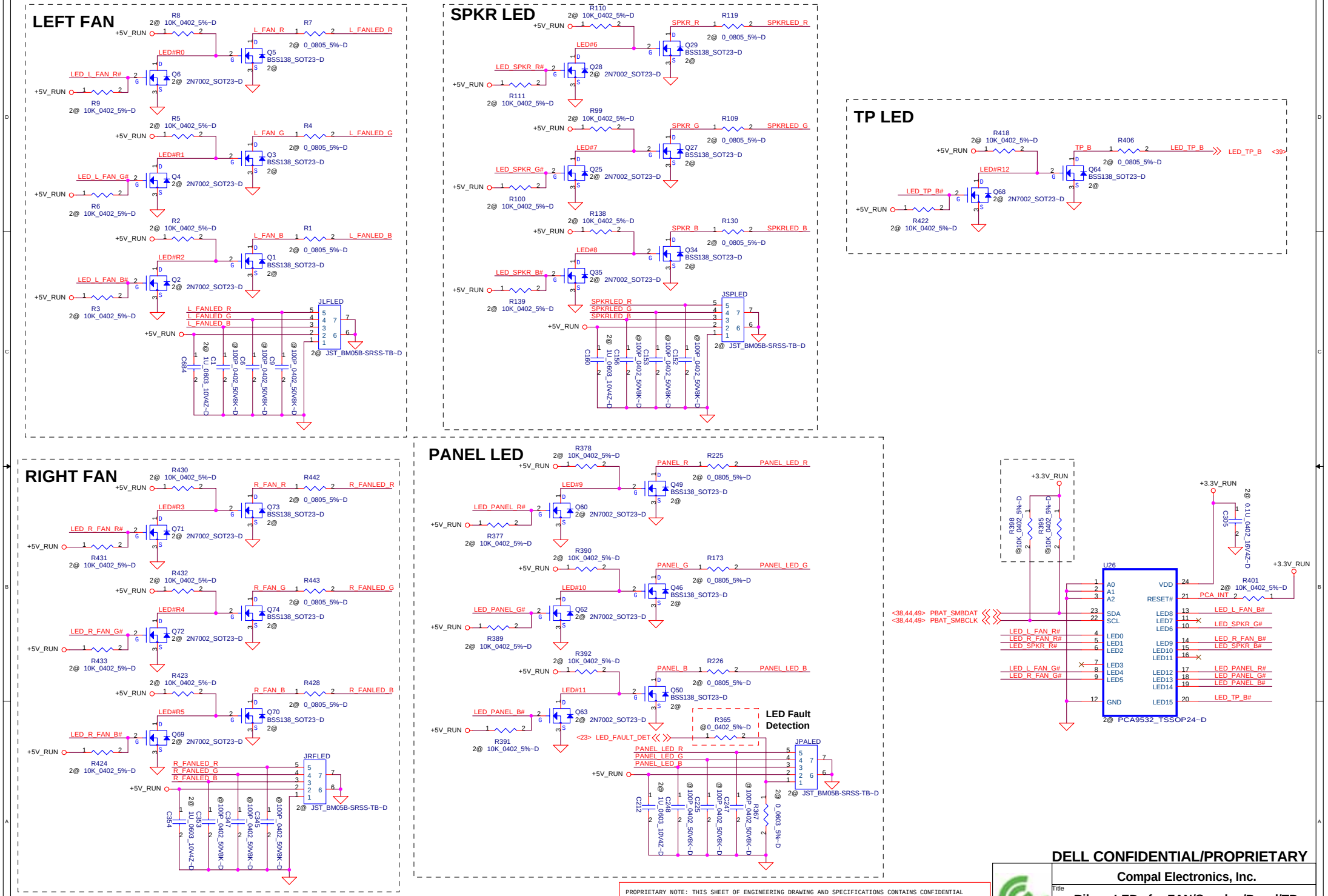

DELL CONFIDENTIAL/PROPRIETARY

Compal Electronics, Inc.

Title: Rikers LEDs for FAN/Speaker/Panel/TP

Size | Document Number: LA-2881P | Rev 2.0

Date: Tuesday, December 13, 2005 | Sheet 41 of 62

PROPRIETARY NOTE: THIS SHEET OF ENGINEERING DRAWING AND SPECIFICATIONS CONTAINS CONFIDENTIAL TRADE SECRET AND OTHER PROPRIETARY INFORMATION OF DELL INC. ("DELL") THIS DOCUMENT MAY NOT BE TRANSFERRED OR COPIED WITHOUT THE EXPRESS WRITTEN AUTHORIZATION OF DELL. IN ADDITION, NEITHER THIS SHEET NOR THE INFORMATION IT CONTAINS WAY BE USED BY OR DISCLOSED TO ANY THIRD PARTY WITHOUT DELL'S EXPRESS WRITTEN CONSENT.

HEX STANDOFF

STAND1 @HEX_STANDOFF-D
STAND2 @HEX_STANDOFF-D
STAND3 @HEX_STANDOFF-D
STAND4 @HEX_STANDOFF-D

Fiducial Mark

FD13 SMD40M80
FD14 SMD40M80
FD15 SMD40M80
FD9 SMD40M80
FD10 SMD40M80
FD7 SMD40M80
FD8 SMD40M80
FD5 SMD40M80
FD6 SMD40M80
FD1 SMD40M80
FD3 SMD40M80
FD16 SMD40M80
FD11 FIDUCAL
FD2 FIDUCAL
FD4 FIDUCAL
FD17 FIDUCAL
FD12 FIDUCAL
FD18 FIDUCAL

H5 @C315D126
H6 @C315D126
H18 @C315D126
H27 @C315D126
H30 @C315D126
H26 @C315D126
H7 @TC236BC315D118
H1 @C315D91
H9 @C315D91
H2 @C315D91
H10 @C315D91
H3 @C315D110
H16 @C276D110
H20 @C276D110
H15 @TC315BC197D110
H29 @C276D110
H13 @C276D126
H11 @C276D126
H22 @C354D126
H19 @O531X571D452X492
H8 @O531X571D452X492
H28 @O236X134D236X134N
H4 @C134D134N

H24 C276D110 3@
H25 C276D110 3@
H14 C276D110 3@
H17 C276D110 3@

VGA Standoffs

H21 C276D146

MDC Standoff

H12 C315D102 1@
H23 C275D102 1@

Keyboard Standoff for Zanzibar

H31 @TP276

Power SW Support Standoff

MY1 MYLAR(ZZZ) NC @MYLAR_DIMMA-D
MY2 MYLAR(ZZZ) NC @SD_MINIPCI-D
BRKT1 IO BRACKET(ZZZ) NC @IO_BRACKET-D
PCB BARE PCB NC ZRS_LA-2881P _REV2_M/B-D
MY3 MYLAR(ZZZ) NC @MYLAR_DIMMB-D
TAPE1 CONDUCTIVE TAPE(ZZZ) NC @CONDUCTIVE_TAPE-D
RUBER1 SD_RUBBER (ZZZ) NC @SD_RUBBER-D
CABLE1 Cable NC @17" LCD Caxil Cable
MY4 MYLAR(ZZZ) NC @MYLAR_MINIPCI-D
ZZZ1 LOG LOW GASKET(ZZZ) NC @ LOG_LOW_GASKET-D
COVER1 RJ11_RUBBER (ZZZ) NC @RJ11_RUBBER-D
CABLE4 Cable NC @RJ11 MDC Cable
CABLE2 Cable NC @BlueTooth Cable
CABLE3 Cable NC @Switch Board Cable
CABLE5 Cable NC @Media Board Cable
CABLE6 Cable NC @LED FFC Cable

HW POP option control table

	ZUMA	Zanzibar	Rikers	Suva	
R612	No-POP	No-POP	No-POP	POP	
R498	No-POP	No-POP	POP	No-POP	
R515	1.24K	1.24K	1.15K	1.15K	1.24K P/N (SD01412418L) 1.15K P/N (SD01411518L)
R410	750 ohm	750 ohm	470 ohm	470 ohm	750 ohm P/N (SD02875008L) 470 ohm P/N (SD02847008L)
C414, C417, C422 C413, C416, C421	82 pF	47 pF	47 pF	47 pF	82 pF P/N (SE071820J8L) 47 pF P/N (SE071470J8L)
L43, L44, L45	1.8 uH	0.47 uH	0.47 uH	0.47 uH	1.8 uH P/N (SHI0118AK8L) 0.47 uH P/N (SHI00002C0L)
U6(MCH)	UMA	Discrete	Discrete	Discrete	UMA P/N (SA0000059GL) Dis P/N (SA00000KDBL)
U23(LOM)	4401E	4401E	5752	5752	4401E P/N (SA00000oD0L) 5752 P/N (SA00000o71L)
R359, R360 R364, R366	49.9_1% ohm	49.9_1% ohm	48.7_1% ohm	48.7_1% ohm	49.9_1% ohm (SD014499A8L) 48.7_1% ohm (SD014487A8L)
R205	15 ohm	15 ohm	33 ohm	33 ohm	15 ohm P/N (SD028150A8L) 33 ohm P/N (SD028330A8L)

PROPRIETARY NOTE: THIS SHEET OF ENGINEERING DRAWING AND SPECIFICATIONS CONTAINS CONFIDENTIAL TRADE SECRET AND OTHER PROPRIETARY INFORMATION OF DELL INC. ("DELL") THIS DOCUMENT MAY NOT BE TRANSFERRED OR COPIED WITHOUT THE EXPRESS WRITTEN AUTHORIZATION OF DELL. IN ADDITION, NEITHER THIS SHEET NOR THE INFORMATION IT CONTAINS WAY BE USED BY OR DISCLOSED TO ANY THIRD PARTY WITHOUT DELL'S EXPRESS WRITTEN CONSENT.

DELL CONFIDENTIAL/PROPRIETARY

Compal Electronics, Inc.

Title: PAD and Standoff

Size | Document Number: LA-2881P | Rev 2.0

Date: Tuesday, December 13, 2005 | Sheet 42 of 62

PS_ID Detector

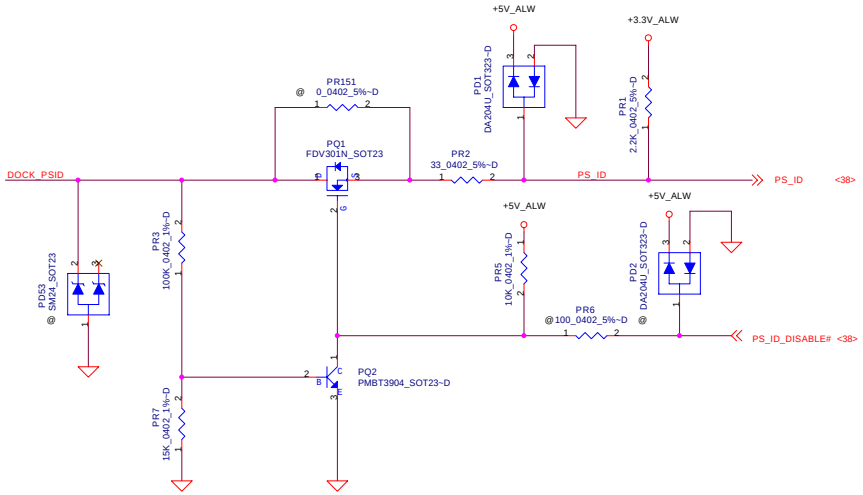

3.3V RTC Power

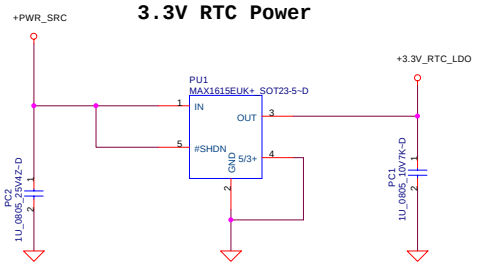

+DC_IN Source

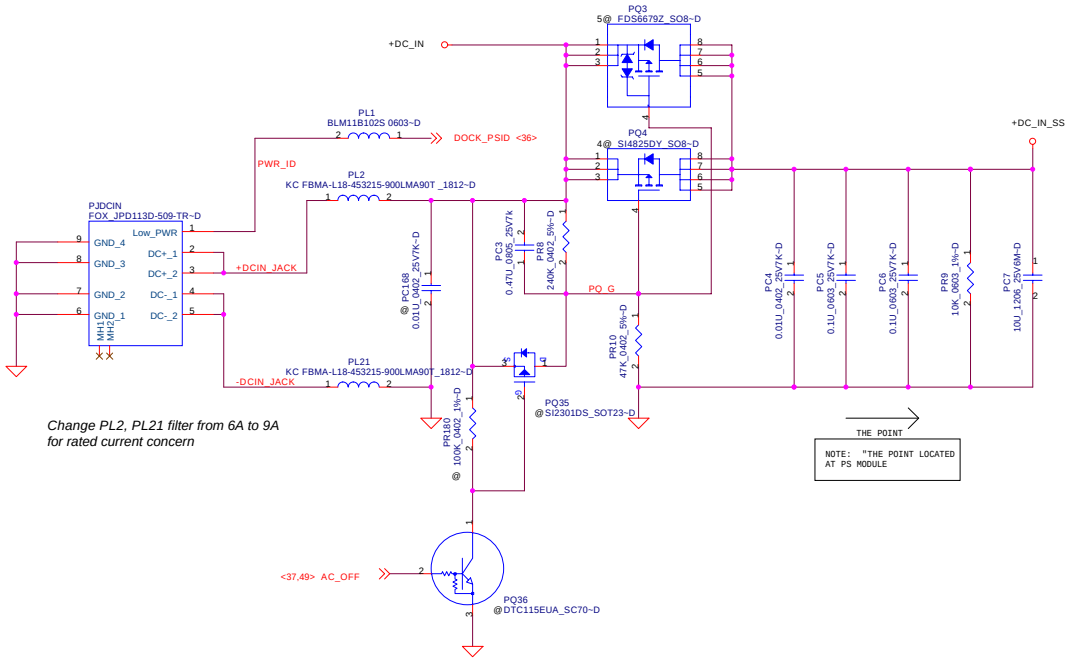

Change PL2, PL21 filter from 6A to 9A for rated current concern

THIS SHEET OF ENGINEERING DRAWING IS THE PROPRIETARY PROPERTY OF COMPAL ELECTRONICS, INC. AND CONTAINS CONFIDENTIAL AND TRADE SECRET INFORMATION. THIS SHEET MAY NOT BE TRANSFERED FROM THE CUSTODY OF THE COMPETENT DIVISION OF R&D DEPARTMENT EXCEPT AS AUTHORIZED BY COMPAL ELECTRONICS, INC. NEITHER THIS SHEET NOR THE INFORMATION IT CONTAINS MAY BE USED BY OR DISCLOSED TO ANY THIRD PARTY WITHOUT PRIOR WRITTEN CONSENT OF COMPAL ELECTRONICS, INC.

DELL CONFIDENTIAL/PROPRIETARY

Compal Electronics, Inc.

Title	**+DCIN**	
Size	Document Number	Rev 2.0
Date: Tuesday, December 13, 2005	Sheet 43 of 62	

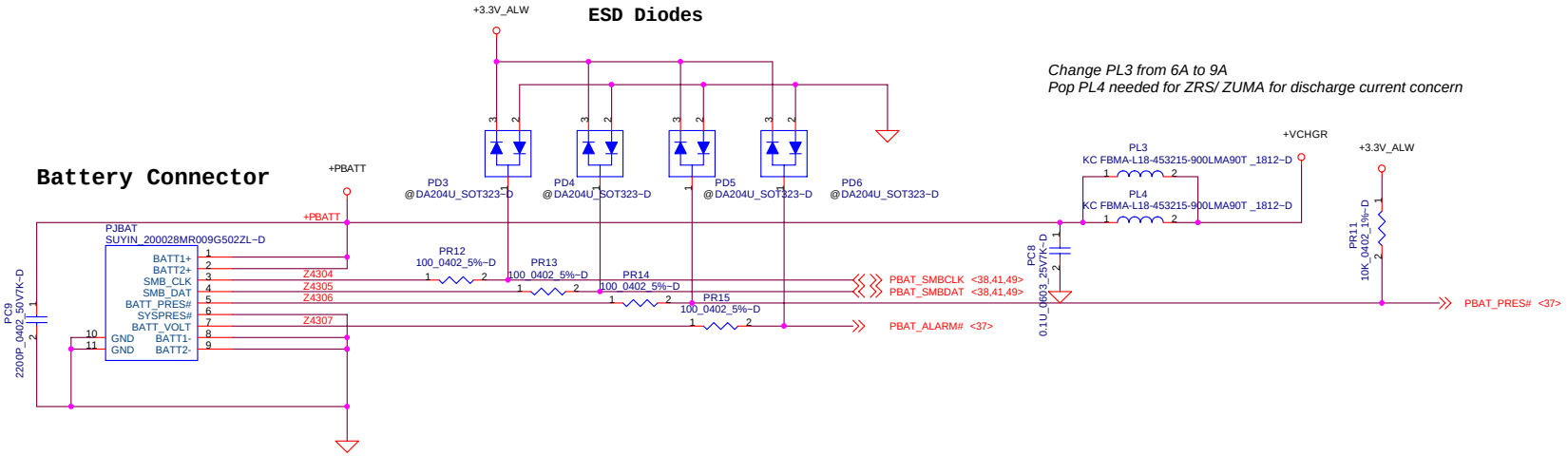

THIS SHEET OF ENGINEERING DRAWING IS THE PROPRIETARY PROPERTY OF COMPAL ELECTRONICS, INC. AND CONTAINS CONFIDENTIAL AND TRADE SECRET INFORMATION. THIS SHEET MAY NOT BE TRANSFERED FROM THE CUSTODY OF THE COMPETENT DIVISION OF R&D DEPARTMENT EXCEPT AS AUTHORIZED BY COMPAL ELECTRONICS, INC. NEITHER THIS SHEET NOR THE INFORMATION IT CONTAINS MAY BE USED BY OR DISCLOSED TO ANY THIRD PARTY WITHOUT PRIOR WRITTEN CONSENT OF COMPAL ELECTRONICS, INC.

DELL CONFIDENTIAL/PROPRIETARY

Compal Electronics, Inc.

Title: **Battery Conn**

Size | Document Number | Rev 2.0

Date: Tuesday, December 13, 2005 | Sheet 44 of 62

DC +3.3V/ +5V

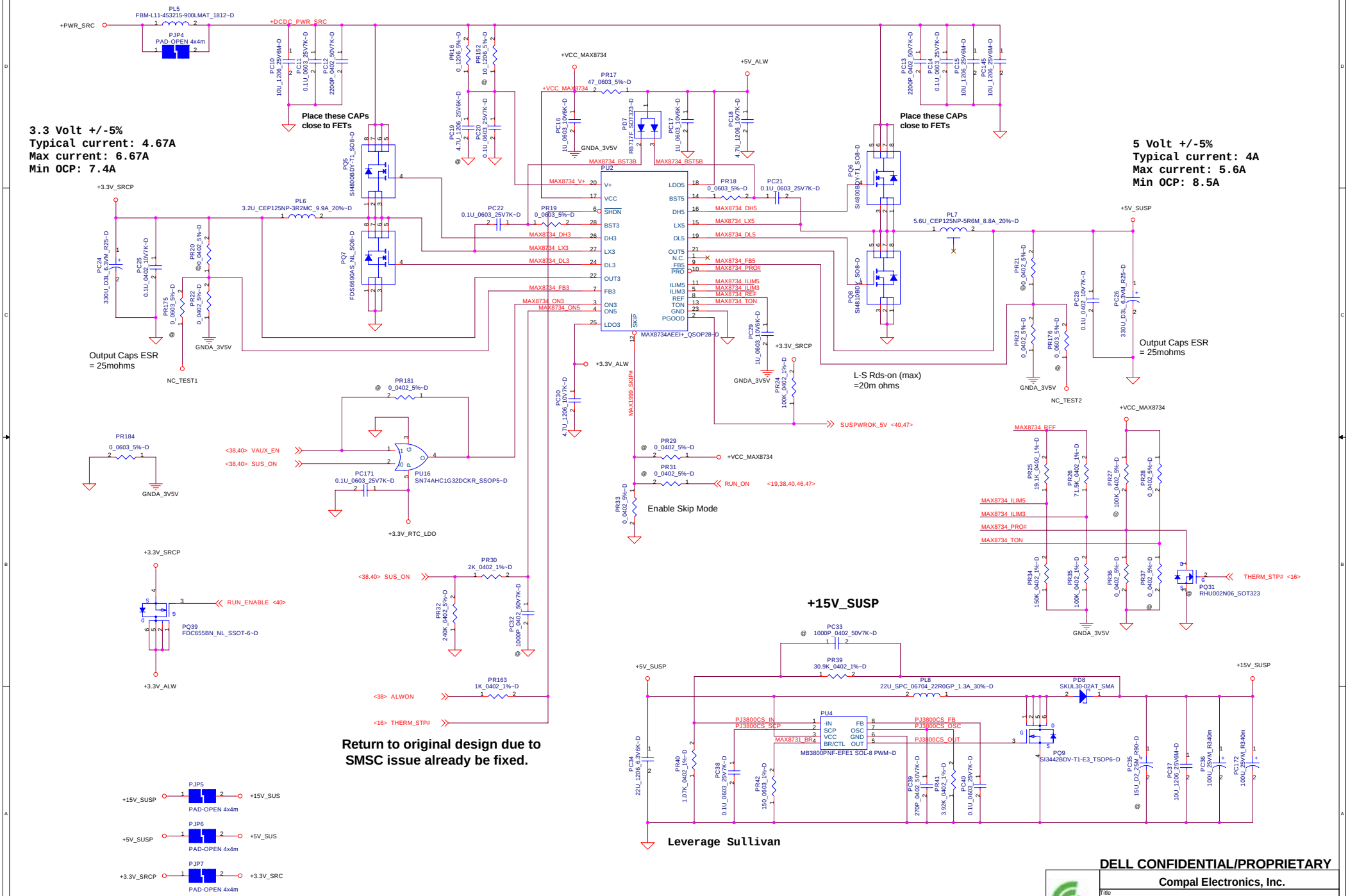

THIS SHEET OF ENGINEERING DRAWING IS THE PROPRIETARY PROPERTY OF COMPAL ELECTRONICS, INC. AND CONTAINS CONFIDENTIAL AND TRADE SECRET INFORMATION. THIS SHEET MAY NOT BE TRANSFERED FROM THE CUSTODY OF THE COMPETENT DIVISION OF R&D DEPARTMENT EXCEPT AS AUTHORIZED BY COMPAL ELECTRONICS, INC. NEITHER THIS SHEET NOR THE INFORMATION IT CONTAINS MAY BE USED BY OR DISCLOSED TO ANY THIRD PARTY WITHOUT PRIOR WRITTEN CONSENT OF COMPAL ELECTRONICS, INC.

DELL CONFIDENTIAL/PROPRIETARY

Compal Electronics, Inc.

Title: +3.3V/+5V/+15V

Size: | Document Number: | Rev: 2.0

Date: Tuesday, December 13, 2005 | Sheet 45 of 62

+1.5V_RUNP / +VCCP_1P05VP

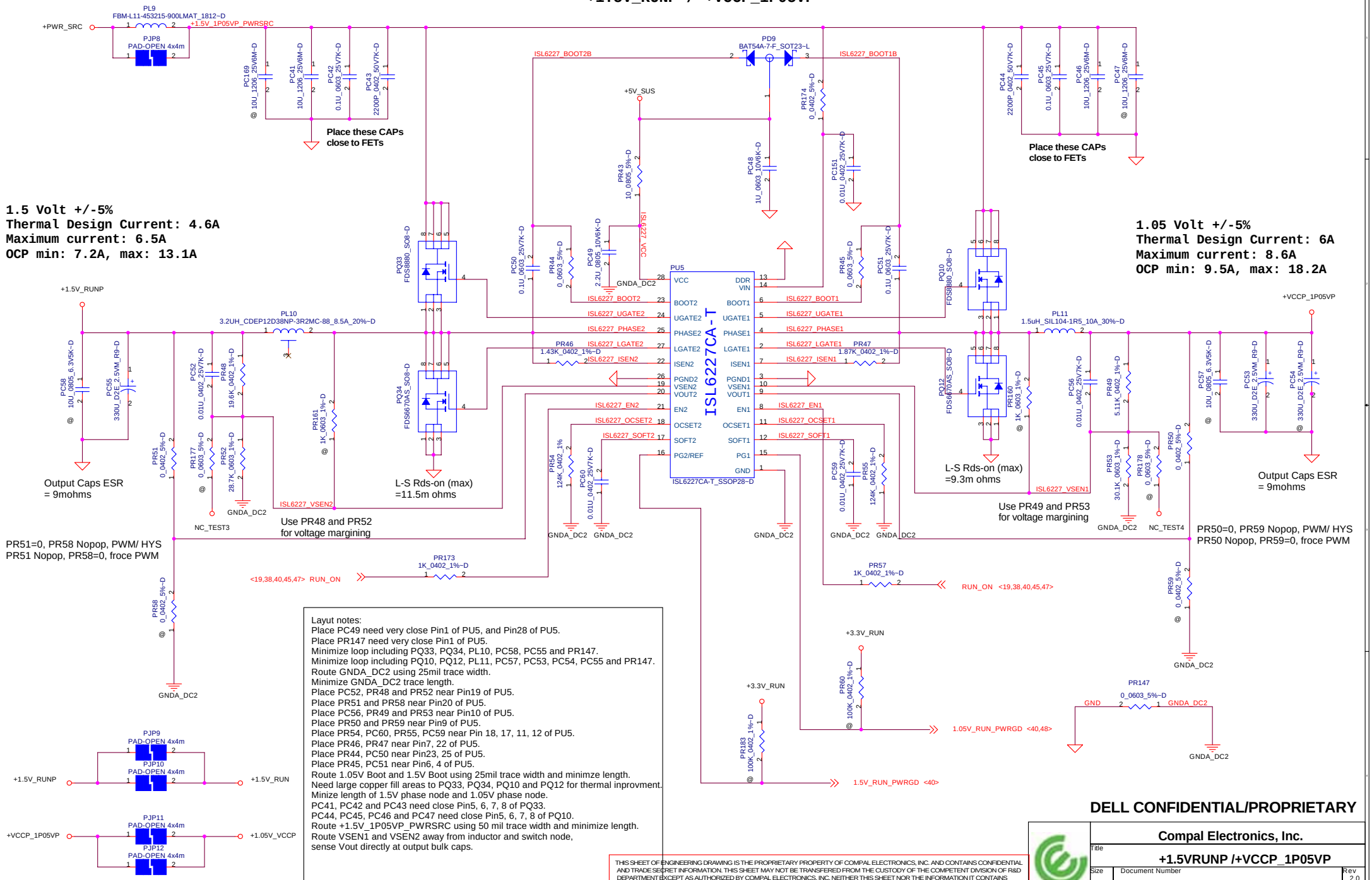

Layut notes:
Place PC49 need very close Pin1 of PU5, and Pin28 of PU5.
Place PR147 need very close Pin1 of PU5.
Minimize loop including PQ33, PQ34, PL10, PC58, PC55 and PR147.
Minimize loop including PQ10, PQ12, PL11, PC57, PC53, PC54, PC55 and PR147.
Route GNDA_DC2 using 25mil trace width.
Minimize GNDA_DC2 trace length.
Place PC52, PR48 and PR52 near Pin19 of PU5.
Place PR51 and PR58 near Pin20 of PU5.
Place PC56, PR49 and PR53 near Pin10 of PU5.
Place PR50 and PR59 near Pin9 of PU5.
Place PR54, PC60, PR55, PC59 near Pin 18, 17, 11, 12 of PU5.
Place PR46, PR47 near Pin7, 22 of PU5.
Place PR44, PC50 near Pin23, 25 of PU5.
Place PR45, PC51 near Pin6, 4 of PU5.
Route 1.05V Boot and 1.5V Boot using 25mil trace width and minimze length.
Need large copper fill areas to PQ33, PQ34, PQ10 and PQ12 for thermal inprovment.
Minize length of 1.5V phase node and 1.05V phase node.
PC41, PC42 and PC43 need close Pin5, 6, 7, 8 of PQ33.
PC44, PC45, PC46 and PC47 need close Pin5, 6, 7, 8 of PQ10.
Route +1.5V_1P05VP_PWRSRC using 50 mil trace width and minimize length.
Route VSEN1 and VSEN2 away from inductor and switch node,
sense Vout directly at output bulk caps.

THIS SHEET OF ENGINEERING DRAWING IS THE PROPRIETARY PROPERTY OF COMPAL ELECTRONICS, INC. AND CONTAINS CONFIDENTIAL AND TRADE SECRET INFORMATION. THIS SHEET MAY NOT BE TRANSFERED FROM THE CUSTODY OF THE COMPETENT DIVISION OF R&D DEPARTMENT EXCEPT AS AUTHORIZED BY COMPAL ELECTRONICS, INC. NEITHER THIS SHEET NOR THE INFORMATION IT CONTAINS MAY BE USED BY OR DISCLOSED TO ANY THIRD PARTY WITHOUT PRIOR WRITTEN CONSENT OF COMPAL ELECTRONICS, INC.

DELL CONFIDENTIAL/PROPRIETARY

Compal Electronics, Inc.	
Title	+1.5VRUNP /+VCCP_1P05VP
Size	Document Number
Rev	2.0
Date: Tuesday, December 13, 2005	Sheet 46 of 62

+1.8V_SUSP/ +0.9V_DDR_VTTP
DDR2 Termination

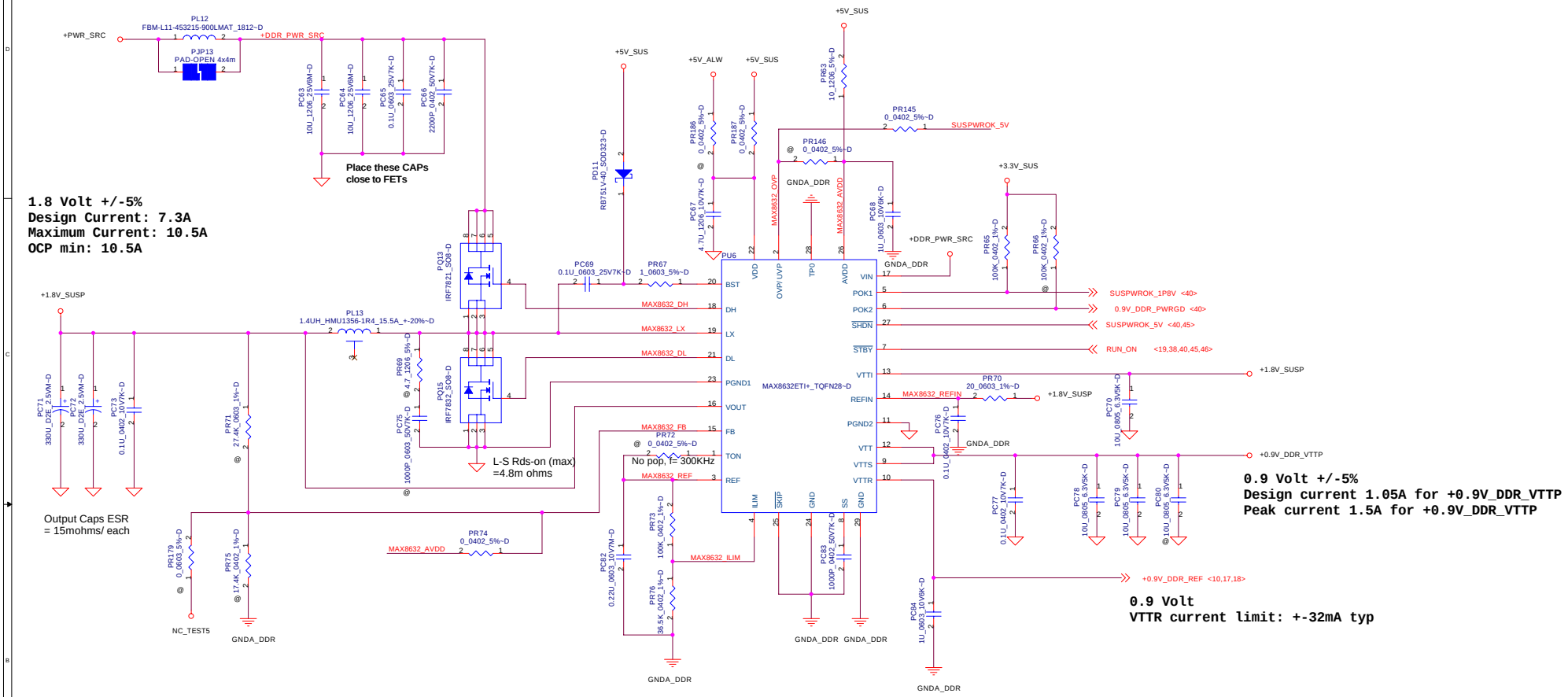

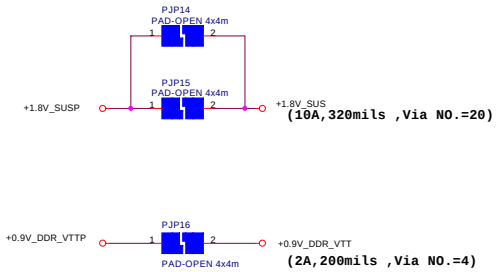

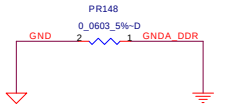

PROPRIETARY NOTE: THIS SHEET OF ENGINEERING DRAWING AND SPECIFICATIONS CONTAINS CONFIDENTIAL TRADE SECRET AND OTHER PROPRIETARY INFORMATION OF DELL INC. ("DELL") THIS DOCUMENT MAY NOT BE TRANSFERRED OR COPIED WITHOUT THE EXPRESS WRITTEN AUTHORIZATION OF DELL. IN ADDITION, NEITHER THIS SHEET NOR THE INFORMATION IT CONTAINS WAY BE USED BY OR DISCLOSED TO ANY THIRD PARTY WITHOUT DELL'S EXPRESS WRITTEN CONSENT.

DELL CONFIDENTIAL/PROPRIETARY

Title: +1.8VSUSP/ +0.9V_DDR_VT

Size | Document Number: LA-2881P | Rev: 2.0

Date: Tuesday, December 13, 2005 | Sheet 47 of 62

+VCC_CORE IMVP-6

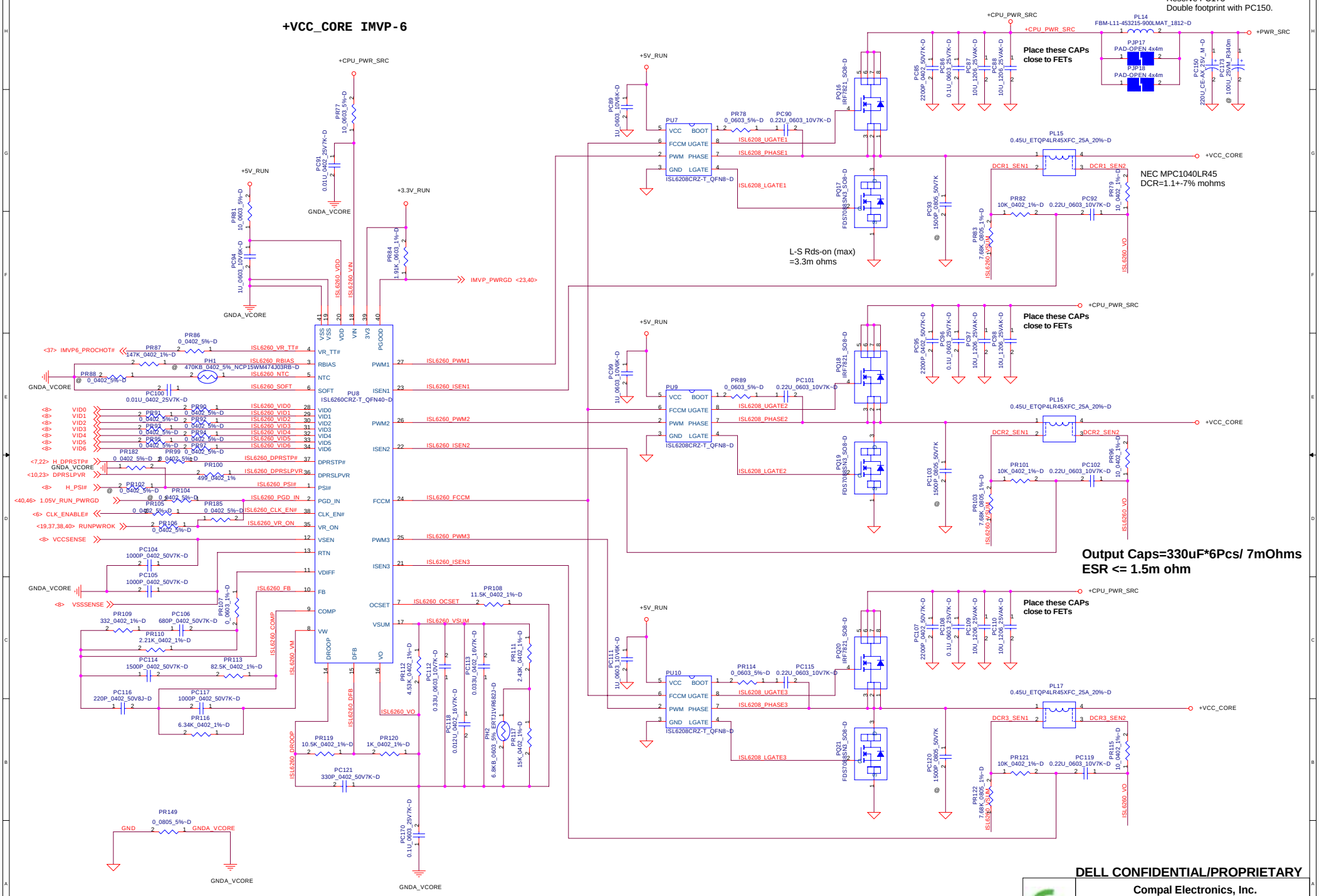

THIS SHEET OF ENGINEERING DRAWING IS THE PROPRIETARY PROPERTY OF COMPAL ELECTRONICS, INC. AND CONTAINS CONFIDENTIAL AND TRADE SECRET INFORMATION. THIS SHEET MAY NOT BE TRANSFERED FROM THE CUSTODY OF THE COMPETENT DIVISION OF R&D DEPARTMENT EXCEPT AS AUTHORIZED BY COMPAL ELECTRONICS, INC. NEITHER THIS SHEET NOR THE INFORMATION IT CONTAINS MAY BE USED BY OR DISCLOSED TO ANY THIRD PARTY WITHOUT PRIOR WRITTEN CONSENT OF COMPAL ELECTRONICS, INC.

DELL CONFIDENTIAL/PROPRIETARY

Compal Electronics, Inc.

Title: +VCORE

Size: | Document Number: | Rev: 2.0

Date: Tuesday, December 13, 2005 | Sheet 48 of 62

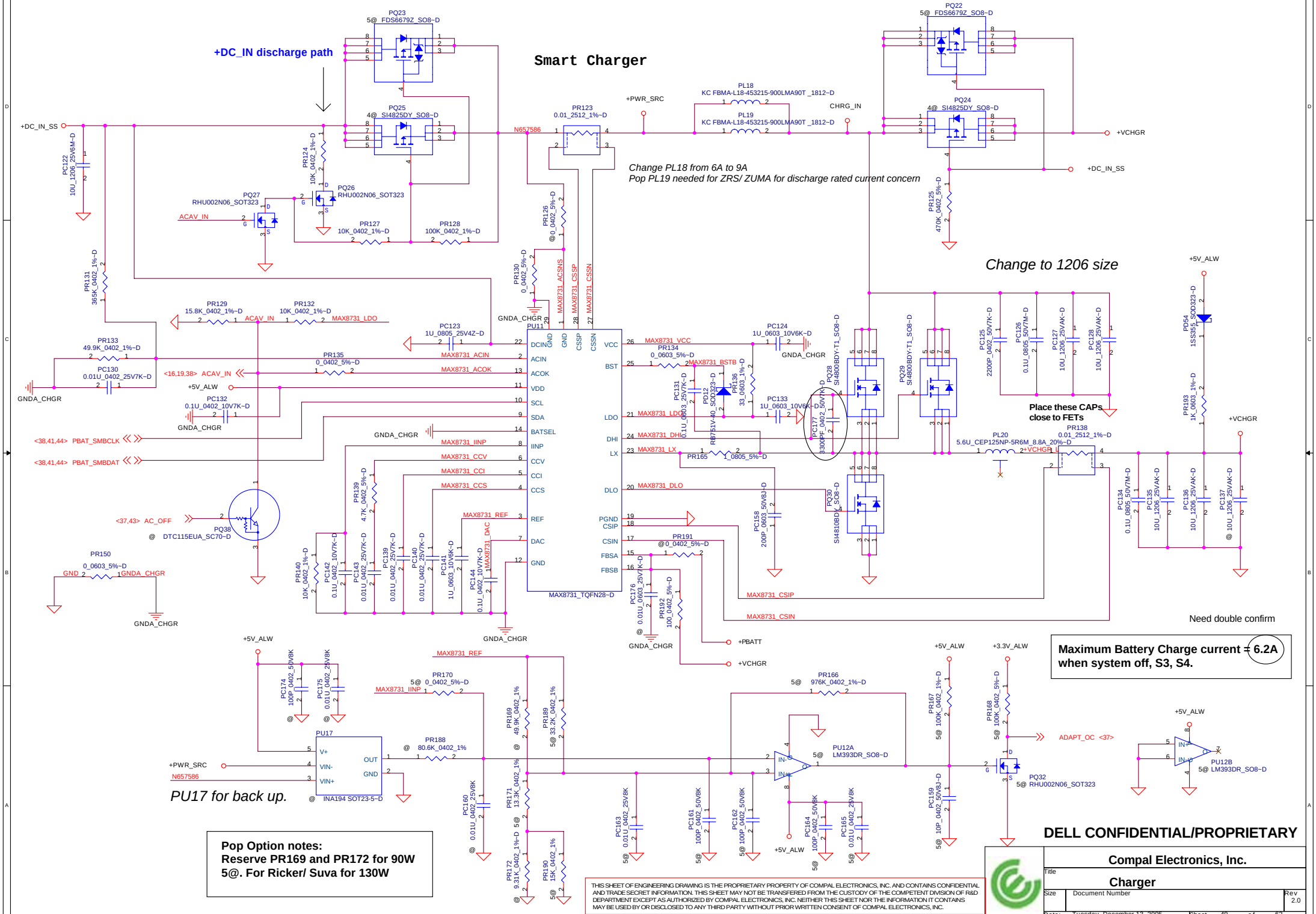
Smart Charger
+DC_IN discharge path
Change PL18 from 6A to 9A
Pop PL19 needed for ZRS/ ZUMA for discharge rated current concern
Change to 1206 size
Place these CAPs close to FETs
Need double confirm
Maximum Battery Charge current = 6.2A when system off, S3, S4.
PU17 for back up.
Pop Option notes:
Reserve PR169 and PR172 for 90W
5@. For Ricker/ Suva for 130W
DELL CONFIDENTIAL/PROPRIETARY
Compal Electronics, Inc.
Charger
Tuesday, December 13, 2005

Version Change List (P. I. R. List)

Item	Page#	Title	Date	Request Owner	Issue Description	Solution Description	Rev.
1	37	SIO	06/22/2005	Compal	BID change to X00.	Pop R549, depop R553.	X00
2	42	Rikers LED	06/22/2005	Dell	Reserved LCM and Backlight circuit and depop on Rikers.	Depop Q104~Q107, R913~R918, C910, C920, JLMLED and JKBLED.	X00
3	20	CRT	06/27/2005	Compal	Buffers are duplicated on the video card, so added by pass resistors on Discrete mode.	Added R967,R968,C923,C924	X00
4	20	CRT	06/27/2005	Compal	Connected HSYNC and VSYNC to docking connector from the output of U194 and U195.		X00
5	38	EMC5004	07/06/2005	Compal	Added a DIP switch for the Flash recovery disable/enable function at develop phase.	Added SW1 and pop R591. Added R622, R623 reserved for bypass SW1.	X00
6	37	ECE5018	07/06/2005	Compal	+3VRUN leakage at AC mode in S5	Change R533 pull up from +3.3V_SRC to +3.3V_RUN	X00
7	37	ECE5018	07/08/2005	Compal	Internal speaker no sound.	Pop R545	X00
8	07	CPU	07/11/2005	Dell	Updated ITP pullup resistor values as M07-discrete-A03 Ref. Sch.	Change R81~R86, R77, R196 value.	X00
9	07	CPU	07/11/2005	Dell	Updated H_PROCHOT# pullup resistor values as M07-discrete-A03 Ref. Sch.	Change R548 to 75 ohm.	X00
10	40	POWER SEQUENCE	07/11/2005	Dell	Updated Power Good circuit as M07-discrete-A03 Ref. Sch.	Added R617, R619, R620, R621, Q51, Q52, Q53, Q64.	X00
11	06	CLOCK GENERATOR	07/12/2005	Dell	Updated clock GEN. resistor values as COE X04 Ref. Sch.	Change R36,R37,R43,R45,R49,R919,R33,R35 value to 15 ohm.	X00
12	36	Docking Connector	07/12/2005	Dell	Update docking circuit as COE A03 ref. sch.	Made R899,R900,R901,R902 no stuff.	X00
13	16	Thermal sensor	07/12/2005	Dell	Change R701 so that C158 and C159 are between LDO_IN and R701.	Change R701 location.	X00
14	19 & 37	GFX CONN. ECE5018	07/12/2005	Dell	Follow COE graphic card A05 ref. sch.	Change the net name of pin1 of U5 to SIO_GFX_EN	X00
15	34	MINI card	07/12/2005	Dell	No filtering on +3.3V_LAN	Added C925	X00
16	07	CPU	07/12/2005	Dell	Per Intel checklist rev 1.3 and CRB rev 1.4	Added pull down R969 for TEST1	X00
17	40	POWER SEQUENCE	07/12/2005	Dell	Follow COE graphic card A05 ref. sch.	Added RUN_ENABLE off-page connection	X00
18	14	Calistoga-PWR	07/12/2005	Dell	Per Intel checklist rev 1.3 and CRB rev 1.4	Added C926 and C927.	X00
19	40	POWER SEQUENCE	07/13/2005	Dell	Follow COE UMA A07 and Core discrete A04 ref. sch.	Added R970~R975, C928, Q118 and U40C.	X00
20	16	Thermal sensor	07/13/2005	Dell	Follow COE UMA A07 and Core discrete A04 ref. sch.	Added 2.5V_RUN_PWRGD off-page connection on pin 31 of U4	X00
21	33	R5C832	07/13/2005	Dell	May potentially have leakage current into R5C832.	Added R976 and no stuff.	X00
22	26	CODEC	07/13/2005	Dell	Change GPIO0 control to HP_NB_SENSE, internal EQ will be controlled by codec jack sence.	Connected HP_NB_SENSE to pin 21 of U188, and added R977 no stuff.	X00
23	26 & 27	CODEC Amplifier	07/13/2005	Dell	Move PC BEEP circuit from CD inputs of codec to internal speaker amplifier.	C414 depop and change R381 value to 2.2K ohm.	X00
24	27	Amplifier	07/13/2005	Dell	Add place holders for 47pF caps on positive inputs of speaker amplifier. Change GPRS immunity caps to no stuff by default. Signal removed to allow BEEP while headphones plugged in.	Added C929,C930 no stuff. Depop C885,C886. Remove Q29.	X00

DELL CONFIDENTIAL/PROPRIETARY

PROPRIETARY NOTE: THIS SHEET OF ENGINEERING DRAWING AND SPECIFICATIONS CONTAINS CONFIDENTIAL TRADE SECRET AND OTHER PROPRIETARY INFORMATION OF DELL INC. ("DELL") THIS DOCUMENT MAY NOT BE TRANSFERRED OR COPIED WITHOUT THE EXPRESS WRITTEN AUTHORIZATION OF DELL. IN ADDITION, NEITHER THIS SHEET NOR THE INFORMATION IT CONTAINS WAY BE USED BY OR DISCLOSED TO ANY THIRD PARTY WITHOUT DELL'S EXPRESS WRITTEN CONSENT.

Version Change List (P. I. R. List)

Item	Page#	Title	Date	Request Owner	Issue Description	Solution Description	Rev.
25	33	1394	07/13/2005	Dell	Reserved common mode chokes for EMI and added 0 ohm resistors to bypass 1394 signals for cost saving.	Added R978~R981 and L90, L91 depop.	X00
26	34	EXPRESS CARD	07/13/2005	Dell	Reserved common mode chokes for EMI and added 0 ohm resistors to bypass USB signals for cost saving.	Added R982, R983 and L92 depop.	X00
27	24	ICH7-M	07/14/2005	Dell	Follow COE ICH A03 ref. sch.	Depop C349, C350, C359.	X00
28	23	ICH7-M	07/14/2005	Dell	Follow COE ICH A03 ref. sch.	Change R711 from 8.2K no stuff to 10K stuff.	X00
29	38	EMC5004	07/14/2005	Dell	ITP_DBRESET# not on wake pin.	Swapped ITP_DBRESET# and RUN_ON_D.	X00
30	37	ECE5018	07/14/2005	Dell	SPDIF_SHDN at the codec is +5V.	Connected SPDIF_SHDN to pin 76 of U36.	X00
31	37	ECE5018	07/14/2005	Dell	Follow COE Latitude EC A02 ref. sch.	Added GPIOs AC_OFF and LOM_CABLE_DETECT.	X00
32	37	ECE5018	07/14/2005	Dell	Missing series resistor on Xtal.	Added R984.	X00
33	3	Index	07/14/2005	Compal	Update PCI table.		X00
34	16	Thermal sensor	07/14/2005	Dell	Change decoupling for VDD_5V	Swap location of C160 and C161.	X00
35	37	ECE5018	07/15/2005	Dell	Removed level shift circuit.	Delete R546, R547, Q42	X00
36	40	POWER SEQUENCE	07/15/2005	Dell	Add +2.5V_RUN bleed of ckt as UMA A07 schematic.	Added R988, Q121 and no stuff.	X00
37	39/41/42	TP LED	07/15/2005	Dell	Will use tri-color TP LED on Rikers.	Added R985,R986,R987,Q119,Q120. Remove LCM circuit and connected TP LED control signal.	X00
38	40	POWER CONTROL	07/15/2005	Dell	Follow COE UMA A07 ref. schematic.	Connected the pin 1 of R645 to +5V_ALW and pin 1 of R644 to +15V_SUS. R646,R647 no stuff and change R644 value to 100K.	X00
39	13	Calistoga	07/19/2005	Compal	Changed resistor package from 0402 to 0603 for Increasing VCCD_LVDS Power Rating.	Changed R168, R169, R182, R183.	X00
40	30/37	LOM/ECE5018	07/19/2005	Dell	5752M Hooks not in place. Need to connect Pin C04 (Energy Detect to pin 75 GPIOC1 of the champion chip)	Added R228 (5@)	X00
41	30	LOM	07/19/2005	Dell	LOM_LOW_PWR signal must be connected to 4401 Export# signal also.	Added R231 (4@)	X00
42	33	R5C832	07/19/2005	Dell	Rename +3V_PHY to +3VRUN_PHY per ref schematic.	Changed Net Name	X00
43	33	R5C832	07/19/2005	Dell	UDIO3, UDIO4, XDEN, MSEN pins can be pulled up to +3V_R5C832 through a single 10k resistor.	Deleted R487, R488, R489.	X00
44	33	R5C832	07/19/2005	Dell	Rename +XD_VCC to +3VRUN_XD per ref schematic	Changed Net Name	X00
45	33	R5C832	07/19/2005	Dell	Rename +VCC_5IN1 to +3VRUN_CARD per ref schematic	Changed Net Name	X00
46	33	R5C832	07/19/2005	Dell	150k-ohm pull-down to GND is needed on +VCC_5IN1 for media card detection per Ricoh. This is R21 on M07 ref schematic	Added R501	X00
47	7/37	CPU/ECE5018	07/20/2005	Dell	Rename H_PROCHOT# to CPU_PROCHOT# on page 7. Rename H_PROCHOT# to IMVP6_PROCHOT# on page 49, and route to ECE5018 pin 77. Add 100k ohm pull-up on IMPV6_PROCHOT# to +3.3V_RUN on page 37. Rename PROCHOT_SIO# (page 37) to CPU_PROCHOT# and route to cpu pin D21 (leave pull-up)	Added R60 (100K Pull Up).	X00

DELL CONFIDENTIAL/PROPRIETARY

PROPRIETARY NOTE: THIS SHEET OF ENGINEERING DRAWING AND SPECIFICATIONS CONTAINS CONFIDENTIAL TRADE SECRET AND OTHER PROPRIETARY INFORMATION OF DELL INC. ("DELL") THIS DOCUMENT MAY NOT BE TRANSFERRED OR COPIED WITHOUT THE EXPRESS WRITTEN AUTHORIZATION OF DELL. IN ADDITION, NEITHER THIS SHEET NOR THE INFORMATION IT CONTAINS WAY BE USED BY OR DISCLOSED TO ANY THIRD PARTY WITHOUT DELL'S EXPRESS WRITTEN CONSENT.

Version Change List (P. I. R. List)

Item	Page#	Title	Date	Request Owner	Issue Description	Solution Description	Rev.
48	23	ICH7M	07/20/2005	Dell	SPI pullup location doesn't match DG (M07_ICH7_A04)	Moved R365 to left of R713	X00
49	23	ICH7M	07/20/2005	Dell	HDD_DET# not needed (M07_ICH7_A04)	Renamed GPIO12 to RSVD_HDD_DET#	X00
50	23	ICH7M	07/20/2005	Dell	Change SATAGP[0-3] to pullup as M07_ICH7_A04 CoE Ref Schematic	Deleted R345, R961~R966.	X00
51	33	R5C832	07/20/2005	Dell	Power switch follows up the recommended switch in ref schematic. Use the AAT4250	U26 changed to AAT4250	X00
52	36	DOCK	07/20/2005	Dell	DOCK can't be enabled	Changed DOCK pin 238 connection to ICH7M PCI_REQ0# directly from PCI Buffer (U31).	X00
53	26	CODEC	07/20/2005	Dell	Follow COE AUDIO A03 ref.sch.	Remove C414.	X00
54	6	CLOCK	07/21/2005	Dell	Item Id: CR03833 Title: Change 0.1uF cap to 10uF cap	Changed C7	X00
55	37	ECE5018	07/21/2005	Dell	Need to move the NB_MUTE GPIO to C7 (pin 73). The original GPIO CANNOT be programmed to drive.(SMSC Silicon issue)	Changed connection	X00
56	23	ICH7M	07/21/2005	Dell	Per the ICH reference schematic A04, need to move the pull-up on ICH_EC_SPI_DO to the other side of R713.	R365 has been moved to the left of R713	X00
57	37	ECE5018	07/21/2005	Dell	Media button LED always ON issue.	Connected M_LED_BK to pin 1 of U36.	X00
58	22	ICH7M	07/21/2005	Dell	ICH_INTVRMEN is missing the NP 0 ohm pulldown at pin 2 of R323.	Add R989 no stuff.	X00
59	23	ICH7M	07/21/2005	Dell	LAMP_STAT# pullup resistor should be tied to +3V_SUS.	R711 tied to +3V_SUS.	X00
60	23	ICH7M	07/21/2005	Dell	Per ICH M07 Ref Schematics Rev A04.	Changed R358 value to 680 ohms.	X00
61	23	ICH7M	07/21/2005	Dell	SIO_EXT_WAKE needs a 0 ohm series resistor at the ICH Pin AC21.	Add R990.	X00
62	24	ICH7M	07/21/2005	Dell	Per ICH M07 Ref Schematics Rev A04.	Add R991,R992 and pop C534,C362.	X00
63	25	CD-ROM	07/21/2005	Dell	Per ICH M07 Ref Schematics Rev A04	Changed R375 value to 510 ohms and JMOD name to JODD. Change the JMOD pin 37 name to IDE_LED#	X00
64	37	ECE5018	07/22/2005	Dell	SYS_PME# is pulled up to 3VRUN. It is pulled up to 3VALW in the M07 EC Ref Schematics Rev. A02	Changed R533 pulled up[to +3.3V_ALW.	X00
65	37	ECE5018	07/22/2005	Dell	SIO_GFX_EN is named differently from the Ref Schematics. It is named SIO_GFX_PWR in the M07 EC Ref Schematics Rev. A02	Changed Netname.	X00
66	33	1394	07/22/2005	Compal	For 1394 TPB0+ and TPB0- layout routing smooth.	Swap L91, R980 and R981.	X00
67	38	EMC5004	07/22/2005	Compal	EC debug requirement for design phase, will be removed after MP.	Pop JDEBG1 connector.	X00
68	16	Thermal sensor	07/23/2005	Dell	Follow GuardianII X03 reference schematics.	Add a note to U4 that states "Solder thermal pad to plane. Add 9 ground vias to pad."	X00
69	13	Calistoga	07/23/2005	Dell	Per the UMA reference schematic A07.	Add note to place C100/C99/C96 close to pin AB1/D2/A6.	X00
70	24	ICH7M	07/24/2005	Dell	C341 should be 330uF. It is currently 220uF. Per ICH M07 Ref Schematics Rev A04. (Item Id: DF04040)	Change C341 value to 330uF.	X00
71	10	Calistoga	07/24/2005	Dell	Need to POP R140 to enable testing C4 Latency.(Item Id: DF04038)	Populated R140.	X00
72	All Pages	N/A	08/02/2005	Compal	Renamed all parts Reference	All Parts but Connector	X01

DELL CONFIDENTIAL/PROPRIETARY

PROPRIETARY NOTE: THIS SHEET OF ENGINEERING DRAWING AND SPECIFICATIONS CONTAINS CONFIDENTIAL TRADE SECRET AND OTHER PROPRIETARY INFORMATION OF DELL INC. ("DELL") THIS DOCUMENT MAY NOT BE TRANSFERRED OR COPIED WITHOUT THE EXPRESS WRITTEN AUTHORIZATION OF DELL. IN ADDITION, NEITHER THIS SHEET NOR THE INFORMATION IT CONTAINS WAY BE USED BY OR DISCLOSED TO ANY THIRD PARTY WITHOUT DELL'S EXPRESS WRITTEN CONSENT.

Version Change List (P. I. R. List)

Item	Page#	Title	Date	Request Owner	Issue Description	Solution Description	Rev.
73	6/31	CLOCK/LOM	08/02/2005	Dell	Avoid running clk_pci_lan throun RN8 as Layout Issues list request.	Changed R206 as 4@. Changed CLK_PCI_LAN connection.	X01
74	37	SIO	08/02/2005	Dell	Changed BID	Changed R221, R211 as @. Changed R220, R212 as pop.	X01
75	6	CLOCK	08/03/2005	Dell	Add 0.1uF cap to +CK_VDD_MAIN so that each VDD pin has a cap (CoE CLOCK Ref Sch X05)	Added C699.	X01
76	17/18	Memory	08/03/2005	Dell	Connected pin 50 of DIMMA to pin 50 of DIMMB and named net PM_EXTTS#0_R. Remove No Stuff attribute from R118(Old Ref R213).Delete R118(Old Ref R218), 0 ohm, and connection to PM_EXTTS#1. (CoE Memory Ref X03)	Deleted R117(Old Ref R218). Populated R118(Old Ref R213)	X01
77	16	Guardian II	08/03/2005	Dell	Removed pull-up at LDO_POK. Pullup is on power sequence.(CoE Guardian II Ref X04)	Deleted R47(Old Ref R227)	X01
78	16	Guardian II	08/03/2005	Dell	Add voltage margin circuit(CoE Guardian II Ref X04)	Added R737	X01
79	16	Guardian II	08/03/2005	Dell	Add additional thermistor circuit(CoE Guardian II Ref X04)	Added R738~R743. C700, C701, Q102, Q103.	X01
80	21	ICH7M	08/03/2005	Dell	Component not required.(CoE Latitude EC Ref A03)	Unpoped C46 (Old ref C892)	X01
81	38	KBC	08/03/2005	Dell	ATF_INT# pullup should be +3.3V_SUS(CoE Latitude EC Ref A03)	Change R616(Old ref R570) pullup to +3.3V_SUS.	X01
82	10	GMCH	08/03/2005	Dell	Remove PM_EXTS#1 connection options to the SODIMM. Use this to implement C4E implementaion Only(CoE UMA Ref A08)	Deleted R701(Old ref R139)	X01
83	20	LVDS/ TV_OUT/ CRT	08/04/2005	Dell	Item Id: CR03751 Title: Add note to place 0-ohm resistors close to buffer	Added Note.	X01
84	4	Power Rails	08/08/2005	Compal	Update Power Rails	Added +3V_ALW Block	X01
85	4	SMBUS	08/08/2005	Compal	Update SMBUS Pull-Up Power Rail	Modified +3V_ALW instead of +3.3V_SRC	X01
86	77	Yonah	08/08/2005	Compal	Update ITP port resistor pop option.	Depopulated R735 as CoE Ref Schematic.	X01
87	7	Yonah	08/08/2005	Dell	Change 22uF Caps from X5R to X6S	Changed C4, C5, C7, C8, C10~C13, C15~C18, C662~C664, C658, C668~C675, C677, C678, C681, C682, C686~C689	X01
88	33	R5C832	08/12/2005	Dell	Updated the electrical countermeasure circuit for the MS Duo Adapter short issue (CoE 1394 Ref A06)	Added D22, R117. Changed Q76 to P MOSFET.	X01
89	33	R5C832	08/12/2005	Dell	Changed part for the common mode choke since the proper impedance for 1394 is 110 to 200-ohms(CoE 1394 Ref A06)	Changed L90, L91 to DLW21N121SQ2 as nopop.	X01
90	26/37	AUDIO/SIO	08/12/2005	Dell	Add GPIO to control internal speaker mute when docked and HP plugged in.	Added DOCK_HP_MUTE# signal and 100K pullup (R701).	X01
91	26/27/28	AUDIO/ Amplifier	08/12/2005	Dell	Add EAPD signal back in for future power savings opportunities. Default NP. Added EAPD to GPIO3, also 2N7002 control to speaker and sub shutdown pins. A04	Added Q104, Q105 as Nopop.	X01
92	12	GMCH	08/12/2005	Dell	NO STUFF Resistor for the CFG11 (CoE Ref Sch. 945PM_GM_M07_A00)	Nopop R678	X01
93	19/20/40	GMCH/Power	08/12/2005	Dell	Changed net name INV_PWRSRC to GFX_PWR_SRC (CoE CRT_LVDS_SVIDEO M07_A00)	Changed Netname +G_PWR_SRC to +GFX_PWR_SRC	X01
94	20	LVDS	08/12/2005	Dell	Adding SVIDEO with SPDIF option Note (CoE CRT_LVDS_SVIDEO M07_A00)	Added Note	X01
95	40	Power	08/12/2005	Dell	Added Power Down Ckt (CoE M07 System POWER SEQUENCE A01)	Changed R170, R558 to 20K as Populated	X01

DELL CONFIDENTIAL/PROPRIETARY

PROPRIETARY NOTE: THIS SHEET OF ENGINEERING DRAWING AND SPECIFICATIONS CONTAINS CONFIDENTIAL TRADE SECRET AND OTHER PROPRIETARY INFORMATION OF DELL INC. ("DELL") THIS DOCUMENT MAY NOT BE TRANSFERRED OR COPIED WITHOUT THE EXPRESS WRITTEN AUTHORIZATION OF DELL. IN ADDITION, NEITHER THIS SHEET NOR THE INFORMATION IT CONTAINS WAY BE USED BY OR DISCLOSED TO ANY THIRD PARTY WITHOUT DELL'S EXPRESS WRITTEN CONSENT.

Version Change List (P. I. R. List)

Item	Page#	Title	Date	Request Owner	Issue Description	Solution Description	Rev.
96	40	Power	08/12/2005	Dell	Patch for the Yonah ICCP issue (CoE M07 System POWER SEQUENCE A01)	Changed R476, R477, R483, R484 to 0 ohm as Populated. Added R744 as populated.	X01
97	20	LVDS	08/15/2005	Dell	Support M07 inverter on ZUMA. Duplicate pull down on PANEL_BKEN.	Depop D7, U10 and pop R152, R133.	X01
98	10/12	Calistoga	08/16/2005	Dell	Follow CoE Core/945PM_GM_M07_A01 schematic.	Adding notes for discrete implementation and depop R683.	X01
99	29	USB	08/16/2005	Dell	10uF caps at USB switches are optional.	Depop C554, C217 and C680.	X01
100	23	ICH	08/16/2005	Dell	SIO_EXT_SCI and SIO_EXT_SMI# causing leakage to +3.3V_RUN on S3 mode.	Changed pull up power rail from +3.3V_RUN to +3.3V_SUS.	X01
101	16	Thermal sensor	08/16/2005	Dell	Follow D05, ALWON is driven high and pull up is on VR reference design.	Depop R702.	X01
102	37	ECE5018	08/16/2005	Dell	Add new GPIOs(CoE Latitude EC ref A04)	Added HP_NB_SENSE back to pin 82 of U36.	X01
103	28	MDC	08/20/2005	Dell	Change disable fet to lower Vgs. Corrects circuit issues(CoE M07_MDC_A03)	Q61 changed to BSS138.	X01
104	40	Power Sequence	08/20/2005	Dell	Adding Clamp Ckt for 1.8VSUS, 3.3VUS and 5VSUS	Added R47, R745, R746, Q106~Q108. Deleted R171, R188. Changed bleed resistors from 22 to 30 ohm.	X01
105	10	GMCH	08/20/2005	Dell	Delete 40.2ohm pull down resistors for M_OCDOCMP0/1 and replace them with Test Points. Per Intel DG 1.0(CoE 945_a02)	Deleted R663, R682. Added T24, T25.	X01
106	10	GMCH	08/20/2005	Dell	Add 0.1 uf (402) for the DDR VREF at Calistoge for better noise immunity (CoE 945_a02)	Added C702 and pop C146.	X01
107	10	GMCH	08/20/2005	Dell	Remove H_DPRSTP# and H_DPSLP#. Previously they No Stuff. Per Intel (CoE yonah_m07_a01)	Deleted R720, R724.	X01
108	37	ECE5018	08/20/2005	Dell	NB_MUTE Pull down Resistor Reserved as Nopop as CoE Ref Sch (EC_A03).	Depoped R573.	X01
109	2	Block Diagram	08/20/2005	Dell	Update LOM 4401E from PCIe to PCI Bus		X01
110	33/41/42	4-in-1/LED	08/22/2005	Compal	Update Lead Free Layout Library.	Updated U29, Q76, Q5, Q3, Q1, Q73, Q74, Q70, Q29, Q27, Q34, Q49, Q46, Q50, Q36, Q12, Q64, Q66.	X01
111	23/29/37	USB	08/23/2005	Dell	Swapped the ICH USB port0 and port5.		X01
112	23	ICH	08/23/2005	Compal	LAMP_STAT# causing leakage to +3.3V_RUN and +5V_RUN on S3 mode.	Depoped R554.	X01
113	38	EMC5004	08/24/2005	Dell	FWP# should be pulled high for development and pulled down for production.	Change pop option for FWP# for development and production.	X01
114	23	ICH	08/24/2005	Dell	BITS item ID: CR05958 Change value of SPI pull-ups.	Change R537, R538, R542 value from 1K to 10K ohms.	X01
115	33	4-in-1	08/24/2005	Dell	Adding bypass MS Duo short circuits in the event that the connector would be corrected	Added R747~R750 as no pop (@).	X01
116	13	GMCH	08/24/2005	Dell	TeamTrack: BITS Item Id: CR06800 Title: Calistoga Filter Issues page 13	Added R751, R752, C703, C704.	X01
117	10/40	GMCH/Power Sequence	08/24/2005	Dell	TeamTrack: BITS Item Id: DF06790 Title: Power Sequence Circuit, and C4-E and SPDIF Issues	Populated R302, R307, Q54, Q53, R306, R301, Q56, Q57, R683. Depoped R623.	X01
118	20	LVDS	08/24/2005	Dell	TeamTrack: Item Id: DF06789 Title: BIA_PWM for UMA need to add AND GATE	Added U49, C705, C706.	X01
119	22	ICH7M	08/24/2005	Dell	TeamTrack: Item Id: CR05951 Title: Move C535 to other side of R584	Moved C535.	X01
120	23	ICH7M	08/24/2005	Dell	TeamTrack: Item Id: CR05955 Title: Depop pull-up on SIO_THRM#	Depoped R598.	X01

DELL CONFIDENTIAL/PROPRIETARY

PROPRIETARY NOTE: THIS SHEET OF ENGINEERING DRAWING AND SPECIFICATIONS CONTAINS CONFIDENTIAL TRADE SECRET AND OTHER PROPRIETARY INFORMATION OF DELL INC. ("DELL") THIS DOCUMENT MAY NOT BE TRANSFERRED OR COPIED WITHOUT THE EXPRESS WRITTEN AUTHORIZATION OF DELL. IN ADDITION, NEITHER THIS SHEET NOR THE INFORMATION IT CONTAINS WAY BE USED BY OR DISCLOSED TO ANY THIRD PARTY WITHOUT DELL'S EXPRESS WRITTEN CONSENT.

Version Change List (P. I. R. List)

Item	Page#	Title	Date	Request Owner	Issue Description	Solution Description	Rev.
121	23/30/34	ICH7M/PCIe	08/24/2005	Dell	BITS CR05959: Rename PCI-E nets	Renamed PCI-E Nets.	X01
122	22/25	ICH7M/SATA	08/24/2005	Dell	BITS CR05950: Rename SATA Rx / Tx lanes	Renamed SATA Rx/Tx Nets.	X01
123	13	GMCH	08/26/2005	Dell	TeamTrack: BITS Item Id: CR06800 Title: Calistoga Filter Issues page 13	Added C707, C708. Deleted R665, R679, R671, R675.	X01
124	13	GMCH	08/26/2005	Dell	It is part of the Intel Filter ckt, for now you could place 0 ohm 805 package. The key is to reserve a placement for this component, in case you got an issue with your platform that related to this power rail noise. "	Changed Value of R751, R752 to 0 ohm.	X01
125	13	GMCH	08/26/2005	Dell	Updated the schematic notes for the MS-Duo Adapter Countermeasure Circuit.		X01
126	4	Power Rails	08/26/2005	Compal	Added +2.5V_RUN Rail Diagram		X01
127	7	CPU	08/26/2005	Dell	Per Intel DG rev 1.0 and M07 Ref Schematic.	Chnage R714 to 1K, R723 to 51ohm.	X01
128	39	Touch Pad	08/26/2005	Compal	For TP cable is compatible with Sullivan.	Swapped JTP pin1 and pin2.	X01
129	12	Calistoga	08/29/2005	Dell	PANEL_BKEN has twice pull down.	Removed R631.	X01
130	5	SMBus Topology	08/29/2005	Compal	Update SMBus Diagram.		X01
131	37/38	ECE5018 EMC5004	08/29/2005	Dell	Media direct button don't power on the system for Suva.	Add R754 for Zanzibar/ZUMA/Rikers only and R753 for Suva only.	X01
132	1	Cover page	08/29/2005	Dell	Add 6@ for Suva used only and 7@ for Zanzibar/ZUMA/Rikers used only.		X01
133	20	SPDIF	08/30/2005	Dell	Remove the transformer for SPDIF ckt.	Removed L29.	X01
134	20	CRT	08/30/2005	Dell	Added 39 ohm series resistors at HSYNC and VSYNC after the Buffer.	Added R755 and R756.	X01
135	20/43	TV_OUT	08/30/2005	Dell	Modified TV OUT filters for resolution support.	Added C709~C711 no stuff. C414,C417,C422,C413,C416,C421 pop 47P for discrete and 82P for UMA.	X01
136	16	Guardian II	08/31/2005	Dell	BITS CR20056: This is to address a D05 acoustic noise issue on the 5V Run rail.	Populated C410.	X01
137	30	LOM	08/31/2005	Dell	BITS CR20058: The comms teams recommedns that R507 and R522 be de-populated for all configurations.	Depopulated R507, R522.	X01
138	30	LOM	08/31/2005	Dell	BITS CR07184 and CR07190 Include support for ST-Micro Flash M45PE20 for the 5752 LOM	Added U50 and depop U24, R505. Added R757 nopop and pop R407, R509 for Rikers/Suva.	X01
139	34/38	MINI card EMC5004	09/02/2005	Dell	Debug Signals Routed to WLAN mCard connector.	Route HOST_DEBUG_TX/HOST_DEBUG_TX/8051TX/8051RX/ to JMINI pin16/17/19/42.	X01
140	12/20	Calistoga LVDS CONN	09/02/2005	Dell	Updated backlight control circuit.	Moved U49 and C705 to page 12. Pop R152 for UMA only.	X01
141	16	Guardian II	09/02/2005	Dell	Resistors package change for temperature/voltage margining test.	Change R737 and R703 from 0402 to 0603.	X01
142	39	LED	09/02/2005	Dell	BITS: CR03757 Updated bluetooth control circuit.	Added Q109.	X01
143	33	R5C832	09/05/2005	Dell	BITS DF20288: CoE5 Design review feedback from Arin Lin.	Change R487 value from 10K to 100K.	X01
144	30/43	LOM	09/05/2005	Dell	BITS CR20884:Based on IEEE testing, need to update RDAC value. This is ONLY for Zanzibar/Zuma using 4401E LOM.	Change R515 value from 1.27K 1% ohm to 1.24K 1% ohm. This change is for Zanzibar/ZUMA 4401E LOM only.	X01

DELL CONFIDENTIAL/PROPRIETARY

PROPRIETARY NOTE: THIS SHEET OF ENGINEERING DRAWING AND SPECIFICATIONS CONTAINS CONFIDENTIAL TRADE SECRET AND OTHER PROPRIETARY INFORMATION OF DELL INC. ("DELL") THIS DOCUMENT MAY NOT BE TRANSFERRED OR COPIED WITHOUT THE EXPRESS WRITTEN AUTHORIZATION OF DELL. IN ADDITION, NEITHER THIS SHEET NOR THE INFORMATION IT CONTAINS WAY BE USED BY OR DISCLOSED TO ANY THIRD PARTY WITHOUT DELL'S EXPRESS WRITTEN CONSENT.

Version Change List (P. I. R. List)

Item	Page#	Title	Date	Request Owner	Issue Description	Solution Description	Rev.
145	6/30/33	CLOCK/LOM /R5C832	09/06/2005	Compal	Crystal circuit evaluation.	Change C313,C314 value to 22pF and R199,R486 value to 220 ohm. R410 pop 750 ohm for 4401E, 470 ohm for 5752.	X01
146	5/38	SMBUS	09/07/2005	Compal	Fine tune SMBus pull-up resistors value.	Change R177/R182/R216/R217/R592/R599 value to 2.2K.	X01
147	43	Config.table	09/09/2005	Compal	4401E don't support TPM function.	Nopop R612 on ZUMA and Zanzibar.	X01
148	20/43	TV_OUT/CRT	09/13/2005	Dell	TV out filter circuit and termination changes for graphics.	Change R497,R503,R504,R17,R22,R26 value to 150 ohm. Change R755 and R756 from 39 ohm to 33 ohm.	X01
149	40	Power control	09/16/2005	Dell	Poplated +1.8V_SUS clamp circuit.	Pop R47 and Q106.	X01
150	37	ECE5018	09/23/2005	Dell	Board ID change.	Pop R221, depop R212.	X02
151	3/23/ 28/36	USB	09/29/2005	Dell	Added 0 ohm pop option for BT port	Useing ICH7-M port 7 for BT on Zanzibar/ZUMA. Added R758~R765.	X02
152	3/23/ 34/37	USB	10/11/2005	Dell	Added 0 ohm pop option for express card.	Useing ICH7-M port 0 for express card on Zanzibar/ZUMA. Added R766~R773.	X02
153	38	EMC5004	10/14/2005	Compal	Dip switch and JDEBG1connector are for development debug only, will remove for MP.	Remove SW1, R551, R552 and depop R555. Depop JDEBG1.	X02
154	37	ECE5018	10/14/2005	Compal	We can read system debug code from JDEBG2, so depop serial port inverter for cost saving.	Depop U41.	X02
155	39/41	Rikers LED	10/15/2005	Compal	Backlite Keyboard will not be supported and TP will only support single color LED on Rikers.	Remove page 42 and update intersheet references.	X02
156	38	EMC5004	10/15/2005	Dell	BITS item ID: CR29479 The MEC5004 boot block needs to be write protected.	Pop R600 and depop R601.	X02
157	20	CRT	10/15/2005	Dell	BITS item ID CR29469 : Per the VESA requitrement,change the VCC CRT diode to RB500 rated at Io = 100 mA Max.	Change D17 to RB500.	X02
158	40	Power sequence	10/15/2005	Dell	BITS item ID: CR29440 These are causing backdrive issue.	Deopulated R302, R307, Q54, Q53, R306, R301, Q56,Q57.	X02
159	13	Calistoga	10/15/2005	Dell	BITS item ID: CR29472 R751,R752 are not needed, replace these resistors by copper	Remove R751, R752.	X02
160	33	R5C832	10/15/2005	Dell	BITS item ID: DF20275 Follow Ricoh and M07 ref. schematic.	Remove R483.	X02
161	13	Calistoga	10/15/2005	Dell	Follow COE ref. sch. 945PM_GM_PM_M07_A04	Added notes for 3GPLL and 1.5V PCI-E power rails.	X02
162	34	Minicard	10/15/2005	Dell	Follow COE ref. sch. M07_minicard_A06 to remove resistors on COEX1_BT_ACTIVE and COEX2_WLAN_ACTIVE.	Removed R409 and R411.	X02
163	23	ICH7-M	10/15/2005	Dell	Follow COE ref. sch. ICH7_A06.	Moved LAMP_STAT# pull up resistor from +3.3V_SUS to +3.3V_RUN and pop R554.	X02
164	30	LOM	10/15/2005	Compal	Per broadcom ref. schematic.	Change Q59 from BCP69 to MBT352000MT1G.	X02
165	38	EMC5004	10/17/2005	Dell	Added a work around proposed by SMSC for the flash corruption issue.	Added D23,Q110,Q111,C712,R774~R778.	X02
166	37/38	EMC5004 ECE5018	10/18/2005	Dell	Added pull up resistors to +RTC_CELL on INSTANT_ON_R1# and INSTANT_ON_R2# for Rikers/Suva.	Added R779, R781.	X02
167	37	ECE5018	10/18/2005	Dell	Fixed a potential backdrive issue on the WLAN_RADIO_DIS# signal when we start doing Wake on WLAN.	Added D24 and R780 depoplated.	X02
168	38	EMC5004	10/18/2005	Dell	SMSC work around proposed for the flash corruption issue.	Added R782 connected TEST_PIN to GND.Change C219 value to 22uF and 0805 package for REV C parts.	X02
169	32	LAN Transfomer	10/19/2005	Dell	BITS DF06679:IEEE Return loss failures on Gig and 100 with Transpower DDOCK,these changes are just for Rikers/Suva only	Change R359,R360,R364,R366,R371,R374,R375,R382 to 48.7_1% ohm and L16~L20,L23~L25 to 36nH for Rikers/Suva only.	X02

DELL CONFIDENTIAL/PROPRIETARY

PROPRIETARY NOTE: THIS SHEET OF ENGINEERING DRAWING AND SPECIFICATIONS CONTAINS CONFIDENTIAL TRADE SECRET AND OTHER PROPRIETARY INFORMATION OF DELL INC. ("DELL") THIS DOCUMENT MAY NOT BE TRANSFERRED OR COPIED WITHOUT THE EXPRESS WRITTEN AUTHORIZATION OF DELL. IN ADDITION, NEITHER THIS SHEET NOR THE INFORMATION IT CONTAINS WAY BE USED BY OR DISCLOSED TO ANY THIRD PARTY WITHOUT DELL'S EXPRESS WRITTEN CONSENT.

Version Change List (P. I. R. List)

Item	Page#	Title	Date	Request Owner	Issue Description	Solution Description	Rev.
170	40	Power sequence	10/19/2005	Dell	5V_3V_RUN_PWRGD ckt values update to minimize the leakage current.	Change R302/R307 to 200K ohm, R301/R306 to 4.7K ohm.	X02
171	23	ICH	10/20/2005	Dell	Added 0.1uF cap as a short-term solution for IMVP_PWRGD glitch issue.	Added C713.	X02
172	19	DVI	10/20/2005	Dell	Reserved a 0805 pad for DVI safety issue.	Added R783.	X02
173	20	CRT	10/21/2005	Dell	Poplated CRT HSYNC and VSYNC buffer on discrete mode.	Change pop options on U4,U5,C653,C656,R41,R42,R38, R755,R756,R713,R707.	X02
174	3/23/ 28/34	USB	10/24/2005	Dell	Using the same USB mapping for Zuma,Zanzibar,Riker,and Suva	Update USB pop options.	X02
175	16	Thermal	10/26/2005	Dell	Follow COE M07_GUARDIANII_X05 ref. schematic.	Change R489,R490 to 120K and R488 to 78.7K 1%. Change C400,C694 to 22U and C412 to 0.22U.	X02
176	16	Thermal	10/28/2005	Dell	BITS item ID: CR20057 Change layout note for VCP thermistors	Updated Note.	X02
177	33	5-in1	10/28/2005	Dell	BITS item ID: DF20280 Layout for pins FIL0/REXT/VREF -- the ref designators need to be updated	Updated Note.	X02
178	27	Amplifier	11/01/2005	Dell	Set gain of TPA60017A2 to 21.6dB	Populate R449 and depop R453.	X02
179	28	Subwoofer	11/01/2005	Dell	Set gain of MAX9713 to 22 dB.	Populate R693 and depop R698.	X02
180	27/28	AUDIO	11/01/2005	Dell	Audio filter fine tune.	Change R685 to 0 ohm and C369, C343 from 0.015uF to 0.012uF. Depop C632 and change C383,C384 to 1U_10V_X5R. Change C620 from 0.056uF to 0.033uF.	X02
181	38	EMC5004	11/11/2005	Dell	Depop SMSC work around proposed on EMC5004 revision D chip	Depop R774~R778, C712, Q110, Q111 and D23. Change C219 from 22uF to 4.7uF	X02
182	37	ECE5018	11/12/2005	Dell	Board ID change to A00.	Depop R221, R220, R210. Pop R211, R212, R219.	A00
183	19	DVI	11/12/2005	Dell	To fix the overloading test failed issue on DVI port.	Change 0 ohm(R783) to RB500V(D25).	A00
184	23	ICH	11/12/2005	Dell	Follow COE ref. schematic ICH7_A07. HDDC_EN# and MODC_EN# floats at initial power up.	Added R783 and R784.	A00
185	40	POWER SEQUENCE	11/12/2005	Dell	Follow COE ref. schematic system power sequence_A05. Added +3.3V_RUN delay RC CKT to fix IMVP_PWRGD glitch issue Added diode bleed off for +3.3V_RUN GFX power down sequence adjustment.	Added R785 and D26. Change C81 from 0.01U to 4700P and C85 from 0.022U to 470P.	A00
186	40	POWER SEQUENCE	11/12/2005	Compal	Added clamp ckt for +5V_RUN.	Added R786 and Q112 but no stuff.	A00
187	16	Thermal	11/22/2005	Dell	BITS item ID: CR20057 Change layout note for VCP thermistors	Updated Note.	A00
188	23	ICH	11/22/2005	Dell	BITS item ID: CR05952 Change schematic notes on page 23.	Updated Note.	A00
189	26/27	AUDIO	11/22/2005	Dell	M07 cap change recommendations for audio.	Change C390,C395,C396,C362,C381,C382,C379 from Y5V to X5R and C363,C374,C380 from Y5V to X7R.	A00
190	39	LED	11/22/2005	Dell	Follow COE ref. schematic bluetooth_A06.	Change Q30 from PMBT3904 to BSS138.	A00
191	23/28/34	USB	11/24/2005	Dell	Since BIOS can fix bluetooth and express card issue on ST build. Remove 0 ohm pop options resistors for cost saving.	Remove R758~R773.	A00
192	28	Subwoofer	11/24/2005	Dell	Improveing the "BO, BO" sound in DOS after system post.	Change C69 value from 0.22uF to 0.47uF.	A00

DELL CONFIDENTIAL/PROPRIETARY

PROPRIETARY NOTE: THIS SHEET OF ENGINEERING DRAWING AND SPECIFICATIONS CONTAINS CONFIDENTIAL TRADE SECRET AND OTHER PROPRIETARY INFORMATION OF DELL INC. ("DELL") THIS DOCUMENT MAY NOT BE TRANSFERRED OR COPIED WITHOUT THE EXPRESS WRITTEN AUTHORIZATION OF DELL. IN ADDITION, NEITHER THIS SHEET NOR THE INFORMATION IT CONTAINS WAY BE USED BY OR DISCLOSED TO ANY THIRD PARTY WITHOUT DELL'S EXPRESS WRITTEN CONSENT.

Version Change List (P. I. R. List)

Item	Page#	Title	Date	Request Owner	Issue Description	Solution Description	Rev.
193	23	ICH	12/01/2005	Dell	To fix HDD parking sound issue when system warm boot.	R783 and R784 no stuff.	A00
194	33	R5C832-1394	12/01/2005	Dell	Since the AAT4250 doesn't provide current limited capablility.	Change U29 from AAT4250IGV-T1 to G5240B1T1U.	A00
195	39	LED	12/02/2005	Dell	Per Bo's requirement, keep original circuit that the same as ST build.	Change Q30 from BSS138 to PMBT3904.	A00
196	20	CRT	12/05/2005	Dell	H&V SYNC rise/fall times improvement.	Change R755 and R756 value from 33 ohm to 0 ohm.	A00
197	9	CPU Bypass	12/05/2005	Dell	These changes improved buzzing noise.	Change Vcore MLCC CAPs from 22uf *32pcs to 10uf * 32pcs; change output SP caps from 330u/ 7mohms * 6pcs to 330u/ 6mohms *4pcs.	A00
198	33	R5C832-1394	12/13/2005	Dell	The curent switch G5240B1T1U is not on Dell PSL.	Change G5240B1T1U U29 go back to AAT4250IGV-T1.	A00
199	37	ECE5018	12/02/2005	Dell	Board ID change.	Pop R221 and depop R212.	A01

PROPRIETARY NOTE: THIS SHEET OF ENGINEERING DRAWING AND SPECIFICATIONS CONTAINS CONFIDENTIAL TRADE SECRET AND OTHER PROPRIETARY INFORMATION OF DELL INC. ("DELL") THIS DOCUMENT MAY NOT BE TRANSFERRED OR COPIED WITHOUT THE EXPRESS WRITTEN AUTHORIZATION OF DELL. IN ADDITION, NEITHER THIS SHEET NOR THE INFORMATION IT CONTAINS WAY BE USED BY OR DISCLOSED TO ANY THIRD PARTY WITHOUT DELL'S EXPRESS WRITTEN CONSENT.

Version Change List (P. I. R. List) for Power Circuit

Item	Page#	Title	Date	Request Owner	Issue Description	Solution Description	Rev.
1	P50	Charger	06/20/2005	Compal	Schematic issue on Charger: The RC filiter should be connected on Charger LX Pin, not L-S gate Pin.	Change PR165 from 1 ohm to 0 ohm No POP PC158 200pF.	M00
2	P50	Charger	06/20/2005	Compal	Add 1 ohm_0402, 200pf RC filter to Charger LX pin as shown in attached schematic.	PR165 1 ohm_0805 PC158 200pF_0603.	X00
3	P46 P47 P48	+3.3V/+5V/+15V +1.5VRUNP /+VCCP_1P05VP +1.8VSUSP/ +0.9V_DDR_VT	06/22/2005	Compal	Voltage margining test.	Reserve PR175, PR176, PR177, PR178 and PR79 for voltage margining test.	X00
4	P44	+DCIN	07/04/2005	Dell	Under power Adapter disable.	Add PQ35, PQ26 and PR180 (No pop).	X00
5	P50	Charger	07/04/2005	Dell	Need capability for controlling the Adapter input.	Add PQ38 (No pop).	X00
6	P46	+3.3V/+5V/+15V	07/06/2005	Dell	Return to original due to SMSC EC issue already be fixed.	Add PQ39, PU16, PC171 and PR181 (No POP) Delete PR162, PC157, PU14 and PR164.	X00
7	P44 P45 P50	+DCIN Battery Conn Charger	07/06/2005	Dell	Rename pull high net from +3.3V_SRC to +3.3V_ALW.	PR1-Pin2, PR11-P IN1, Battery ESD diode, PC30-Pin1 and PR168-Pin1.	X00
8	P49	+VCC_CORE	07/06/2005	Dell	Follow Coe ref sch: change to A02.	Change PR77-Pin2 net from +PWR_SRC to +CPU_PWR_SRC Change PR87 from 150k to 147k.	X00
9	P49	+VCC_CORE	07/06/2005	Dell	Follow Coe ref sch: change to A03.	Change PR100 from 0 to 499 for Intel require Add PR182, No POP PR102 for POP option for PU5-Pin15 PG. Change net name from PGD_IN to 1.05V_RUN_PWRGD No Pop PH1 and PR88 Change RC phase node to C snubber, delete PR80, PR98 and PR118 Change PC93, PC103 and PC120 from 0.01u to 1500pF.	X00
10	P48	+1.8VSUSP/ +0.9V_DDR_VT	07/06/2005	Dell	Follow Coe ref sch: change to A02	Change net name from +0.9V_PWRGD to 0.9V_DDR_PWRGD.	X00
11	P47	+1.5VRUNP /+VCCP_1P05VP	07/06/2005	Dell	Follow Coe ref sch: change to A02 Need independent PGs and update Layout notes.	Change PG name from PGD_IN to 1.05V_RUN_PWRGD Use 1.5V PG: Add PR183 for 1.5V_RUN_PWRGD Update Layout notes.	X00
12	P48	+1.8VSUSP/ +0.9V_DDR_VT	07/13/2005	Compal	Change 0.9V input power to 1.8VSUS.	Install PJP21 for 0.9V input power.	X00
13	P46	+3.3V/+5V/+15V	07/20/2005	Dell	ILIM5 set point is too high for 6.5A OCP.	Change PR25 to 69.8K.	X00
14	P46	+3.3V/+5V/+15V	07/20/2005	Dell	ILIM3 set point is too high for 6.9A OCP.	Change PR26 to 82.5K.	X00
15	P50	Charger	07/20/2005	Dell	It is recommended to connect the ground pins of the following analog components with a separate analog ground:	PR22, PC16, PC29, PR23, PR34, PR35, PU2_pin23. Add PR184 Short this analog ground with the power ground plane at PU2_pin23.	X00
16	P48	+1.8VSUSP/ +0.9V_DDR_VT	07/20/2005	Dell	Update 1.8V output notes	Modified 1.8V: Min OCP=12.7A, not design current.	X00
17	P48	+1.8VSUSP/ +0.9V_DDR_VT	07/20/2005	Dell	PC69 need change to 0603 size.	Change PC69 to 0.1uF_25V_0603 from 0.1uF_50V_0805.	X00
18	P50	Charger	07/20/2005	Dell	Two 10uF 1210 caps are recommended for input ripple current at the 6.2A charge rate will be over 3A.	Change PC127 and PC128 to 1210 from 1206 size.	X00
19	P49	+VCC_CORE	07/20/2005	Dell	Recommend using X6S filtering capacitors for VCORE decoupling Follow Team track (BITS): no: CR03709	Change PC87, PC88, PC97, PC98, PC109 and PC110 to X6S from X5R.	X00
20	P49	+VCC_CORE	07/20/2005	Dell	to match latest VCore reference schematic A03.	Depop PR104 and add PR185 resistor to jumper pin 2 to pin 38	X00

PROPRIETARY NOTE: THIS SHEET OF ENGINEERING DRAWING AND SPECIFICATIONS CONTAINS CONFIDENTIAL TRADE SECRET AND OTHER PROPRIETARY INFORMATION OF DELL INC. ("DELL") THIS DOCUMENT MAY NOT BE TRANSFERRED OR COPIED WITHOUT THE EXPRESS WRITTEN AUTHORIZATION OF DELL. IN ADDITION, NEITHER THIS SHEET NOR THE INFORMATION IT CONTAINS WAY BE USED BY OR DISCLOSED TO ANY THIRD PARTY WITHOUT DELL'S EXPRESS WRITTEN CONSENT.

Version Change List (P. I. R. List) for Power Circuit

Item	Page#	Title	Date	Request Owner	Issue Description	Solution Description	Rev.
21	P49	+VCC_CORE	07/20/2005	Dell	Change net name from H_PROCHOT# to IMVP6_PROCHOT#	Change net name from H_PROCHOT# to IMVP6_PROCHOT# on PR86 Pin2.	X00
22	P50	Charger	07/20/2005	Compal	Improve current sense accuracy	Update PR123 and PR138 Symbol Pin define for layout dimension pin define changed.	X00
23	P49	+VCC_CORE	07/20/2005	Compal	Improve Inductor DCR sense accuracy	Update PL15, PL16 and PL17 Symbol Pin define for layout dimension pin define changed.	X00
24	P50	Charger	07/21/2005	Compal	Set power limit to 130W/ 90W for ZRS.	Change PR169 to 28.7K from 200K. Add Pop Option notes. For Z/ ZUMA pop PR169: 28K, depop PR186 For R/ S pop PR186: 100K, depop PR169.	X00
25	P50	Charger	07/22/2005	Compal	Follow COE charger A02 ref. schematic.	Connected PC131 pin2 to PR165 pin2.	X00
26	P49	+VCC_CORE	08/22/2005	Compal	Cost Down:Change CPU L-S MOSFET from BSC022N03S to FDS7088SN3.	Change PQ17, PQ19 and PQ21 to FDS7088SN3.	X01
27	P49	+VCC_CORE	08/22/2005	Dell	BITS ID: CR04364. Change ISL6260 VSUM resistors to 0805 package to reduce offset error; and DROOP reisstor value	Change PR83, PR103 and PR122 to 0805 size from 0402. Chang loadline slope resistor PR119 from 9.53k to 10.5k	X01
28	P47	+1.5VRUNP /+VCCP_1P05VP	08/22/2005	Dell	Follow Coe ref sch: change to A03.	Change PL10 to 3.2UH_CDEP12D38NP_8.5A from 3.8UH_SIL104-3R8_6A. Change PR47 to 1.87K from 2.1K.	X01
29	P48	+1.8VSUSP/ +0.9V_DDR_VT	08/22/2005	Dell	Follow Coe ref sch: change to A03.	Delete PJP21 and PJP22 Jumper. VTTI only need 1.8V, no 1.5V.	X01
30	P50	Charger	08/23/2005	Dell	Follow COE charger A03 ref. schematic.	Change PR169 to 301k, PR170 to 0, PR171 to 59k, PR172 to 33.2k. Delete PR186, PC166, PC167 and PU15; depop PR166.	X01
31	P48	+1.8VSUSP/ +0.9V_DDR_VT	08/26/2005	Dell	To fix the 1.8VSUS bleed off issue at Power Down	2 of 0ohm resitors (PR186 and PR187) at PU6 pin 22 (VDD) to either 5VSUS and 5VALW.	X01
32	P46	+3.3V/+5V/+15V	08/26/2005	Compal	To fix the PC36 AL-Caps can not meet lead free reflow spec isse.	Add PC172 and change PC36 from C_25CV220AX to NIPPON, MVY25VC100MF80 due to SANYO AL Cap can not meet lead free reflow spec	X01
33	P49	+VCC_CORE	08/29/2005	Compal	To fix the PC150 AL-Caps can not meet lead free reflow spec isse.	Reserve PC173 (100U) and double footprint with PC150 (220U) Pop PC173 if needed for buzz noise, Reserve PC150 for SANYO Vendor ready AL-Caps reflow spec. and it is enough capacity (220U) to against buzz noise.	X01
34	P48	+1.8VSUSP/ +0.9V_DDR_VT	08/30/2005	Dell	BITS issue: CR20063: This is not on the reference schematic and is not asked for by Maxim.	Delete PC74.	X01
35	P49	+VCC_CORE	08/30/2005	Dell	BITS issue: CR07318: Intersil X01 ZRS Schematic Review - Vcore	Set PC100=0.015uF (decrease soft-start time) Set PR108=11.5K (set OCP=55A)	X01
36	P50	Charger	08/30/2005	Dell	BITS issue: DF20383 : Maxim ZRS X01 MAX8731 Schematic Review	Nopop PC158, set PR165=0.	X01
37	P47	+1.5VRUNP /+VCCP_1P05VP	08/31/2005	Dell	BITS issue: CR20060 : Power Good Pull Up Removed	De-populate PR183 and PR60	X01
38	P50	Charger	08/31/2005	Dell	Reserve INA194 as a Buck up.	No POP PU17, PC174, PC175 and PR188.	X01

DELL CONFIDENTIAL/PROPRIETARY

PROPRIETARY NOTE: THIS SHEET OF ENGINEERING DRAWING AND SPECIFICATIONS CONTAINS CONFIDENTIAL TRADE SECRET AND OTHER PROPRIETARY INFORMATION OF DELL INC. ("DELL") THIS DOCUMENT MAY NOT BE TRANSFERRED OR COPIED WITHOUT THE EXPRESS WRITTEN AUTHORIZATION OF DELL. IN ADDITION, NEITHER THIS SHEET NOR THE INFORMATION IT CONTAINS WAY BE USED BY OR DISCLOSED TO ANY THIRD PARTY WITHOUT DELL'S EXPRESS WRITTEN CONSENT.

Version Change List (P. I. R. List) for Power Circuit

Item	Page#	Title	Date	Request Owner	Issue Description	Solution Description	Rev.
39	P50	Charger	09/16/2005	Dell	Update ADAPT_OC, add note.	Change PR169: 28K for R/S, 100K for Z/ZUMA Change PR171 to 121K; Change PR172 to 3.01K	X01
40	P50	Charger	09/26/2005	Compal	Change filter for derating is not enough.	1. Change PL2, PL21, PL3, PL4, PL18 and PL19 from 453215-900LMAT 1812_6A to 1812_9A; 2. Pop PL3 and PL18.	X02
41	P50	Charger	09/29/2005	Dell	Adapter OC setting update.	Pop Option notes: 1. 4@. For Zanzibar/ ZUMA pop PR169, PR172 for 90W, no pop PR189, PR190. 2. 5@. For Ricker/ Suva pop PR189, PR190 for 130W, no pop PR169, PR172. 3. PC160 no pop.	X02
42	P50	Charger	10/05/2005	Dell	dV/dt issue with the FBSA pin of Charger, recommend an RC filter at the pin.	Add PR191 and PC176 filter Add PR192 (No pop)	X02
43	P48	+1.8VSUSP/ +0.9V_DDR_VT	10/11/2005	Dell	Modified BST resistor to protection BOOT diode. Depop 0.9V pull high.	Change PR67 from 0 to 1. Depop PR66.	X02
44	P49	+VCC_CORE	10/14/2005	Dell	Follow Coe schematic	Change PC100 from 0.015u to 0.01uF.	X02
45	P49	+VCC_CORE	10/14/2005	Dell	Improve the temperature compensation of output voltage regulation	Change PR111 from 3.57K to 2.43K	X02
46	P49	+VCC_CORE	10/14/2005	Dell	Improve the time constant match between L/DCR and droop circuit R*C	Change PC113 from 0.01uF_NC to 0.033uF	X02
47	P49	+VCC_CORE	10/14/2005	Dell	Follow Coe schematic	PR182 Pin 1 change from H_DPRSTP# to A_GND	X02
48	P50	Charger	10/17/2005	Dell	Follow Coe schematic	Pop PR192 , No pop PR191 Connect FBSA and FBSB (pins 15 and 16) together	X02
49	P47 P46	+1.5VRUNP /+VCCP_1P05VP +3.3V/+5V/+15V	10/17/2005	Dell	Change input MLCC cap.	Pop PC145 , No pop PC47.	X02
50	P48	+VCC_CORE	10/18/2005	Dell	Change CPU L-S Layout dimension Use combination footprint	Layout dimension from FDS7088SN3_SO8 to FDS7088SN3_SO8_3P	X02
51	P46 P48	+3.3V/+5V/+15V +1.8VSUSP/ +0.9V_DDR_VT	10/25/2005	Dell	Update 3V, 5V and 1.8V OC to meet power Budgets	Change PR76 from 48.7k to 36.5k Change PR26 from 82.5k to 71.5k Change PR25 from 69.8k to 19.1k	X02
52	P50	Charger	10/26/2005	Compal	Add 1 ohm, 200pf RC filter to Charger LX pin same as Travis.	Change PR165 from 0 to 1, Pop PC158 220pF.	X02
53	P50	Charger	10/27/2005	Dell	Adapter OC UL circuit update	1. change PR169 from 4@301k to 4@49.9k 2. change PR172 from 4@71.5k to 4@9.31k 3. change PR171 from 68.1k to 13.3k 4. change PR189 from 5@215k to 5@33.2k 5. change PR190 from 5@121k to 5@15k 6. change PR166 from @499k to 976k	X02
54	P47	+1.8VSUSP/ +0.9V_DDR_VT	11/11/2005	Dell	Follow Coe A05 schematic	Delete PR68 0 ohms on pin7 drived by RUN_ON.	A00
55	P49	Charger	11/11/2005	Dell	Change Charger input caps size due to material EOL.	Change PC127 and PC128 from 1210 to 1206.	A00

PROPRIETARY NOTE: THIS SHEET OF ENGINEERING DRAWING AND SPECIFICATIONS CONTAINS CONFIDENTIAL TRADE SECRET AND OTHER PROPRIETARY INFORMATION OF DELL INC. ("DELL") THIS DOCUMENT MAY NOT BE TRANSFERRED OR COPIED WITHOUT THE EXPRESS WRITTEN AUTHORIZATION OF DELL. IN ADDITION, NEITHER THIS SHEET NOR THE INFORMATION IT CONTAINS WAY BE USED BY OR DISCLOSED TO ANY THIRD PARTY WITHOUT DELL'S EXPRESS WRITTEN CONSENT.

Version Change List (P. I. R. List) for Power Circuit

Item	Page#	Title	Date	Request Owner	Issue Description	Solution Description	Rev.
56	P49	Charger	11/21/2005	Dell	Follow Coe A09 schematic	No pop PC176, Add PC177 pop	A00
57	All	All 1812 size bead	11/23/2005	Compal	Use co-dimension bead for shortage issue	Change to new dimension: PL2, PL21, PL3, PL4, PL5, PL9, PL12, PL14, PL18 and PL19	A00
58	P49	Charger	11/24/2005	Dell	ADAPT_OC Circuit update.	Keep use for Ricker/ Suva #130W; Delete these circuit for Zanzibar/ ZUMA. Update notes on Page49.	A00
59	P49	+VCC_CORE	11/29/2005	Dell	V_CORE rusted issue	Change Inductor from NEC-TOKIN MPC1040LR45 to PANASONIC ETQP4LR45XFC	A00
60	P49	+VCC_CORE	11/29/2005	Compal	V_CORE Aduio buzzing noise	Pop PC150 220UF.	A00
61	P43	+DCIN	12/05/2005	Dell	PR9 should be 10K ohms to meet derating.	Change PR9 value from 4.7K to 10K.	A00
62	P49	Charger	12/1/2005	Dell	Deeply dischargered battery problem.	Add PR193, PD54.	A01

PROPRIETARY NOTE: THIS SHEET OF ENGINEERING DRAWING AND SPECIFICATIONS CONTAINS CONFIDENTIAL TRADE SECRET AND OTHER PROPRIETARY INFORMATION OF DELL INC. ("DELL") THIS DOCUMENT MAY NOT BE TRANSFERRED OR COPIED WITHOUT THE EXPRESS WRITTEN AUTHORIZATION OF DELL. IN ADDITION, NEITHER THIS SHEET NOR THE INFORMATION IT CONTAINS WAY BE USED BY OR DISCLOSED TO ANY THIRD PARTY WITHOUT DELL'S EXPRESS WRITTEN CONSENT.

www.s-manuals.com