OVERVIEW

BENEFITS AT A GLANCE

- Powerful 100- and 120-MHz Intel Pentium® processor with an integrated 16 KB cache
- Large 10.4-inch VGA or SVGA color STN or TFT display
- 32-bit PCI local bus video graphics with external support for resolutions up to 1024 x 768
- 8 MB or 16 MB EDO RAM standard, expandable to 24 MB or 48 MB respectively
- Two Type II/one Type III PC Card slot(s)
- Large 19-mm optical, built-in trackball
- Integrated 3.5-inch floppy drive
- Upgradable memory
- Full-size keyboard with tilt feature and palm rest
- Large 810-MB or 1-GB internal hard drive
- Status panel displays vital information such as remaining battery life and power status
- NiMH battery supports two-three hours of continuous use and recharges quickly[1]
- Compaq-unique power conservation features including user-initiated hibernation and Standby
- Protected by CompaqCare, including a one-year, worldwide limited warranty[2]
- Optional two-year additional warranty upgrade

[1] When unit is powered off.
[2] Certain restrictions and exclusions apply. Consult the Compaq Customer Support Center for details.

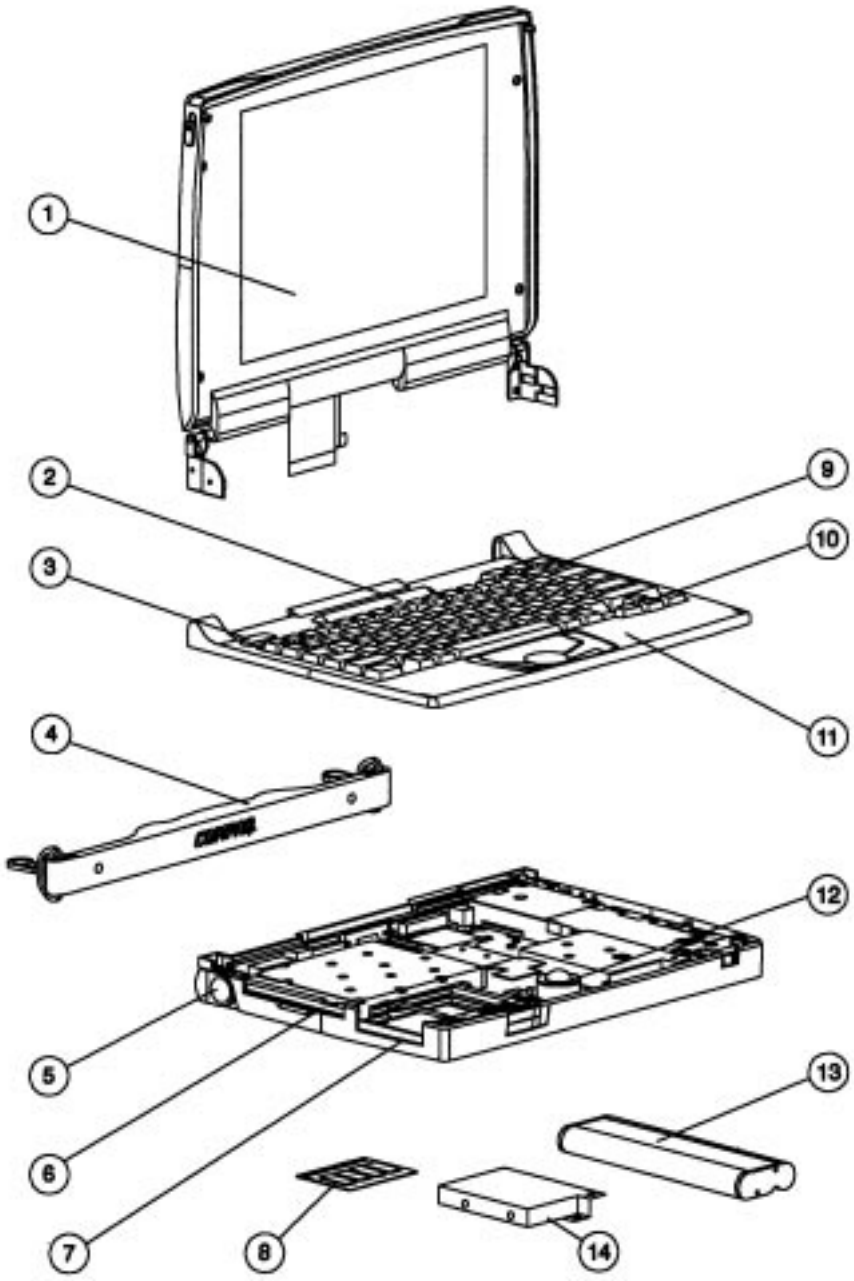

1. Color Display (CSTN or CTFT)
2. Status Panel
3. Power Button
4. Handle
5. Keyboard Tilt Feature
6. 3.5-Inch, 1.44-MB Floppy Drive
7. Two Type II/One Type III PC Card Slot(s)
8. Memory Expansion Board
9. Full-Sized Keyboard
10. Isolated, Inverted “T” Cursor Keys
11. Palm Rest
12. 19-mm Integrated Trackball
13. NiMH Battery
14. 810-MB or 1-GB Hard Drive

MODELS

Armada 1120
262450-003

Armada 1120T
262500-003

Armada 1130
273600-003

Armada 1130T
273650-001

STANDARD FEATURES

Size and Weight (HxWxD)
2.25 x 11.9 x 8.9 in/5.72 x 30.22 x 22.61 cm;
6.1 lb/2.75 kg

Processor and Cache
100- or 120-MHz Intel Pentium® processors with internal 16-KB cache

Display/Graphics
Armada 1120: 10.4-inch color STN VGA
Armada 1120T: 10.4-inch color TFT VGA
Armada 1130: 10.4-inch color STN SVGA
Armada 1130T: 10.4-inch color TFT SVGA
All include 32-bit PCI local bus video with 1 MB VRAM

Memory
Armada 1120 and 1120T: 8 MB of RAM standard expandable to 24 MB
Armada 1130 and 1130T: 16 MB RAM standard expandable to 48 MB

Hard Drives and Storage
Armada 1120 and 1120T: 810-MB Hard Drive
Armada 1130 and 1130T: 1-GB Hard Drive

Pointing Device
Integrated 19-mm center-mounted optical trackball

Interfaces
Keyboard/Pointing Device, Enhanced Parallel Port, Serial Port, External Monitor Port

Keyboard
Full size keyboard with 4° tilt with isolated, inverted "T" cursor keys, palm rest and separate cursor control keys

Diskette Drive
Internal 3.5-inch, 1.44-MB Diskette Drive

Security Features
Power-on Password, QuickLock, QuickBlank, Cable-lock provision, hard disk, diskette drive and PCMCIA disable

Typical Battery Life[1]
Two-three hours

Power Management
Standby with Instant-On; Fail Safe and User-Initiated Hibernation; power conservation: three pre-set and one custom level

PC Card Slots
Two Type II or One Type III industry-standard PC Card slot(s)

Preinstalled Software
Windows 95, MS Works, Astound CSE, Microsoft Internet Explorer, Netscape; also supports Windows 3.1, Windows NT, Windows for WorkGroups and OS/2

Service and Support
CompaqCare provides a wide range of service offerings including one-year[2], pickup/carry-in, worldwide limited warranty, on-site upgrade available for purchase; additional two-year limited warranty upgrade available; lifetime toll-free 7 x 24 hardware technical phone support for Compaq products, and RemotePaq allowing technical support engineers to remotely troubleshoot hardware and software configurations.

OPTIONS

Communications

SpeedPaq 336 Telephony Modem	266200-001
(wide assortment of cellular connection cables available including Motorola, Nokia and others)	
Compaq 336 Fax Modem	189650-002
Netelligent 56K PC Card Modem	295050-B21
10/100 TX PC Card UTP Controller	292812-B21
10 T PC Card UTP Controller	292806-B21
10 2 PC Card Coax Controller	292807-B21
10/100 TX PC Card UTP Controller Upgrade	292813-B21
Compaq Ethernet LAN Card	224750-001

For additional compatible PC Cards, view the Compaq PC Card Solution List on the Compaq Web site at http://www. compaq.com/product info/notebooks.

Memory

8-MB Memory Expansion Board	220581-001
16-MB Memory Expansion Board	220582-001
16-MB EDO Memory Expansion Board[3]	272109-001
32-MB EDO Memory Expansion Board[3]	220580-001

Power

Enhanced NiMH Battery Pack	190529-001
AC Adapter (with AC power cord)	147671-002
Automobile Adapter	217934-002

OPTIONS *(cont'd)*

Monitors

V50 Color	264150-001
V70 Color	255606-001
P50 Color	264200-001
P70 Color	255650-001
QVision 210 Color[4]	210406-601
TFT500 Flat Panel	285006-001

Input Devices

Compaq Trackball	143580-001
Compaq Mouse	143315-001

Other

Port Replicator, external CD-ROM, monitor stand and battery charger are available from X-Tend Corporation: please contact X-Tend at 1-800-419-8994 for more information.

Carrying Cases

Slipcase (10 pack)	147709-001

A full line of Compaq brand carrying cases are available through Targus/Fabrique. For information please contact Targus/Fabrique at 801-572-8908 or 714-523-5429

[1] Battery life will vary based on the configuration of the computer and the usage pattern of the individual user.
[2] Certain restrictions and exclusions apply. Consult the Compaq Customer Support Center for details.
[3] Supported on the Armada 1130 and 1130T only.
[4] Supports up to 1024 x 768 with 256 colors on the Armada 1100 Series.

FEATURES

	Compaq Armada 1120	Compaq Armada 1120T	Compaq Armada 1130	Compaq Armada 1130T
System Unit				
Microprocessor	Intel Pentium® 100-MHz	Intel Pentium 100-MHz	Intel Pentium 120-MHz	Intel Pentium 120-MHz
Cache	Integrated 16 KB	Integrated 16 KB	Integrated 16 KB	Integrated 16 KB
RAM				
Standard	8 MB	8 MB	16 MB	16 MB
Maximum	24 MB	24 MB	48 MB	48 MB
Advanced Power Management	Yes	Yes	Yes	Yes
Coprocessor	Yes	Yes	Yes	Yes
Display				
Type	10.4-inch color STN	10.4-inch color TFT	10.4-inch color STN	10.4-inch color TFT
Resolution	640 x 480	640 x 480	800 x 600 SVGA	800 x 600 SVGA
Extended Text	Yes	Yes	Yes	Yes
Graphics				
32-bit PCI Local Bus Video	Yes	Yes	Yes	Yes
1024 x 768 Maximum External Support	Yes	Yes	Yes	Yes
Storage				
Internal Diskette Drive	1.44-MB	1.44-MB	1.44-MB	1.44-MB
Hard Drive	810-MB	810-MB	1-GB	1-GB
Interfaces				
PC Card	Two Type II or One Type III slot(s)	Two Type II or One Type III slot(s)	Two Type II or One Type III slot(s)	Two Type II or One Type III slot(s)
Enhanced Parallel	Yes	Yes	Yes	Yes
Serial	Yes	Yes	Yes	Yes
External Keyboard/Pointing Device	Yes	Yes	Yes	Yes
External Monitor	Yes	Yes	Yes	Yes
External Storage	Yes	Yes	Yes	Yes
Pointing Device				
19-mm Integrated Optical Trackball	Yes	Yes	Yes	Yes
Monitors				
V50 Color	Optional	Optional	Optional	Optional
V70 Color	Optional	Optional	Optional	Optional
P50 Color	Optional	Optional	Optional	Optional
P70 Color	Optional	Optional	Optional	Optional
QVision 210 Color[1]	Optional	Optional	Optional	Optional
TFT500 Flat Panel	Optional	Optional	Optional	Optional

	Compaq Armada 1120	Compaq Armada 1120T	Compaq Armada 1130	Compaq Armada 1130T
Keyboard				
101/102-Key Compatible Keyboard (with tilt feature and separate cursor control keys)	Standard	Standard	Standard	Standard
Enhanced II Keyboard	Optional	Optional	Optional	Optional
Space Saver Keyboard	Optional	Optional	Optional	Optional
Supported Operating Systems and Software				
Preinstalled Software	Windows 95, MS Works, Astound CSE, MS Internet Explorer, Netscape	Windows 95, MS Works, Astound CSE, MS Internet Explorer, Netscape	Windows 95, MS Works, Astound CSE, MS Internet Explorer, Netscape	Windows 95, MS Works, Astound CSE, MS Internet Explorer, Netscape
Physical Specifications				
Dimensions (HxWxD)	2.25 x 11.9 x 8.0 in/5.72 x 30.22 x 22.61 cm	2.25 x 11.9 x 8.0 in/5.72 x 30.22 x 22.61 cm	2.25 x 11.9 x 8.0 in/5.72 x 30.22 x 22.61 cm	2.25 x 11.9 x 8.0 in/5.72 x 30.22 x 22.61 cm
Weight	6.1 lb/2.75 kg	6.1 lb/2.75 kg	6.1 lb/2.75 kg	6.1 lb/2.75 kg

[1]Supports up to 1024 x 768 with 256 colors on the Armada 1100 Series.

Compaq Armada 1120 and 1120T

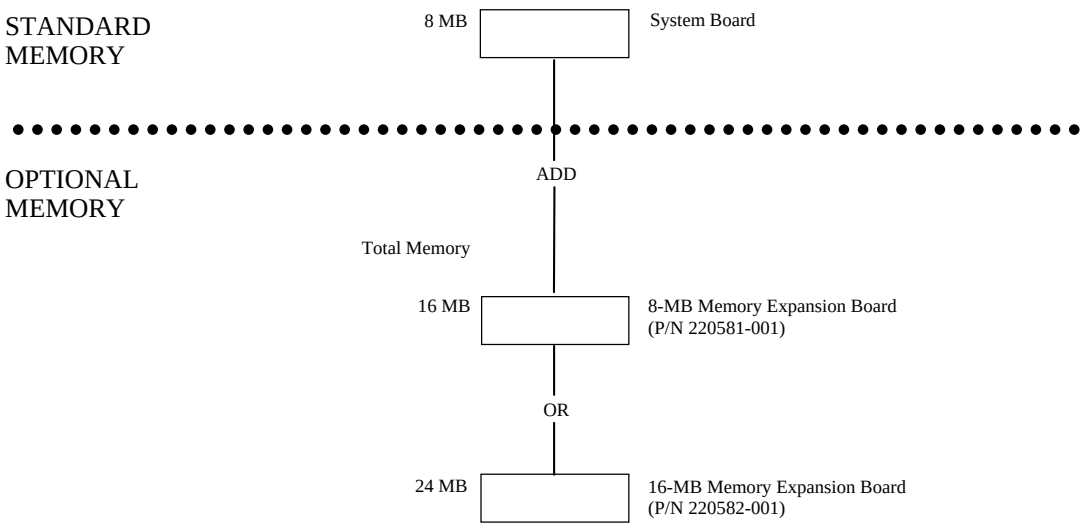

Following are the memory options available from Compaq:

- 8-MB Memory Expansion Board 220581-001
- 16-MB Memory Expansion Board 220582-001

Compaq Armada 1130 and 1130T

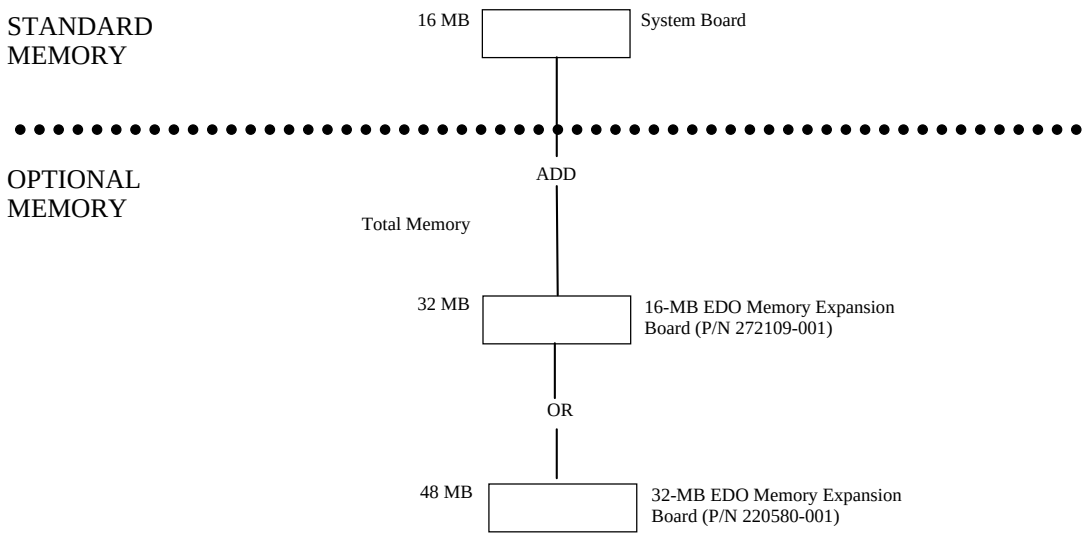

Following are the memory options available from Compaq:

- 16-MB EDO Memory Expansion Board 272109-001
- 32-MB EDO Memory Expansion Board 220580-001

System Unit

Dimensions (HxWxD)	2.25 x 11.9 x 8.9 in/5.72 x 30.23 x 22.61 cm
Weight (with battery)	6.1 lb/2.75 kg
Stand-Alone Power Requirements	
Nominal Operating Voltage	10.8 V
Nominal Operating	12 W
Peak Operating	15 W
Temperature	
Operating	50° to 95° F/10° to 35° C
Nonoperating	-4° to 140°F/-20° to 60°C
Relative Humidity (noncondensing)	
Operating	10% to 90%
Nonoperating	5% to 95%
Shock	
Operating	10 g, 11 ms, half sine
Nonoperating	60 g, 11 ms, half sine
Vibration	
Operating	0.25 g, 5-500 Hz half octave/min sweep, 1 hour duration
Nonoperating	1.00 g, 5-500 Hz half octave/min sweep, 1 hour duration
Maximum Altitude (unpressurized)	
Operating	10,000 ft/3658 m
Nonoperating	30,000 ft/12192 m

10.4-Inch Color STN Display VGA and SVGA

Dimensions (HxW)	6.3 x 8.4 in/16 x 21.3 cm
Diagonal Size	10.4 in/26.42 cm
Mounting	Internal
Number of Colors	256 from a palette of 256K
Contrast Ratio	25:1-VGA; 20:1-SVGA
Brightness	90 cd/m^2 @ 5mA
Pixel Resolution	
Pitch	.33 x .33 mm
Format	640 x 480-VGA; 800 x 600-SVGA
Configuration	RGB Stripe
Backlight	CCFT - Edgelit
Character Display	80 x 25
Total Power Consumption	4.0 W
Display Inverter Board	
Input Voltage	+5 Vdc, +18 Vdc
Output Voltage	500 Vac
Maximum Input Power	3.5 W
Maximum Output Power	2.5 W

10.4-Inch Color TFT Display VGA and SVGA

Dimensions (HxW)	6.3 x 8.4 in/16 x 21.3 cm
Diagonal Size	10.4 in/26.42 cm
Mounting	Internal
Number of Colors	256 from a palette of 256K
Contrast Ratio	100:1
Brightness	90 cd/m^2 @ 5mA
Pixel Resolution	
Pitch	.33 x .33 mm
Format	640 x 480-VGA; 800 x 600-SVGA
Configuration	RGB Stripe
Backlight	CCFT-Edgelit
Character Display	80 x 25
Total Power Consumption	4 W
Display Inverter Board	
Input Voltage	+5 Vdc, +18 Vdc
Output Voltage	500 Vac
Maximum Input Power	3.5 W
Maximum Output Power	2.5 W

Hard Drives[1]

	810-MB	**1-GB**
Formatted Capacity Per Drive	815.9 MB	1088 MB
Type	65	65
Height (with drive frame)	2.5 in/6.3 cm	2.5 in/.5 in
Transfer Rate		
Media	27.4 - 54 Mb/s	27.4 - 54 Mb/s
Interface	up to 16.7 MB/s	up to 16.6 MB/s
Sector Interleave	1:1	1:1
Seek Times (typical, including settling)		
Track-to track	4 ms	4 ms
Average	15 ms	15 ms
Maximum	24 ms	24 ms
Rotational Speed	3634 rpm	3634 rpm
Physical Configuration		
Cylinders	3915	3915
Heads	3	6
Sectors/Track	90-180	90-180
Bytes/Sector	512	512
Logical Configuration		
Cylinders	1579	2108
Heads	16	16
Sectors/Track	63	63
Bytes/Sector	512 KB	512 KB
Buffer Size	128 KB	128 KB

1.44-MB Diskette Drive

Diskette Size	3.5 in/8.8 cm
LED Indicator	Green
Capacity (high/low)	1.44 MB/720 KB
Height	One-third
Rotational Speed	300 rpm
Transfer Rate	500 kb/s
Bytes/Sector	512
Sectors/Track (high/low)	18/9
Tracks/Side (high/low)	80/80
Access Times	
Track-to-Track (high/low)	3/3 ms
Average (high/low)	94/94 ms
Settling Time	15 ms
Latency Average	100 ms
Cylinders (high/low)	80/80
Read/Write Heads	Two

Extended Life Nickel Metal Hydride (NiMH) **Battery Pack**

Dimensions (HxWxD)	0.724 x 2.04 x 8.07 in/1.84 x 5.18 x 20.5 cm
Weight	1.09 lb/.495 kg
Energy	
Nominal Open Circuit Volt	10.8 Vdc
Rated Capacity	2800 mAh
Standard Recharge Rate	27 W Maximum/7 W Minimum
Battery Life[2]	2-3 hrs
Temperature	
Operating	50° to 104°F/10° to 40°C
Storage	
No time limit	-4° to 86°F/-20° to 30°C
No longer than 3 months	-4° to 104°F/-20° to 40°C
No longer than 1 month	-4° to 122°F/-20° to 50°C

AC Adapter

Dimensions (HxWxD)	1.3 x 5.0 x 3.0 in/3.3 x 12.7 x 7.6 cm
Weight (without cords)	.612 lb/.28 kg
Cord Length (approximate)	12.5 ft/3.81 m
Power Supply Ratings	
Voltage Range	100 - 120/220 - 240 V
Input Current	0.8A/0.4 A
Input Frequency	50 - 60 Hz
Maximum Output Voltage	16.5 V dc
Maximum Output Current	2.6 A
Maximum Output Power	27 W
Maximum Transient	1 kV for 50 nx
Minimum Charge Time	1.5 hr

Automobile Adapter

Rated Input Voltage	10-18 V dc
Rated Input Current	2.4 Amp
Maximum Output Voltage	17.5 V dc
Maximum Output Current	1.5 Amp
Maximum Output Power	19 W

System Memory

Memory Type	Fast-Page SDRAM (Armada 1120 and 1120T) EDO (Armada 1130 and 1130T)
Standard Memory	8 MB/16 MB
Memory Speed (ns)	70
Maximum Memory Supported	24 MB/48 MB

[1]Hard drive specifications may vary slightly depending on vendor.
[2]Battery life is based on an estimated typical use pattern of an average user and will vary based on the configuration of the computer and theusage pattern of the individual user.

.