COPYRIGHT © 1988 by BOMARC SERVICES P.O. BOX 1113 CASPER, WYOMING 82602

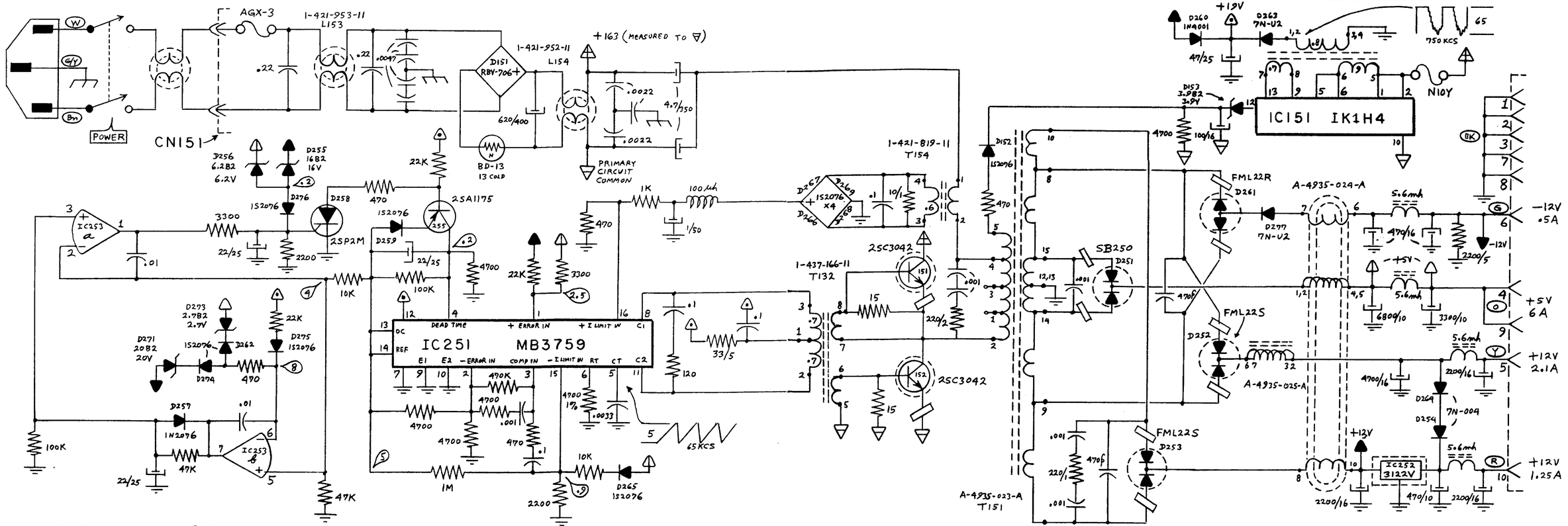

I.C.		⊽	⏚
253	358	8	4

SONY MODULE # 68-1074-01

UNIT DRAWN PROVIDED COURTESY OF "THE BLOB"

APPLE #699-5047 for Mac SE

11/29/88-

SONY | CR-44 | SWITCHING POWER SUPPLY MODULE