COPYRIGHT © 1989 by BOMARC SERVICES P.O. BOX 1113 CASPER, WYOMING 82602

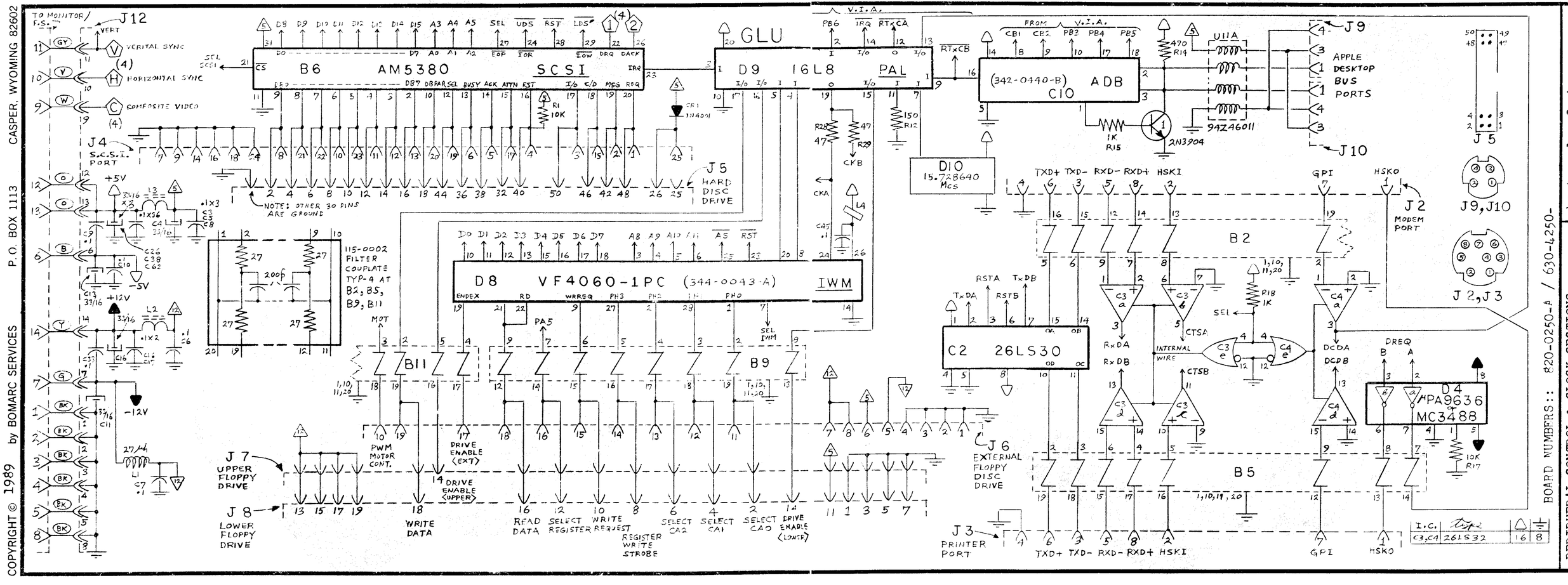

BOARD NUMBERS:: 820-0250-A / 630-4250-

UNIT DRAWN PROVIDED COURTESY OF "PYRAMID TECHNOLOGY"

APPLE	M5010 "MacINTOSH SE"	PERIPHERAL CONTROL & CLOCK SECTIONS	COMPUTER MAINFRAME	sheet 1 of 4	4/27/89