STANDARD KEYBOARD FOR MacINTOSH II/SE

APPLE/ALPS — M0116 — 12/19/88-

UNIT DRAWN PROVIDED COURTESY OF "THE BLOB"

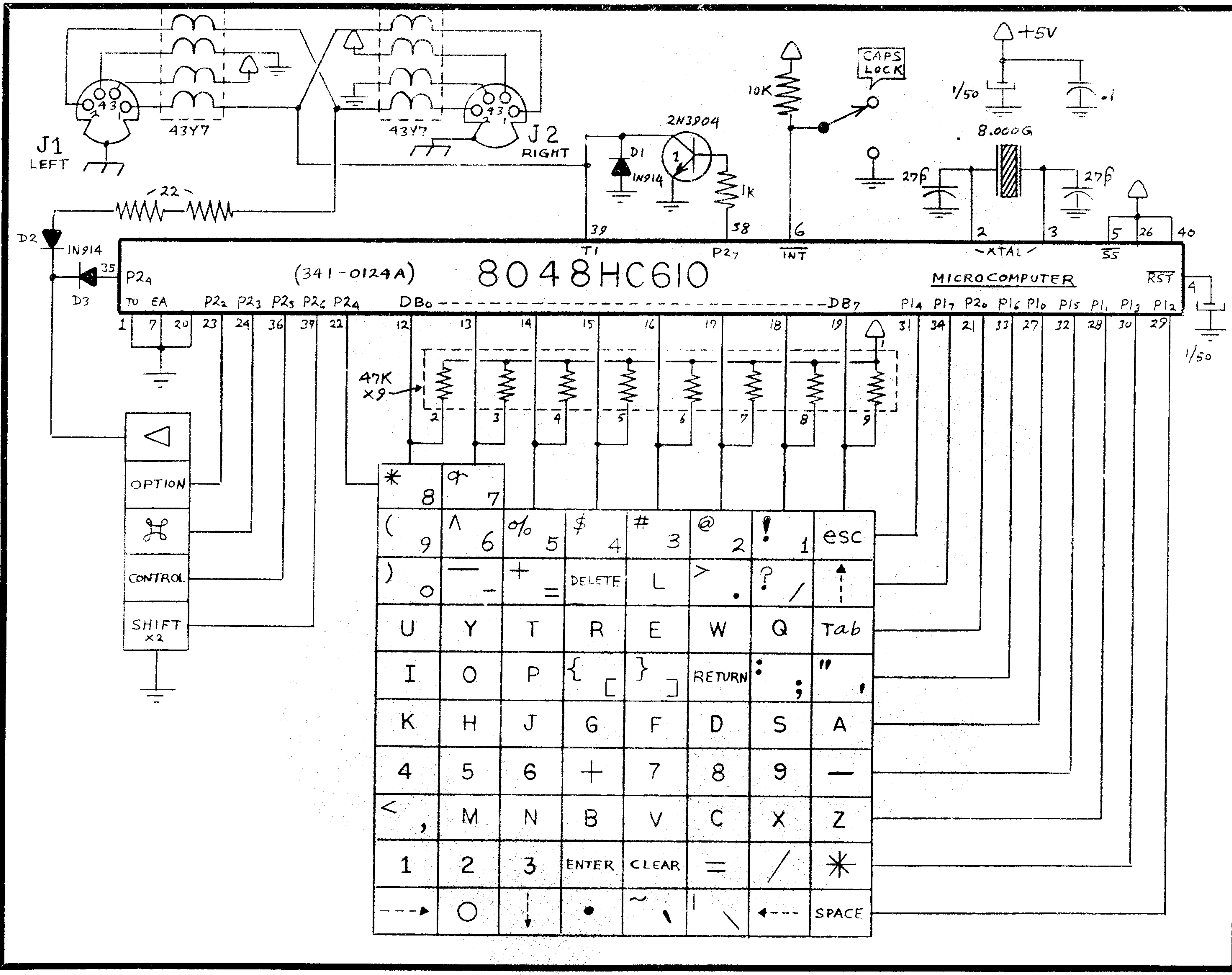

CASPER, WYOMING 82602
P.O. BOX 1113
by BOMARC SERVICES

COPYRIGHT © 1988