8200

# *GREEN 753*

# NOTEBOOK COMPUTER

# SERVICE MANUAL

Version: 1.0
Dec. 12, 1995

GVC/ALPHA-TOP

# *GREEN 753*

# NOTEBOOK COMPUTER

# SERVICE MANUAL

Version: 1.0
Dec. 12, 1995

GVC/ALPHA-TOP

CREEN 753

NOTEBOOK COMPUTER

SERVICE MANUAL

# Table of Contents


*Chapter 1* *Specification*

*Chapter 2* *Power Supply*

*Chapter 3* *DMA, Timer/Counter*

*Chapter 4* *Interrupts*

*Chapter 5* *Memory Address Mapping*

*Chapter 6* *I/O Address Mapping*

*Chapter 7* *Connector & Pin Assignment*

*Chapter 8* *INT Function*

*Chapter 9* *BIOS Setup*

*Chapter 10* *Post Code & Error Handling*

*Chapter 11* *CPU Setting Table*

*Chapter 12* *Schematics*

*Chapter 13* *System Block Diagram*

*Chapter 14* *Main Board Layout Placement*

*Chapter 15* *System & Modular Parts Assembly and Disassembly Diagram*

## 1..General Description

This document describes the detailed product specification of the notebook.
Green753 is a full function, high performance notebook providing complete multimedia functionalities with 11.8" SVGA color LCD. The notebook has CD-ROM drive built in and optional internal MPEG module which enables the playback motion pictures in most of the CD-ROM titles available in the market.

## 2..CPU

- Intel P54C, P54LM, P54CSLM and P55C series
- ZIF socket
- 3.3V for basic configuration
- Regulator to match different CPU power rail
  (P54C/3.3V, P54LM/2.9V, P54CSLM/2.9V, P55C/2.5V)
- Running up to 166 MHz (internal clock)
  (Max. Speed of CPUs:P54C-90, P54LM-100, P54CSLM-150, P55C-166)
- BUS clock up to 66 MHz

## 3..Core Logic.

- Controller: Opti-Viper chipset
- Supports concurrent 32-bit PCI BUS
- Supports L1 and L2 write back cache
- Supports synchronous burst pipeline 3.3V SRAM
- Supports Local IDE

## 4..Memory

### 4.1..Main Memory:

- 8MB on board
- 8/16/32 MB memory card options (72-pin standard DIMM socket x 2)
- 5V DRAM

### 4.2..ROM:

- 128KB x 2 or 256KB x 1 Flash Memory

### 4.3..Cache Memory

- 256K write-back cache, synchronous SRAM

## 5..Mass Storage

### 5.1..HDD:

- 2.5" ,19 mm HDD space
- Local IDE support

### 5.2..FDD:

- 3.5" 720K/1.2MB/1.44MB diskettes support , 1.2MB format support for NEC PC compatibility

5.3..CD-ROM drive:
- Manufacturer: TEAC. Toshiba
- 5.25" CD-ROM
- 4X speed
- IDE interface

**6..Video System**

6.1..Video Controller: Cirrus Logic 7543
- supports Feature-Connector for MPEG and TV solution
- supports video overlay

6.2..Graphic Feature
- Windows GUI Accelerator
- Full power management feature
- Running on PCI BUS
- Software MPEG
- Support up to 1024×768×256 colors mode on external CRT
- Support 800×600 LCDs

6.3..Video Memory:
- 1MB for standard configuration
- Room for 2MB

6.4..LCD Display:
- The whole assembly is field-interchangeable
- 11.3" /DSTN/SVGA: Hitachi-9900, Sanyo-FE53
- 11.3" or 11.8" /TFT/SVGA: Hitachi, Mitsubishi-ADI

**7..I/O Ports**

7.1..Standard Ports
- One 16550 UART RS-232 serial port ( 9-pin male D-connector)
- One parallel port support EPP/ECP ( 25-pin female D-connector)
- One video port for external analog VGA monitor ( 15-pin female D-connector)
- One game port (15-pin female D-connector)
- One external auto-sensed PS/2 keyboard/mouse connector( 6-pin mini-DIN connector),
- One DC input port for external AC adaptor (4-pin DC jack)
- One Type III and one Type II PCMCIA card socket or two Type II CLPD6729
- Docking Station Connector
- Line in /Line out/ Mic in for internal Sound Card
- IR port, IrDA standard
- Composite video output port for display on TV set
- Game/Midi port

7.2..I/O controller

- Controllor: Cirrus Logic-6729
- 3.3V/5V card support
- Running on PCI BUS
- Software configurable

**8..I/O Devices**

8.1..Keyboard:

- US/Europe, DOS/V keyboard for Japan
- 86 keys
- Key stroke: 3 mm
- Twelve function keys
- Inverted "T" cursor control keys layout
- Screwless removable
- Internal keyboard works as standard 101/102 desktop keyboard

8.2..Pointing Device: Touchpad

- Touchpad under space bar of keyboard
- Both external PS/2 mouse and internal pointing device can work concurrently

8.3..Sound System

- Controller: ESS 1788
- Sound Blaster, Sound Blaster Pro Compatible and Microsoft Sound System For Windows compatible
- 16-bit stereo sound
- Microphone and two speaker built-in

8.4..Optional MPEG Module

- Daughter card design
- MPEG I decoder: Winbond
- Video processor: AuraVision VxP-201
- MPEG I decompression
- Support all MPEG related video format such as CDI, VideoCD...etc.
- Video overlay through graphics controller
- Filtering, Scaling and Zooming with 2D interpolation

**9..System Software**

9.1..System BIOS:

- SystemSoft

9.2..VGA BIOS:

- Cirrus Logic

9.3..Operating System:

- Optional MS-DOS 6.22 or above version
- Optional Windows 3.1 or above version
- Optional OS/2 2.1 for Windows or above version
- Optional Windows NT

- Optional Windows '95

9.4..Device Drivers and Utilities:

- Cirrus Logic: VGA driver and utility
- ESS: Audio driver
- Phoenix/SystemSoft: PCMCIA driver
- ALPS: Touch-pad driver
- TEAC: CD-ROM driver
- Comcore: Software MPEG driver(optional)

**10..CMOS Setup:**

10.1..Normal information

- Displays system information
- Password protection of setup entry
- No cursor stop if item is unchangeable
- Master password support
- Block mode IDE support

**11..Power Management System**

- Multiple-mode power management scheme
- Static suspend
- Suspend to HDD
- Modem ring and any key triggered resume
- APM1.1 support
- Battery gas gauge support
- Suspend or warning on low battery

**12..Power Subsystem**

12.1..AC Adapter:

- Small form factor

12.2..Battery:

- Battery pack with 10-cell NiMH or 9-cell Lithium Ion, user interchangeable
- Removable and rechargeable
- Battery gas gauge function support, providing accurate battery charging and discharging status

**13..Human Factors**

13.1..Dimension:

- 299(W)×230(D)×56 (H)mm
- 11.8" × 9." × 2.2"

13.2..Weight:

- 7 lbs (3.2Kgs) with battery and CD-ROM drive

13.3..Construction Description:

- LCD assembly is field upgradable with a few screws removed, and main unit is independent to the type of LCD module used
- Speakers are located at two upper corner of the base, and the internal microphone is located at the palm rest area and under the Touchpad module

13.4..LCD indicators:

- A/C- IN
- Battery
- Num Lock
- Caps Lock
- Scroll Lock
- Pad Lock
- HDD
- FDD
- CD-ROM
- PCMCIA
- SUSPEND

13.5..Hot Key:

- LCD brightness
- LCD contrast
- Audio Volume
- Display mode
- Suspend

**14..Docking Station: Mini Docking**

**15..Accessories**

- User's manual
- AC adapter
- Power cord
- Utility diskette
- Carrying bag
- Mini-docking (port replicator)
- External Charger

**16..Optional Items**

- Spare battery pack
- Memory expansion card
- MPEG module
- DOS
- Windows
- Windows95
- OS/2 for Windows
- Windows NT

**17..Environment**

17.1..Temperature:
- Operating: 5°~35°C
- Non-operating: -20°~60°C

17.2..Humidity:
- Operating: 30%~90% ( non-condensing)
- Non-operating: 5%~95% ( non-condensing)

17.3..Altitude:
- Operating: -200~10000 ft
- Non-operating: -200~30000 ft

17.4..Shock:
- Operating: 10G, 11ms
- Non-operating: 50G, 11ms

17.5..Vibration:
- Operating: 10~27 Hz, 0.01"
- Non-operating: 5~62 Hz, 0.02"

17.6..Drop:
- 900mm

17.7..Noise:
- 35dB ( max.) at 1 meter

17.8..ESD:
- Follow IEC 801-2 standard
- 0~15KV: no error allowed

17.9..P.L.T.:
- 1KV: no any error

**18..Regulation**

18.1..Safety:
- UL 1950, CSA, TUV, CE

18.2..EMI:
- FCC class B, BZT, VCCI

**19..MTBF**
- 20,000 hrs, 90% confidence level

**20..MTTR**
- 30 min.

# *Chapter 2 Power Supply*

## ADAPTER SPECIFICATION

### Input Characteristics:

* Input Voltage Range: 100Vax to 240Vac, single phase.
* Input Frequency Range: 47 Hz to 63 Hz.
* Max. Input Ac Current: 1 A, 90Vac input, full load.
* Inrush Current(coldstart): 20A @ 115Vac, 40A @ 230Vac @max. load 25 DEG.C.
* Efficiency: 75% min, at 115Vac input, full load, after warm up 30 sec.

### Output Characteristics:

Static Output Characteristics (VO):

| Output Voltage | Load | Range | Regulation | Ripple & Noise |
|---|---|---|---|---|
| 1 +19V | Min. 0A | Max. 1.8A | +/- 1V | 250 mV |

* Ripple & Noise Test: Use 20MHz bandwidth frequency oscilloscope.
* Add 0.1 uF/10uF capacitor at output connector terminals for ripple & noise test.

Dynamis Output Characteristics:

* Turn-on Delay Time: 2 sec max. @ 115Vac, full load.
* Hold up Time: 10 mS min, @ 115Vac, full load.
* Short Circuit Protection: Output can be shorted without damage.

### Dielectric Withstand Voltage:

* Primary To Secondary: 1500 Vac 10 mA max, at 120 Vac 60 Hz.
* Leakage Current: 0.75 mA max, at 120 Vac 60 Hz.

# Chapter 2

## RFI/EMI: Internal filter to meet

* FCC part 15 class B.
* VFG 243/1991.

## Product Safety:

* This power supply is designed to meet the following spec.:
  1.) UL 1950
  2.) CSA C22.2 Level 3
  3.) TUV EN60 950

## Environment:

* Operating Temperature: 0 to 40 degree C.
* Operating Relative Humidity: 15 to 85%.
* Storage Temperature: -10 to 85 degree C.
* Storage Relative Humidity: 5 to 90%.
* Altitude: Operae properly at any altitude between 0 to 10,000 feet.
* Vibration:

  Operating: 0.75G zero to peak, 5 to 500 Hz, 0.5 octave/minute, one cycle,
  5 to 500 to 5 Hz per axis in each of three mutually perpendicular axis.

  Non-operating: 1.5G zero to peak, 5 to 50 Hz, 0.5 octvae/minute, one cycle,
  5 to 500 to 5 Hz per axis in each of three mutually perpendicular axis.

# DC/DC POWER SPECIFICATION

## Introduction:

* High efficiency, DC/DC converter for notebook computer.

## Input Characteristics:

### Input voltage range:

* AC/DC adapter: +19V( ±1V).
* Battery: 10 cells for NiMH Battery.(Optional Lithium-Ion 9 cells.)

### Input current range:

* From adapter: 1.8 A max(including charger).
* From battery: 2.2 A(typ.).

### Input pin assignment:

* Input jack: (1) SENSE (2) VA (3) GND (4) GND
* Battery input connector: (1) VB (2) GND (3) BTID (4) NTC1 (5) NTC2 (6) DQ

### Description:

* VA: connected to charge source.
* VB: discharge path for battery.
* GND: system ground.
* DQ: battery gauge.
* NTC1 & NTC2: both pins of NTC Thermister
* BTID: Battery ID( the type of battery).

## Output Characteristics:

Output voltage parameter:
+5V O/P:

| PARAMETER | SYMBOL | UNIT | MIN | NOM | MAX |
|---|---|---|---|---|---|
| Output current | Iout | Adc | 0 | | 3 |
| O/P Surge current | Isur | Adc | | | 3.5 |
| Output voltage | Vout | Vdc | 4.75 | 5 | 5.25 |
| O/P Ripple | Vrip | mV(p-p) | | | 100 |
| OCP | Ilim | Adc | | | 4 |

# Chapter 2

+3.3V O/P:

| PARAMETER | SYMBOL | UNIT | MIN | NOM | MAX |
|---|---|---|---|---|---|
| Output current | Iout | Adc | 0 | | 3 |
| O/P Surge current | Isur | Adc | | | 3.5 |
| Output Voltage | Vout | Vdc | 3.3 | 3.45 | 3.6 |
| O/P Ripple | Vout | mV(p-p) | | | 100 |

+12V O/P:

| PARAMETER | SYMBOL | UNIT | MIN | NOM | MAX |
|---|---|---|---|---|---|
| Output current | Iout | mAdc | 0 | | 150 |
| O/P Surge current | Isur | mAdc | | | 200 |
| Output Voltage | Vout | Vdc | 1.4 | 12 | 12.6 |
| O/P Ripple | Vout | mV(p-p) | | | 240 |

+2.5V /+2.9V /+3.1V /+3.3V O/P:

| | MIN | NOM | MAX |
|---|---|---|---|
| O/P Current | 0 | | 3 |
| Surge Current | | | 3.5 |
| Ripple | | | 100 |

* Remark: 1. The voltage is adjusted by a switch(sw3).
2. The voltage tolerance is ±5%.

2.5V

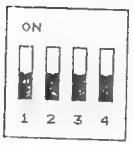


2.9V

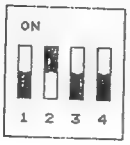


3.1V

3.3V

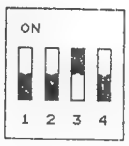


## Charger Characteristics:

Charger current:
1) Quick Charge: 1.8~2.2A
2) Puls Trickle Charge: 1.8~2.2A

Charger Control:

1-delta temperature / delta time
2-Max voltage
3-Max temperature
4-Safety time
5-Nagative delta voltage

## Efficiency:

0.8 min

## Test Condition:

* VBA: From adapter or battery
* +5V: 3A
* +3.3V: 3A
* +12V: 150mA
* +2.5V /+2.9V /+3.1V /+3.3V: 3A

## Protection:

* OCP: Over Current Protection.
  +5V Protection: 4A min
  +3.3V Protection: 4A min
  +2.5V /+2.9V /+3.1V /+3.3V Protection: 4A min

## Humidity:

* Operating: 15-85% non-condensing
* Storage: 5-90% non-condensing

## Temperature:

* Operating: 0~40 degree C
* Storage: -20~+70 degree C

## Burn-In:

* 24 hours at 40 degree C, normal input voltage, full load.

# Chapter 3 DMA, Timer/Counter

## DMA channel:

| DMA Channel No. | Function |
|---|---|
| Channel 0 | Available |
| Channel 1 | Sound Module |
| Channel 2 | Floppy Disk |
| Channel 3 | ECP Support |
| Channel 4 | [Cascade] |
| Channel 5 | Available |
| Channel 6 | Available |
| Channel 7. | Available |

## Programmable Timer/Counters

| Channel No | Function |
|---|---|
| Channel 0 | Supports system timer |
| Channel 1 | Supports refresh cycles |
| Channel 2 | Supports the audio speaker |

# Chapter 4 Interrupts

| Interrupt | Function |
|---|---|
| IRQ 0 | System Timer |
| IRQ 1 | Keyboard |
| IRQ 2 | [Cascade] |
| IRQ 3 | COM2 (IrDA) |
| IRQ 4 | COM1 |
| IRQ 5 | Parallel Printer Port 2 |
| IRQ 6 | Floppy Disk |
| IRQ 7 | Parallel Printer Port 1 |
| IRQ 8 | Clock/Calendar |
| IRQ 9 | Cascaded to INT 0AH (IRQ 2) / Sound Module |
| IRQ 10 | MPEG Card |
| IRQ 11 | PCMCIA Socket Service |
| IRQ 12 | Touch-Pad |
| IRQ 13 | Coprocessor |
| IRQ 14 | Fixed Disk Controller |
| IRQ 15 | Reserved |

Note: 1. IRQ 3, 4, 5, 7, 9, 10, 11, 12, 14 are connected to PCMCIA controller, but available for PCMCIA function only when the IRQ is not used by other device.

2. IRQs connected to Docking Port are IRQ 3-5, 7, 9, 10-12, 14, 15.

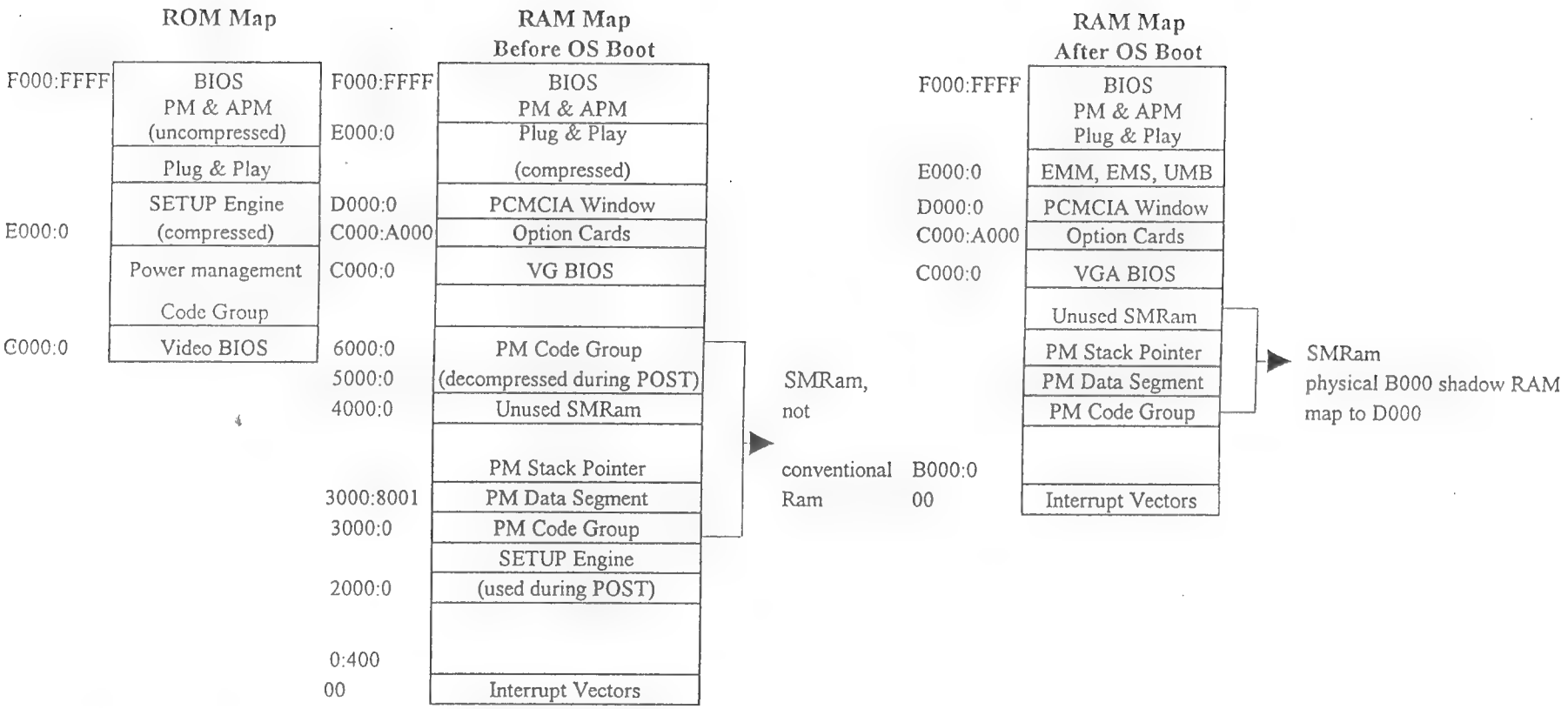
ROM Map
F000:FFFF
BIOS
PM & APM
(uncompressed)
Plug & Play
SETUP Engine
(compressed)
E000:0
Power management
Code Group
C000:0
Video BIOS
RAM Map
Before OS Boot
F000:FFFF
BIOS
PM & APM
E000:0
Plug & Play
(compressed)
D000:0
PCMCIA Window
C000:A000
Option Cards
C000:0
VG BIOS
6000:0
PM Code Group
5000:0
(decompressed during POST)
4000:0
Unused SMRam
PM Stack Pointer
3000:8001
PM Data Segment
3000:0
PM Code Group
SETUP Engine
2000:0
(used during POST)
0:400
00
Interrupt Vectors
SMRam,
not
conventional
Ram
RAM Map
After OS Boot
F000:FFFF
BIOS
PM & APM
Plug & Play
E000:0
EMM, EMS, UMB
D000:0
PCMCIA Window
C000:A000
Option Cards
C000:0
VGA BIOS
Unused SMRam
PM Stack Pointer
PM Data Segment
PM Code Group
B000:0
00
Interrupt Vectors
SMRam
physical B000 shadow RAM
map to D000

# Chapter 6 I/O Address Mapping

| Hexadecimal Range | Devices | Usage |
|---|---|---|
| 000-01F | DMA conntroller 1 | System |
| 020-03F | Interrupt controller 1 | System |
| 040-05F | Timer | System |
| 060-06F | Keyboard I/O | System |
| 070-07F | Real time clock,NMI mask | System |
| 080-09F | DMA page register | System |
| 0A0-0BF | Interrupt controller 2 | System |
| 0C0-0DF | DMA conntroller 2 | System |
| 0F0 | Clear math coprocessor busy | System |
| 0F1 | Reset math coprocessor | System |
| 0F8-0FF | Math coprocessor | System |
| 1F0-1F8 | Fixed disk | I/O |
| 200-207 | Game | I/O |
| 278-27F | Parallel printer port 2 | I/O |
| 2F8-2FF | Serial port 2 | I/O |
| 300-31F | Prototype card | I/O |
| 360-36F | Reserved | I/O |
| 378-37F | Parallel printer port 1 | I/O |
| 380-38F | SDLC,bisynchronous 2 | I/O |
| 3A0-3AF | Bisynchronous 1 | I/O |
| 3B0-3BF | Mono display printer adapter | I/O |
| 3C0-3CF | Reserved | I/O |
| 3E0-3EF | Color/graphic monitor adapter | I/O |
| 3FO-3F7 | PCMCIA controller | I/O |
| 3F8-3FF | Serial port 1 | I/O |

## *The Pin Assignment of GAME/MIDI Port*

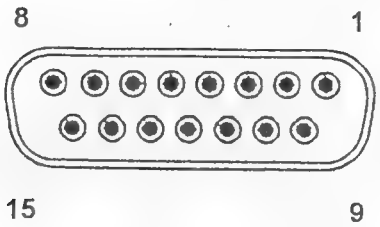


| Pin | Signal | Pin | Signal |
|---|---|---|---|
| 1 | VCC | 9 | VCC |
| 2 | Joystick Switch A | 10 | Joystick Switch C |
| 3 | Joystick Data A | 11 | Joystick Data C |
| 4 | GND | 12 | MIDI OUT |
| 5 | GND | 13 | Joystick Data D |
| 6 | Joystick Data B | 14 | Joystick Switch D |
| 7 | Joystick Switch B | 15 | MIDI IN |
| 8 | VCC | | |

## *The Pin Assignment of Video Port*

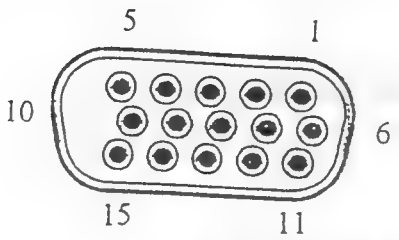


| Pin | Signal | Pin | Signal |
|---|---|---|---|
| *1* | Red | *9* | NC |
| *2* | Green | *10* | Ground |
| *3* | MS2 | *11* | MS0 |
| *4* | NC | *12* | MS1 |
| *5* | Ground | *13* | Horizontal Sync |
| *6* | Ground | *14* | Vertical Sync |
| *7* | Ground | *15* | NC |
| *8* | Ground | | |

# G753 DOCKING SIGNAL LIST

| Pin | SYMBOL | Pin | SYMBOL | Pin | SYMBOL | Pin | SYMBOL | Pin | SYMBOL |
|---|---|---|---|---|---|---|---|---|---|
| 1 | SENSE | 49 | AD11 | 97 | AD28 | 145 | PGNT#1 | 193 | SA2 |
| 2 | SENSE | 50 | AD12 | 98 | AD29 | 146 | PGNT#2 | 194 | SA3 |
| 3 | VDPCLD | 51 | AD13 | 99 | AD30 | 147 | PREQ#0 | 195 | SA4 |
| 4 | SCL | 52 | AD14 | 100 | AD31 | 148 | PREQ#1 | 196 | SA5 |
| 5 | SDA | 53 | AD15 | 101 | DKIN | 149 | PREQ#2 | 197 | SA6 |
| 6 | UV0 | 54 | RESET# | 102 | DENSEL | 150 | PAR | 198 | SA7 |
| 7 | UV1 | 55 | FRAME# | 103 | WGATE# | 151 | DKGND# | 199 | SA8 |
| 8 | UV2 | 56 | STOP# | 104 | WDATA# | 152 | PW-SW | 200 | LA9 |
| 9 | UV3 | 57 | TRDY# | 105 | DRV1# | 153 | CLK-PCI3 | 201 | VA |
| 10 | UV4 | 58 | IRDY# | 106 | RDATA# | 154 | NC | 202 | VA |
| 11 | UV5 | 59 | DEVSEL# | 107 | MTR1# | 155 | GND | 203 | VA |
| 12 | UV6 | 60 | PERR# | 108 | LPTERROR# | 156 | DCDO | 204 | VA |
| 13 | UV7 | 61 | NC | 109 | LPTSLCT | 157 | DSRO | 205 | VA |
| 14 | Y0 | 62 | NC | 110 | LPTPE | 158 | SINO | 206 | VA |
| 15 | Y1 | 63 | NC | 111 | LPTBUSY | 159 | RTSO | 207 | VA |
| 16 | Y2 | 64 | FP23 | 112 | LPTACK# | 160 | SOUTO | 208 | VA |
| 17 | Y3 | 65 | FCBLANK# | 113 | LPTAFD# | 161 | CTSO | 209 | ON2/3 |
| 18 | Y4 | 66 | FCDCLK | 114 | LPTINIT# | 162 | DTRO | 210 | NC |
| 19 | Y5 | 67 | FP22 | 115 | LPTSLCTIN# | 163 | RIO | 211 | NC |
| 20 | Y6 | 68 | FCEVIDEO# | 116 | LPTSTB# | 164 | RXD1 | 212 | NC |
| 21 | Y7 | 69 | FCESYNC# | 117 | PD0 | 165 | TXD1 | 213 | NC |
| 22 | VD-HSYNC | 70 | NC | 118 | PD1 | 166 | RTS1# | 214 | NC |
| 23 | VD-VSYN | 71 | RED | 119 | PD2 | 167 | DTR1# | 215 | NC |
| 24 | VCC | 72 | GREEN | 120 | PD3 | 168 | CTS1# | 216 | +12V |
| 25 | VCC | 73 | BLUE | 121 | PD4 | 169 | DSR1# | 217 | +12V |
| 26 | GND | 74 | EHSYNC | 122 | PD5 | 170 | DCD1# | 218 | +12V |
| 27 | GND | 75 | EVSYNC | 123 | PD6 | 171 | RI1# | 219 | GND |
| 28 | FP16 | 76 | INDEX# | 124 | PD7 | 172 | NC | 220 | GND |
| 29 | FP17 | 77 | WP# | 125 | KBDATA | 173 | NC | 221 | GND |
| 30 | FP18 | 78 | DSKCHG# | 126 | KBCLK | 174 | NC | 222 | SWA |
| 31 | FP19 | 79 | STEP# | 127 | MSCLK | 175 | NC | 223 | SWB |
| 32 | FCP4 | 80 | FDIR# | 128 | MSD | 176 | NC | 224 | SWC |
| 33 | FCP5 | 81 | TRKD# | 129 | BMSIN | 177 | TVL | 225 | SWD |
| 34 | FCP6 | 82 | HDSEL# | 130 | BMSOUT | 178 | TVL | 226 | BJDD |
| 35 | FCP7 | 83 | SERR# | 131 | RST# | 179 | TVR | 227 | BJDC |
| 36 | GND | 84 | PLOCK | 132 | WAVE-R | 180 | TVR | 228 | BJDB |
| 37 | GND | 85 | AD16 | 133 | WAVE-L | 181 | SD0 | 229 | BJDA |
| 38 | AD0 | 86 | AD17 | 134 | WAVE-R | 182 | SD1 | 230 | NC |
| 39 | AD1 | 87 | AD18 | 135 | WAVE-L | 183 | SD2 | 231 | NC |
| 40 | AD2 | 88 | AD19 | 136 | C/BE#0 | 184 | SD3 | 232 | NC |
| 41 | AD3 | 89 | AD20 | 137 | C/BE#1 | 185 | SD4 | 233 | NC |
| 42 | AD4 | 90 | AD21 | 138 | C/BE#2 | 186 | SD5 | 234 | NC |
| 43 | AD5 | 91 | AD22 | 139 | C/BE#3 | 187 | SD6 | 235 | MDATA |
| 44 | AD6 | 92 | AD23 | 140 | INT#A | 188 | SD7 | 236 | MCLK |
| 45 | AD7 | 93 | AD24 | 141 | INT#B | 189 | IOW# | 237 | NC |
| 46 | AD8 | 94 | AD25 | 142 | INT#C | 190 | AEN | \| | \| |
| 47 | AD9 | 95 | AD26 | 143 | INT#D | 191 | SA0 | 300 | NC |
| 48 | AD10 | 96 | AD27 | 144 | PGNT#0 | 192 | SA1 | | |

# Chapter 7

## The Pin Assignment of COM Port

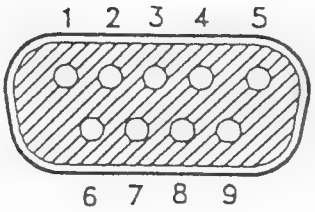


| Pin | Signal | Pin | Signal |
|---|---|---|---|
| 1 | Carrier Detect | 6 | Data Set Ready |
| 2 | Receive Data | 7 | Request to Send |
| 3 | Transmit Data | 8 | Clear to Send |
| 4 | Data Terminal Ready | 9 | Ring Indicate |
| 5 | Signal Ground | | |

# Chapter 8 INT Function

The following lists the available interrupt services made through the system BIOS. For detailed information about each function, refer to any one of the many books on interrupts.

| INT | Type | Function |
|---|---|---|
| 02 | Logical | Nonmaskable Interrupt |
| 05h | Software | Print Screen |
| 08h | Hardware | System Timer |
| 09h | Hardware | Keyboard |
| 0Ah | Hardware | Slave PIC Redirect |
| 0Eh | Hardware | Diskette |
| 10h | Software | Video |

| AH Value | Function |
|---|---|
| 00h | Set Video Mode |
| 01h | Set Cursor Type |
| 02h | Set Cursor Position |
| 03h | Read Current Cursor Position |
| 04h | Not Supported |
| 05h | Select New Video Page |
| 06h | Scroll Current Page Up |
| 07h | Scroll Current Page Down |
| 08h | Read Character/Attribute to Screen |
| 09h | Write Character/Attribute from Screen |
| 0Ah | Write Character Only to Screen |
| 0Bh | Set Color Palette |
| 0Ch | Write Pixel |
| 0Dh | Read Pixel |
| 0Eh | Write Teletype to Active Page |
| 0Fh | Return Video Status |
| 10h-12h | Not Supported |
| 13h | Write String |
| 14h-FFh | Reserved |

| | | |
|---|---|---|
| 11h | Software | Equipment List |
| 12h | Software | Memory Size |
| 13h | Software | Diskette Service (Interrupt 40h) |

| AH Value | Function |
|---|---|
| 00h | Reset Diskette System |
| 01h | Read Diskette Status |
| 02h | Read Diskette Sectors |
| 03h | Write Diskette Sectors |
| 04h | Verify Diskette Sectors |
| 05h | Format Diskette Track |
| 06h, 07h | Reserved |
| 08h | Read Drive Parameters |
| 09h-14h | Reserved |
| 15h | Read Drive Type |
| 16h | Detect Media Change |
| 17h | Set Diskette Type |

## BIOS Interrupts Continued...

| INT | Type | Function |
|---|---|---|
| | | 18h Set Media Type for Format |
| | | 19h-FFh Reserved |
| 13h | Software | Hard Disk Services |
| | | **AH Value** **Function** |
| | | 00h Reset Disk System |
| | | 01h Read Disk Status |
| | | 02h Read Disk Sectors |
| | | 03h Write Disk Sectors |
| | | 04h Verify Disk Sectors |
| | | 05h Format Disk Cylinder |
| | | 06h, 07h Reserved |
| | | 08h Read Drive Parameters |
| | | 09h Initialize Drive Parameters |
| | | 0Ah Read Long Disk Sectors |
| | | 0Bh Write Long Disk Sectors |
| | | 0Ch Seek to Cylinder |
| | | 0Dh Alternate Reset Fixed Disk |
| | | 0Eh Diagnostics 1, Read Test Buffer |
| | | 0Fh Diagnostics 2, Write Test Buffer |
| | | 10h Test for Drive Ready |
| | | 11h Recalibrate Drive |
| | | 12h-14h Reserved |
| | | 15h Read Disk Type |
| | | 16h-18h Reserved |
| | | 19h, 1Ah Not Supported |
| | | 1Bh-FFh Reserved |
| 14h | Software | Serial Communication |
| | | **AH Value** **Function** |
| | | 00h Initialize Serial Communications Port |
| | | 01h Send Character |
| | | 02h Receive Character |
| | | 03h Read Serial Port Status |
| | | 04h-FFh Reserved |
| 15h | Software | System Services |
| | | **AH Value** **Function** |
| | | 00h-4Eh Reserved |
| | | 4Fh Keyboard Intercept |
| | | 50h-7Fh Reserved |
| | | 80h Device Open |
| | | 81h Device Close |
| | | 82h Program Termination |
| | | 83h Set Event Wait Interval |
| | | 84h Joystick Support |
| | | 85h System Request Key |
| | | 86h Wait |
| | | 87h Move Block |
| | | 88h Read Extended Memory Size |
| | | 89h Switch Processor to Protected Mode |

## BIOS Interrupts Continued...

| INT | Type | Function | |
|---|---|---|---|
| | | 8Ah-8Fh | Reserved |
| | | 90h | Device Busy Loop |
| | | 91h | Interrupt Complete |
| | | 92h-BFh | Reserved |
| | | C0h | Return System Configuration Parameters |
| | | C1h | Return Extended BIOS Data Area Segment Address |
| | | C2h | Pointing Device Interface |
| | | C3h-FFh | Reserved |
| 16h | Software | Keyboard | |
| | | **AH Value** | **Function** |
| | | 00h | Read Keyboard Input |
| | | 01h | Return Keyboard Status |
| | | 02h | Return Shift Flag Status |
| | | 03h | Set Typematic Rate and Delay |
| | | 04h | Reserved |
| | | 05h | Store Key Data |
| | | 06h-0Fh | Reserved |
| | | 10h | Read Extended Key Input |
| | | 11h | Return Extended Keyboard Status |
| | | 12h | Return Extended Shift Flags Status |
| | | 13h-FFh | Reserved |
| 17h | Software | Parallel Printer | |
| | | **AH Value** | **Function** |
| | | 00h | Print Character |
| | | 01h | Initialize Printer |
| | | 02h | Read Printer Status |
| | | 03h-FFh | Reserved |
| 18h | Software | Load ROM BASIC | |
| 19h | Software | Bootstrap Loader | |
| 1Ah | Software | System Timer and Real-Time Clock | |
| | | **AH Value** | **Function** |
| | | 00h | Read System Timer Time Counter |
| | | 01h | Set System Timer Time Counter |
| | | 02h | Read Real Time Clock Time |
| | | 03h | Set Real Time Clock Time |
| | | 04h | Read Real Time Clock Date |
| | | 05h | Set Real Time Clock Date |
| | | 06h | Read Real Time Clock Alarm |
| | | 07h | Set Real Time Clock Alarm |
| | | 08h | Read Day of Week from Real Time Clock (SystemSoft only) |
| | | 09h | Write Day of Week to Real Time Clock (SystemSoft only) |
| | | 0Ah-FFh | Reserved |
| 1Bh | Software | Keyboard Break | |
| 1Ch | User | User Timer Tick | |
| 1Dh | BIOS Table | Video Parameters Table | |
| 1Eh | BIOS Table | Diskette Parameters Table | |

## BIOS Interrupts Continued...

| INT | Type | Function |
|---|---|---|
| 1Fh | User | Video Graphics Characters |
| 40h | Software | Diskette BIOS Revector |
| 41h | BIOS Table | Fixed Disk Parameter Table |
| 46h | BIOS Table | Fixed Disk Parameter Table |
| 70h | Hardware | Real Time Clock |
| 71h | Hardware | Redirect Cascade |
| 74h | Hardware | Pointing Device (Mouse) |
| 76h | Hardware | Fixed Disk |

+ Any 80386 and/or coprocessor exception interrupts normally handled by the operating system are vectored by default to the BIOS at system power-on.

# Chapter 9 BIOS Setup

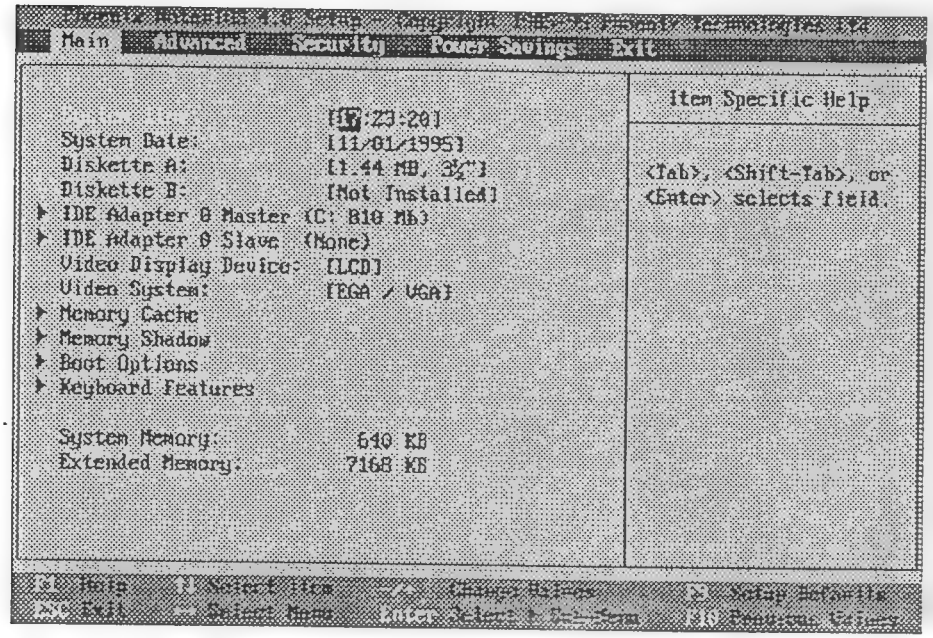


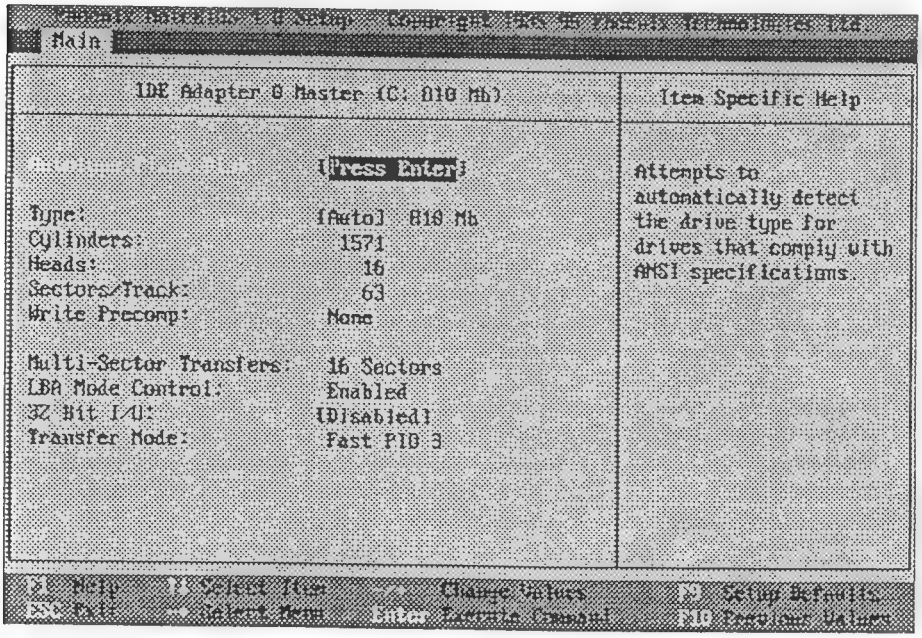

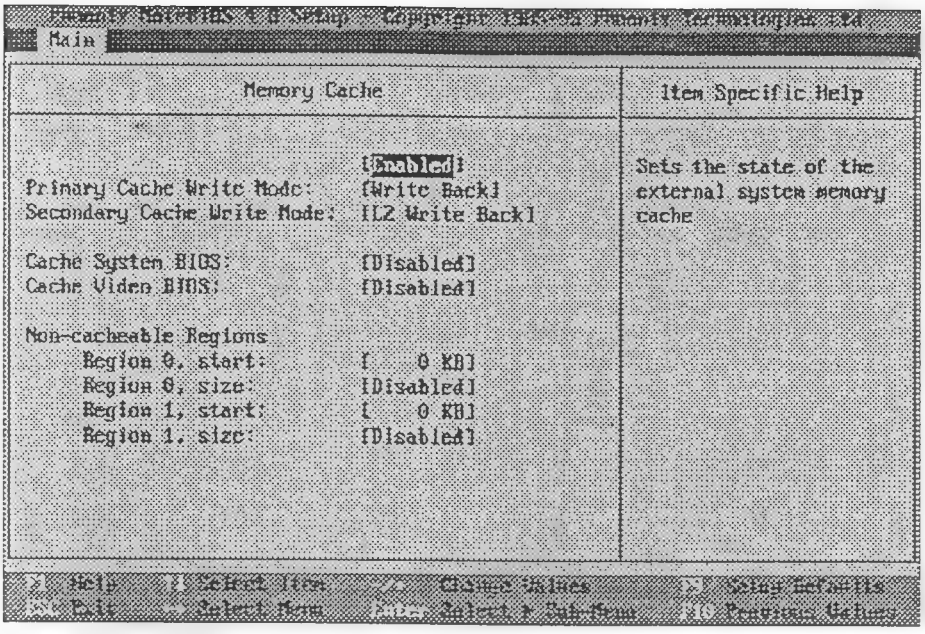
Main
Memory Cache
Item Specific Help
[Enabled]
Primary Cache Write Mode: [Write Back]
Secondary Cache Write Mode: [L2 Write Back]
Cache System BIOS: [Disabled]
Cache Video BIOS: [Disabled]
Non-cacheable Regions
Region 0, start: [ 0 KB]
Region 0, size: [Disabled]
Region 1, start: [ 0 KB]
Region 1, size: [Disabled]
Sets the state of the external system memory cache

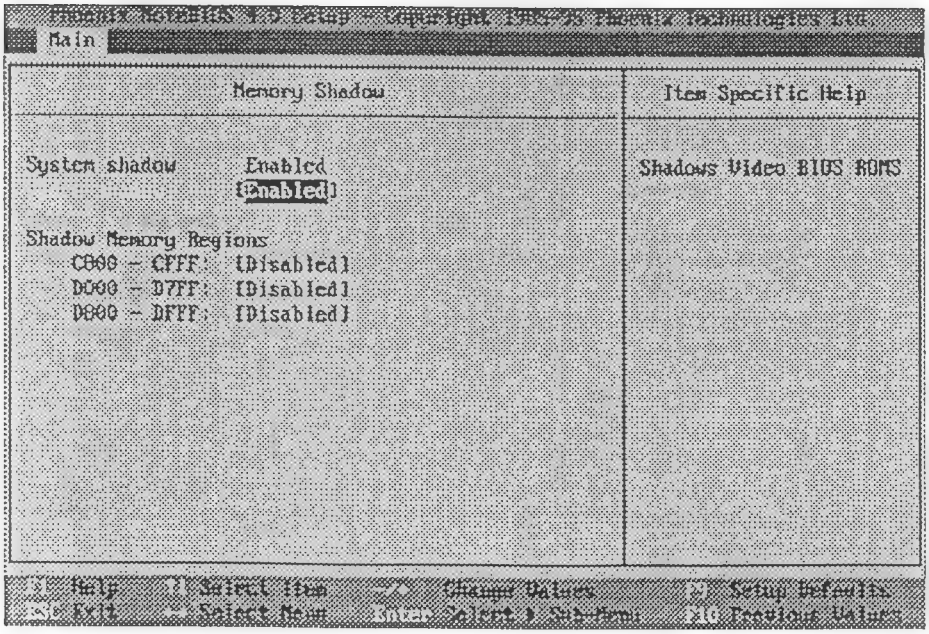
Main
Memory Shadow
Item Specific Help
System shadow Enabled
[Enabled]
Shadow Memory Regions
C000 - C7FF: [Disabled]
D000 - D7FF: [Disabled]
D800 - DFFF: [Disabled]
Shadows Video BIOS ROMS

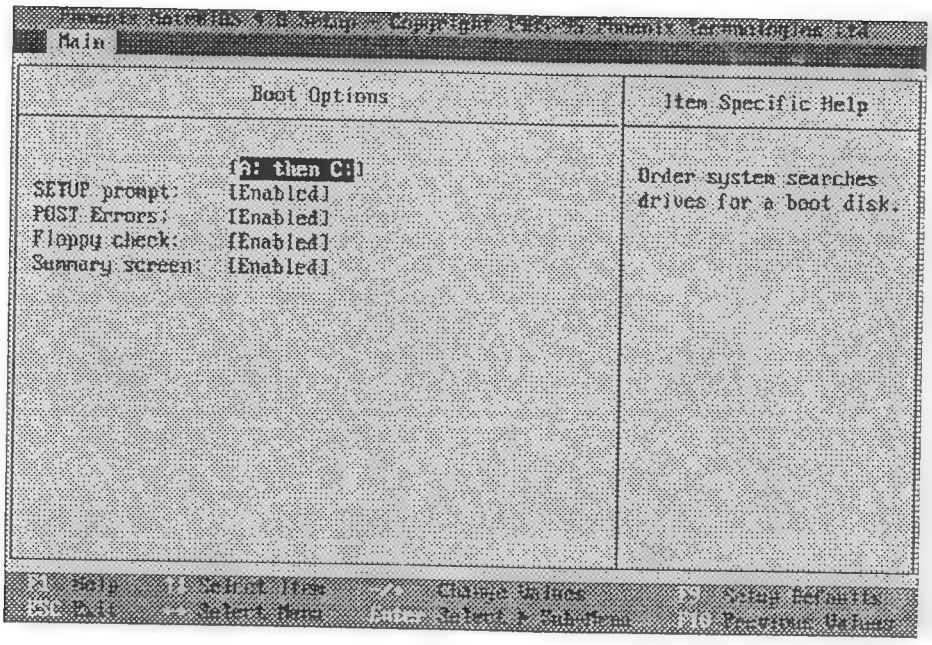
Main
Boot Options
Item Specific Help
[A: then C:]
SETUP prompt: [Enabled]
POST Errors: [Enabled]
Floppy check: [Enabled]
Summary screen: [Enabled]
Order system searches drives for a boot disk.

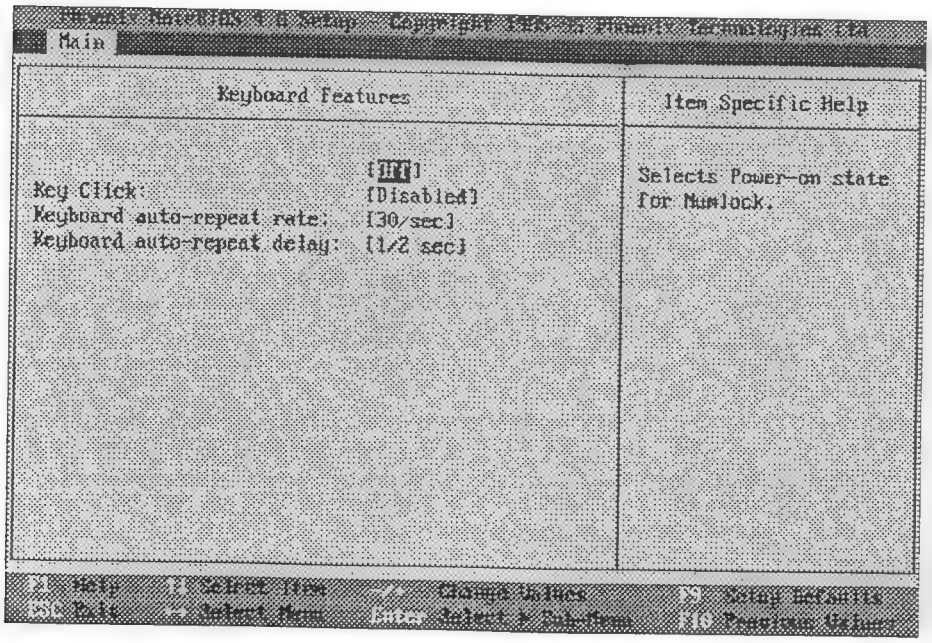
Main
Keyboard Features
Item Specific Help
[Off]
Key Click: [Disabled]
Keyboard auto-repeat rate: [30/sec]
Keyboard auto-repeat delay: [1/2 sec]
Selects Power-on state for Numlock.

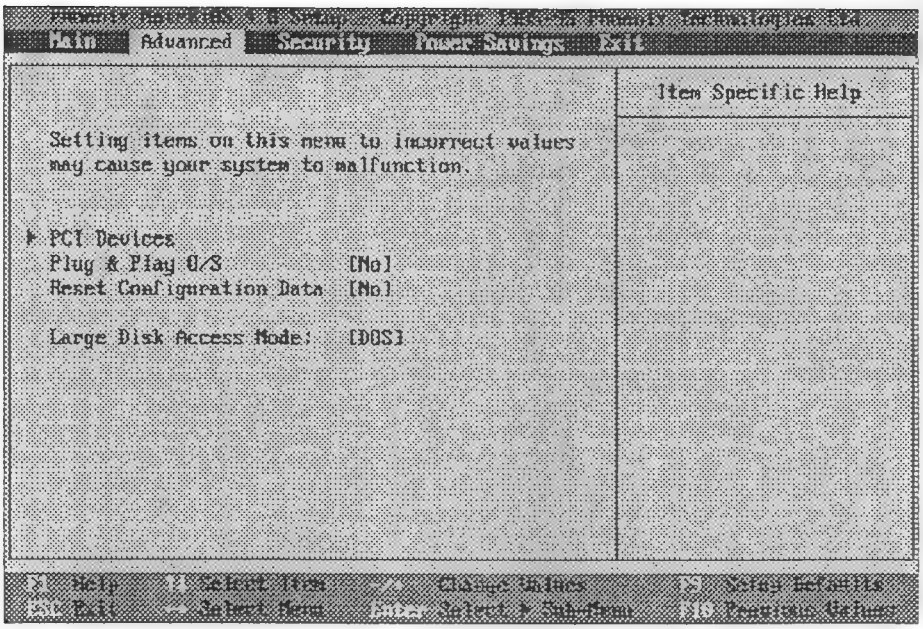
Main
Advanced
Security
Power Savings
Exit
Item Specific Help
Setting items on this menu to incorrect values may cause your system to malfunction.
PCI Devices
Plug & Play O/S [No]
Reset Configuration Data [No]
Large Disk Access Mode: [DOS]
F1 Help
Select Item
Change Values
F9 Setup Defaults
Esc Exit
Select Menu
Enter Select ▸ Sub-Menu
F10 Previous Values

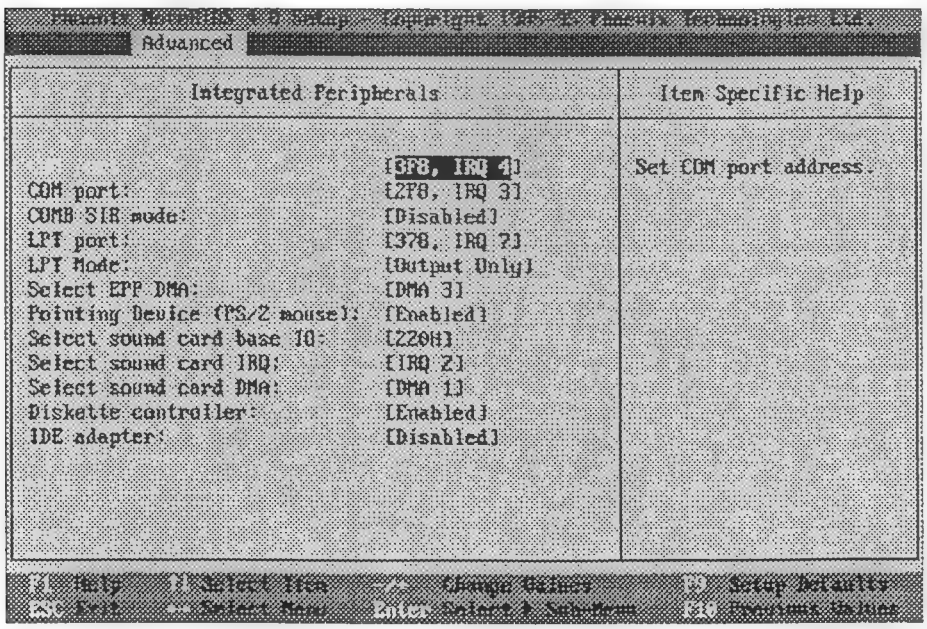
Advanced
Integrated Peripherals
Item Specific Help
[3F8, IRQ 4]
Set COM port address.
COM port: [2F8, IRQ 3]
COMB SIR mode: [Disabled]
LPT port: [378, IRQ 7]
LPT Mode: [Output Only]
Select EPP DMA: [DMA 3]
Pointing Device (PS/2 mouse): [Enabled]
Select sound card base IO: [220H]
Select sound card IRQ: [IRQ 2]
Select sound card DMA: [DMA 1]
Diskette controller: [Enabled]
IDE adapter: [Disabled]
F1 Help
Select Item
Change Values
F9 Setup Defaults
Esc Exit
Select Menu
Enter Select ▸ Sub-Menu
F10 Previous Values

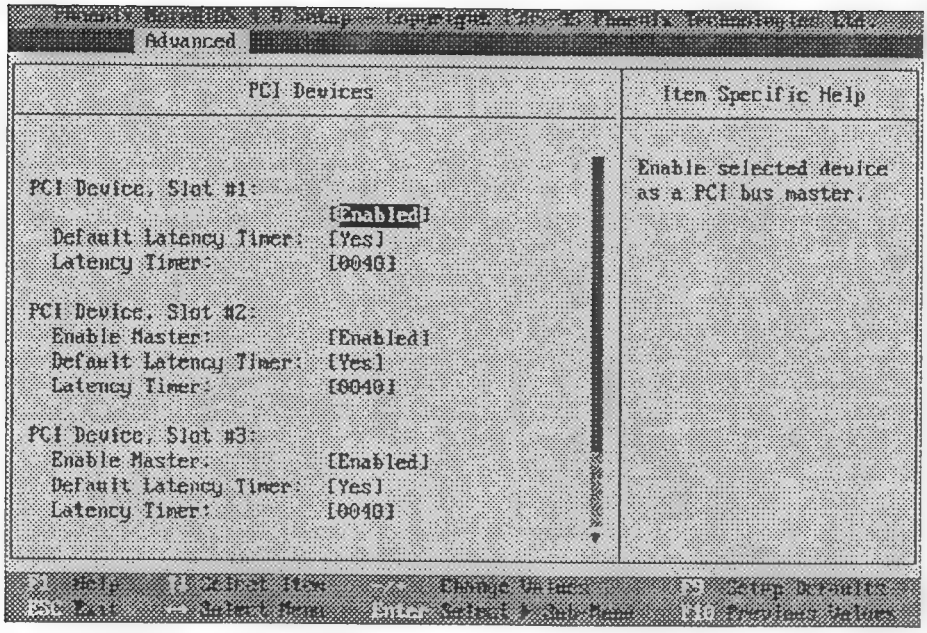
Advanced
PCI Devices
Item Specific Help
Enable selected device as a PCI bus master.
PCI Device, Slot #1:
[Enabled]
Default Latency Timer: [Yes]
Latency Timer: [0040]
PCI Device, Slot #2:
Enable Master: [Enabled]
Default Latency Timer: [Yes]
Latency Timer: [0040]
PCI Device, Slot #3:
Enable Master: [Enabled]
Default Latency Timer: [Yes]
Latency Timer: [0040]

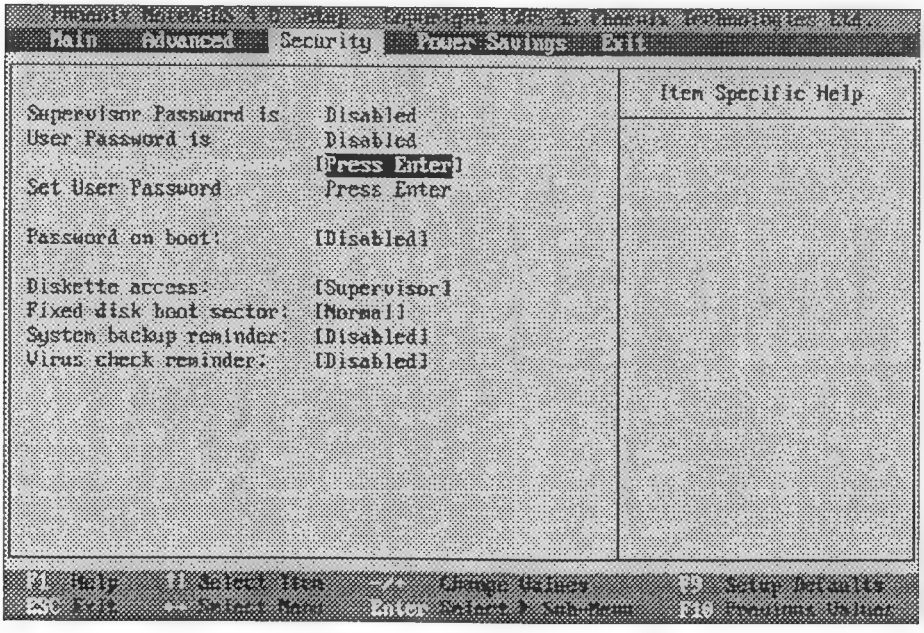
Main Advanced Security Power Savings Exit
Item Specific Help
Supervisor Password is Disabled
User Password is Disabled
[Press Enter]
Set User Password Press Enter
Password on boot: [Disabled]
Diskette access: [Supervisor]
Fixed disk boot sector: [Normal]
System backup reminder: [Disabled]
Virus check reminder: [Disabled]

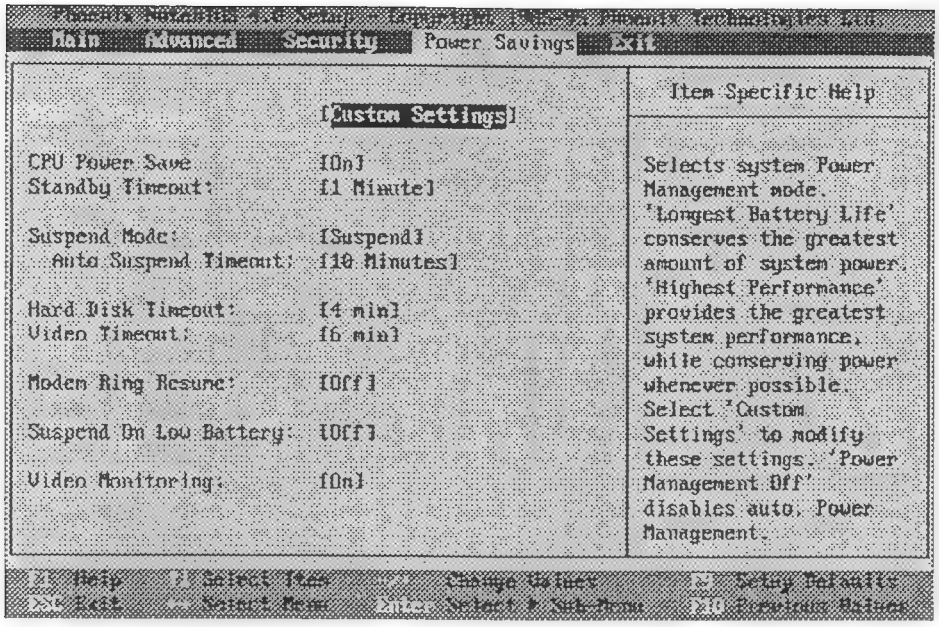
Main Advanced Security Power Savings Exit
[Custom Settings]
CPU Power Save [On]
Standby Timeout: [1 Minute]
Suspend Mode: [Suspend]
Auto Suspend Timeout: [10 Minutes]
Hard Disk Timeout: [4 min]
Video Timeout: [6 min]
Modem Ring Resume: [Off]
Suspend On Low Battery: [Off]
Video Monitoring: [On]
Item Specific Help
Selects system Power Management mode. 'Longest Battery Life' conserves the greatest amount of system power. 'Highest Performance' provides the greatest system performance, while conserving power whenever possible. Select 'Custom Settings' to modify these settings. 'Power Management Off' disables auto. Power Management.
F1 Help ↑↓ Select Item -/+ Change Values F5 Setup Defaults
Esc Exit ↔ Select Menu Enter Select ▸ Sub-Menu F10 Previous Values

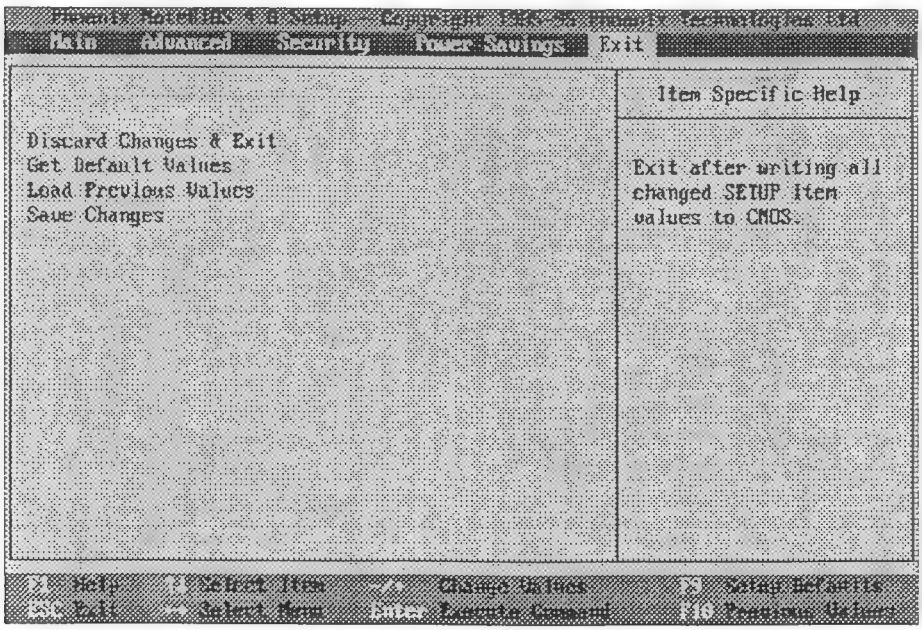
Main Advanced Security Power Savings Exit
Discard Changes & Exit
Get Default Values
Load Previous Values
Save Changes
Item Specific Help
Exit after writing all changed SETUP item values to CMOS.
F1 Help ↑↓ Select Item -/+ Change Values F5 Setup Defaults
Esc Exit ↔ Select Menu Enter Execute Command F10 Previous Values

# POST Errors

## A. Recoverable POST Errors

Whenever a recoverable error occurs during POST, *PhoenixBIOS* displays an error message describing the problem.

*PhoenixBIOS* also issues a beep code (one long tone followed by two short tones) during POST if the video configuration fails (no card installed or faulty) or if an external ROM module does not properly checksum to zero.

An external ROM module (e.g. VGA) can also issue audible errors, usually consisting of one long tone followed by a series of short tones.

## B. Terminal POST Errors

There are several POST routines that issue a POST Terminal Error and shut down the system if they fail. Before shutting down the system, the terminal-error handler issues a beep code signifying the test point error, writes the error to port 80h, attempts to initialize the video, and writes the error in the upper left corner of the screen (using both mono and color adapters).

The routine derives the beep code from the test point error as follows:

1. The 8-bit error code is broken down to four 2-bit groups.
2. Each group is made one-based (1 through 4) by adding 1.
3. Short beeps are generated for the number in each group.

Example:

Testpoint 01Ah = 00 01 10 10 = 1-2-3-3 beeps

If the BIOS detects error 2C, 2E, or 30 (base 512k RAM error), it displays an additional word of information reflecting the bit or address line that failed. For example, if "2C 0002" is displayed, address line 1 (represented by bit one) has failed. If "2E 1020" is displayed, then data bits 12 and 5 have failed in the upper 16 bits.

BIOS sends the same information to the port-80 LED display (See below). The check point code is followed by a delay, the high order byte, another delay, and then the low order byte of the error. This

# C. Test Points and Beep Codes

At the beginning of each POST routine, the BIOS outputs the test point error code to I/O address 80h. Use this code during trouble shooting to establish at what point the system failed and what routine was being performed.

Some motherboards are equipped with a seven-segment LED display that displays the current value of port 80h. For production boards which do not contain the LED display, you can purchase a card that performs the same function.

If the BIOS detects a terminal error condition, it halts POST after issuing a terminal error beep code (See above) and attempting to display the error code on upper left corner of the screen and on the port 80h LED display. It attempts repeatedly to write the error to the screen. This may cause "hash" on some CGA displays.

If the system hangs before the BIOS can process the error, the value displayed at the port 80h is the last test performed. In this case, the screen does not display the error code.

The following is a list of the checkpoint codes written at the start of each test and the beep codes issued for terminal errors:

| Code | Beeps | POST Routine Description |
|---|---|---|
| 02 | 10 | **Verify Real Mode** |
| 04 | 100 | **Get CPU type** |
| 06 | | **Initialize system hardware** |
| 08 | | **Initialize chipset registers with initial POST values** |
| 09 | | **Set in POST flag** |
| 0A | | **Initialize CPU registers** |
| 0C | | **Initialize cache to initial POST values** |

| | | |
|---|---|---|
| 0E | | Initialize I/O |
| 0F | | Initialize the local bus IDE |
| 10 | | Initialize Power Management |
| 11 | | Load alternate registers with initial POST valuesnew |
| 12 | | Jump to UserPatch0 |
| 14 | | Initialize keyboard controller |
| 16 | 2-2-3 | BIOS ROM checksum |
| 18 | | 8254 timer initialization |
| 1A | | 8237 DMA controller initialization |
| 1C | | Reset Programmable Interrupt Controller |
| 20 | 3-1-1 | Test DRAM refresh |
| 22 | 3-1-3 | Test 8742 Keyboard Controller |
| 24 | | Set ES segment register to 4 GB |
| 28 | | Autosize DRAM |
| 2A | | Clear 512K base RAM |
| 2C | 3-4-1 | Test 512K base address lines |
| 2E | 3-4-3 | Test 512K base memory |
| 32 | | Test CPU bus-clock frequency |
| 34 | | Test CMOS RAM |
| 35 | | Initialize other hardware devices. |
| 37 | | Reinitialize the chipset (MB only) |
| 38 | | Shadow system BIOS ROM |

| | | |
|---|---|---|
| 39 | | Reinitialize the cache (MB only) |
| 3A | | Autosize cache |
| 3C | | Configure advanced chipset registers |
| 3D | | Load alternate registers with CMOS valuesnew |
| 40 | | Set Initial CPU speed new |
| 42 | | Initialize interrupt vectors |
| 44 | | Initialize BIOS interrupts |
| 46 | 2-1-2-3 | Check ROM copyright notice |
| 47 | | Initialize manager for PCI Option ROMs |
| 48 | | Check video configuration against CMOS |
| 49 | | Initialize PCI bus and devices |
| 4A | | Initialize all video adapters in system |
| 4C | | Shadow video BIOS ROM |
| 4E | | Display copyright notice |
| 50 | | Display CPU type and speed |
| 51 | | Initialize EISA slots |
| 52 | | Test keyboard |
| 54 | | Set key click if enabled |
| 56 | | Enable keyboard |
| 58 | 2-2-3-1 | Test for unexpected interrupts |
| 5A | | Display prompt "Press F2 to enter SETUP" |

| | | |
|---|---|---|
| 5C | | Test RAM between 512 and 640k |
| 60 | | Test extended memory |
| 62 | | Test extended memory address lines |
| 64 | | Jump to UserPatch1 |
| 66 | | Configure advanced cache registers |
| 68 | | Enable external and CPU caches |
| 6A | | Display external cache size |
| 6C | | Display shadow message |
| 6E | | Display non-disposable segments |
| 70 | | Display error messages |
| 72 | | Check for configuration errors |
| 74 | | Test real-time clock |
| 76 | | Check for keyboard errors |
| 7C | | Set up hardware interrupt vectors |
| 7E | | Test coprocessor if present |
| 80 | | Disable onboard I/O ports. |
| 82 | | Detect and install external RS232 ports |
| 84 | | Detect and install external parallel ports |
| 86 | | Re-initialize onboard I/O ports. |
| 88 | | Initialize BIOS Data Area |
| 8A | | Initialize Extended BIOS Data Area |
| 8C | | Initialize floppy controller |
| 90 | | Initialize hard-disk drives |

| | | |
|---|---|---|
| 91 | | Local-bus IDE timing |
| 92 | | Jump to UserPatch2 |
| 93 | | Build MPTABLE for multi-processor boards |
| 94 | | Disable A20 address line |
| 96 | | Clear huge ES segment register |
| 98 | | Search for option ROMs |
| 9A | | Shadow option ROMs |
| 9C | | Set up Power Management |
| 9E | | Enable hardware interrupts |
| A0 | | Set time of day |
| A2 | | Check key lock |
| A4 | | Initialize typematic rate |
| A8 | | Erase F2 prompt |
| AA | | Scan for F2 key stroke |
| AC | | Enter SETUP |
| AE | | Clear in-POST flag |
| B0 | | Check for errors |
| B2 | | POST done - prepare to boot operating system |
| B4 | | One beep |
| B6 | | Check password (optional) |
| B8 | | Clear global descriptor table |
| BC | | Clear parity checkers |

| | | |
|---|---|---|
| BE | | Clear screen (optional) |
| BF | | Check virus and backup reminders |
| C0 | | Try to boot with INT 19 |
| DO | | Interrupt handler error |
| D2 | | Unknown interrupt error |
| D4 | | Pending interrupt error |
| D6 | | Initialize option ROM error |
| D8 | | Shutdown error |
| DA | | Extended Block Move |
| DC | | Shutdown 10 error |
| | | The following are for boot block in Flash ROM |
| E2 | | Initialize the chipset |
| E3 | | Initialize refresh counter |
| E4 | | Check for Forced Flash |
| E5 | | Check HW status of ROM |
| E6 | | BIOS ROM is OK |
| E7 | | Do a complete RAM test |
| E8 | | Do OEM initialization |
| E9 | | Initialize interrupt controller |
| EA | | Read in the bootstrap code |
| EB | | Initialize all vectors |
| EC | | Boot the Flash program |
| ED | | Initialize the boot device |
| EE | | Boot code was read OK |

# D. PhoenixBIOS Messages

*nnnn* Cache SRAM Passed
Diskette drive A error
Diskette drive B error
Entering SETUP...
Extended RAM Failed at offset: *nnnn* *
Extended RAM Passed
Failing Bits: *nnnn* *
Fixed Disk 0 Failure
Fixed Disk 1 Failure
Fixed Disk Controller Failure *
Incorrect Drive A type - run SETUP
Incorrect Drive B type - run SETUP
Invalid NVRAM media type *
Keyboard controller error *
Keyboard error
Keyboard locked - Unlocked key switch
Monitor type does not match CMOS - Run SETUP
Operating system not found
Parity Check 1 nnnn *
Parity Check 2 nnnn *
Press <F1> to resume, <F2> to Setup
Press <F2> to enter SETUP
Real time clock error *
Shadow Ram Failed at offset: *nnnn* *
*nnnn* Shadow RAM Passed
System battery is dead - Replace and run SETUP
System BIOS shadowed
System cache error - Cache disabled *
System CMOS checksum bad - run SETUP
System RAM Failed at offset: *nnnn* *
nnnn System RAM Passed
System timer error *
UMB upper limit segment address: *nnnn*
Video BIOS shadowed

* If your system displays this message, write down the message and contact your dealer.
If your system fails after you made changes in the Setup menus, you may be able to correct the the problem by entering Setup and restoring the original values.
The following is an explanation of each of the messages listed above.

*nnnn* Cache SRAM Passed Where *nnnn* is the amount of system cache in kilobytes successfully tested.

**Diskette drive A error or**
**Diskette drive B error** Drive A: or B: is present but fails the BIOS POST diskette test. Check to see that the drive is defined with proper diskette type in Setup and that the diskette drive is attatched correctly.

**Entering SETUP...** Starting Setup program

**Extended RAM Failed at offset: *nnnn*** Extended memory not working or not configured properly at offset ***nnnn.***

***nnnn* Extended RAM Passed** Where ***nnnn*** is the amount of RAM in kilobytes successfully tested.

**Failing Bits: *nnnn*** The hex number ***nnnn*** is a map of the bits at the RAM address (in System, Extended, or Shadow memory) which failed the memory test. Each 1 (one) in the map indicates a failed bit.

**Fixed Disk 0 Failure or**
**Fixed Disk 1 Failure or**
**Fixed Disk Controller Failure** Fixed disk is not working or not configured properly. Check to see if fixed disk is attached properly. Run Setup be sure tha fixed-disk type is correctly identified.

**Incorrect Drive A type - run SETUP** Type of floppy drive A: not correctly identified in Setup.

**Incorrect Drive B type - run SETUP** Type of floppy drive B: not correctly identified in Setup.

**Invalid NVRAM media type** Problem with NVRAM (CMOS) access.

**Keyboard controller error** The keyboard controller failed test. You may have to replace keyboard or controller.

**Keyboard error** Keyboard not working.

**Keyboard error *nn*** BIOS discovered a stuck key and displays the scan code nn for the stuck key.

**Keyboard locked - Unlocked key switch** Unlocked the system to proceed.

**Monitor type does not match CMOS - Run SETUP** Monitor type not correctly identified in Setup.

**Operating system not found** Operating system cannot be located on either drive A: or drive C:. Enter Setup and see if fixed disk and drive A: are porperly identified.

**Parity Check 1** Parity error found in the system bus. BIOS attempts to locate the address and display it on the screen. If it cannot locate the address, it displays ????

**Parity Check 2** Parity error found in the I/O bus. BIOS attempts to locate the address and display it on the screen. If if cannot locate the address, it displays ????

**Press <F1> to resume, <F2> to Setup** Displayed after any recoverable error messages. Press <F1> to start the boot process or <F2> to enter Setup and change any settings.

**Press <F2> to enter SETUP** Optional message displayed during POST. Can be turned off in Setup.

**Previous boot incomplete - Default configuration used** Previous POST did not complete successfully. POST loads default values and offers to run Setup. If the failure was caused by incorrect values and they are not corrected, the next boot will likely fail. On systems with control of wait states, improper Setup settings can also terminate POST and cause this error on the next boot. Run Setup and verify that wait-state configuration is correct. This error is cleared the next time the system is booted.

**Real time clock error** Real-time clock fails BIOS test. May require board repair.

**Shadow Ram Failed at offset: *nnnn*** Shadow RAM failed at offset *nnnn* of the 64k block at which the error was detected.

***nnnn*** Shadow RAM Passed Where *nnnn* is the amount of shadow RAM in kilobytes successfully tested.

**System battery is dead - Replace and run SETUP** The CMOS clock battery indicator shows the battery is dead. Replace the battery and run Setup to reconfigure the system.

**System BIOS shadowed** System BIOS copied to shadow RAM.

**Syatem cache error - Cache disabled** RAM cache failed the BIOS test. BIOS disabled the cache.

**System CMOS checksum bad -run SETUP** System CMOS has been corrupted or modified incorrectly, perhaps by an application program that changes data stored in CMOS. Run Setup and reconfigure the system either by getting the Default Values and/or making your own selections.

**System RAM Failed at offset: *nnnn*** System RAM failed at offset *nnnn* of in the 64k block at which the error was detected.

***nnnn* System RAM Passed** Where *nnnn* is the amount of system RAM in kilobytes successfully tested.

**System timer error** The timer test failed. Requires repair of system board.

**UMB upper limit segment address: *nnnn*** Displays the address *nnnn* of the upper limit os Upper Memory Blocks, indicating released segments of the BIOS which may be reclaimed by a virtual memory manager.

**Video BIOS shadowed** Video BIOS successfully copied to shadow RAM.

| | | |
|---|---|---|
| 133 | ON ON OFF ON | Vcc |
| 150 | OFF OFF ON OFF | ON OFF OFF OFF |
| 166 | ON ON ON ON | |
| 200 | ON ON ON OFF | |

| SW1 | SW2 | SW3 | |
|---|---|---|---|
| 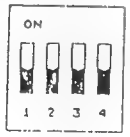 | 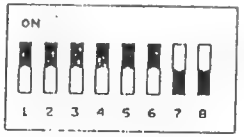 | 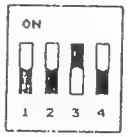 | Intel<br>P54C<br>75MHz<br>3.3V |
| 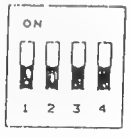 | 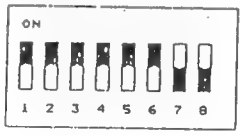 | 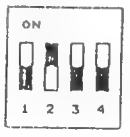 | Intel<br>P54LM<br>75MHz<br>2.9V |
| 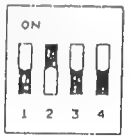 | 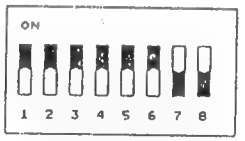 | 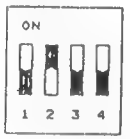 | Intel<br>P54LM<br>90MHz<br>2.9V |
| 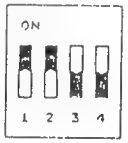 | 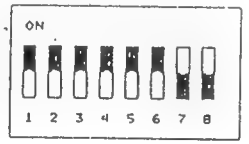 | 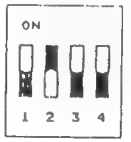 | Intel<br>P54LM<br>100MHz<br>2.9V |

件管子中心參
84.12.13
發行章

NOTE:

1. = Set to UP (ON) position.

   = Set to DOWN (OFF) position.

PCB:

1. KK101002
2. KK101003
3. KK101004

| Approved by | Checked by | Designed by |
|---|---|---|
| | | |

ALPHA-TOP CORP.
6F, NO. 80, SEC 2, ANN-HO RD.,
TAIPEI, TAIWAN, R.O.C.

Title: GREEN753 M/B CPU SELECTION SWITCH SETTING

| Size | Document Number | REV |
|---|---|---|
| B | G753H0101 | 00 |

Date: December 13, 1995 Sheet 1 of 1

PAGE 1 : THIS PAGE
PAGE 2 : CPU-1 (SPGA)
PAGE 3 : CPU-2 (SPGA)
PAGE 4 : OPTI 82C558N
PAGE 5 : OPTI 82C557
PAGE 6 : 32K X 32 SRAM
PAGE 7 : OPTI 82C556 , GPIO PORT
PAGE 8 : OPTI 82C602A , HDD , CDROM CONN.
PAGE 9 : DAMPING RESISTOR
PAGE 10: DRAM , DIM SOCKET
PAGE 11: VGA CIRRUS 7543
PAGE 12: VGA DISPLAY MEMORY
PAGE 13: LCDI INTERFACE,EXTERNAL CRT PORT
PAGE 14: LCDI INTERFACE CONNECTOR , SOUND JACK
PAGE 15: SUPER I/O SMC37C665IR ,SIR CONN. , FDD CONN.
PAGE 16: SERIAL , PARALLEL PORT INTERFACE ,TV PORT
PAGE 17: PCMCIA MODULE CONN. VDD , LCMVCC
PAGE 18: SOUND ESS1788
PAGE 19: SOUND AMP. GAME PORT
PAGE 20: SYSTEM BIOS
PAGE 21: SPK.AMP.
PAGE 22: MICRO P. M37450M2
PAGE 23: K.B. CONTROLER M38802M2 , EXT. K.B. CONN.
PAGE 24: CLOCK GENERATOR
PAGE 25: SW. BYPASS , BULK CAPS
PAGE 26: DOCKING CONN.
PAGE 27: POWER ON BOARD-1
PAGE 28: POWER ON BOARD-2
PAGE 29: POWER ON BOARD-3
PAGE 30: POWER ON BOARD-4
PAGE 31: HISTERY

PCB PART NO. KK101004

| Approved by | Checked by | Designed by |
|---|---|---|
| | 1/17/96 | |

| | | |
|---|---|---|
| ALPHA TOP | | |
| Title: COVER PAGE | | |
| Size: B | Document Number: G753H0039 | REV: 04 |
| Date: January 9, 1996 | Sheet 1 of 31 | |

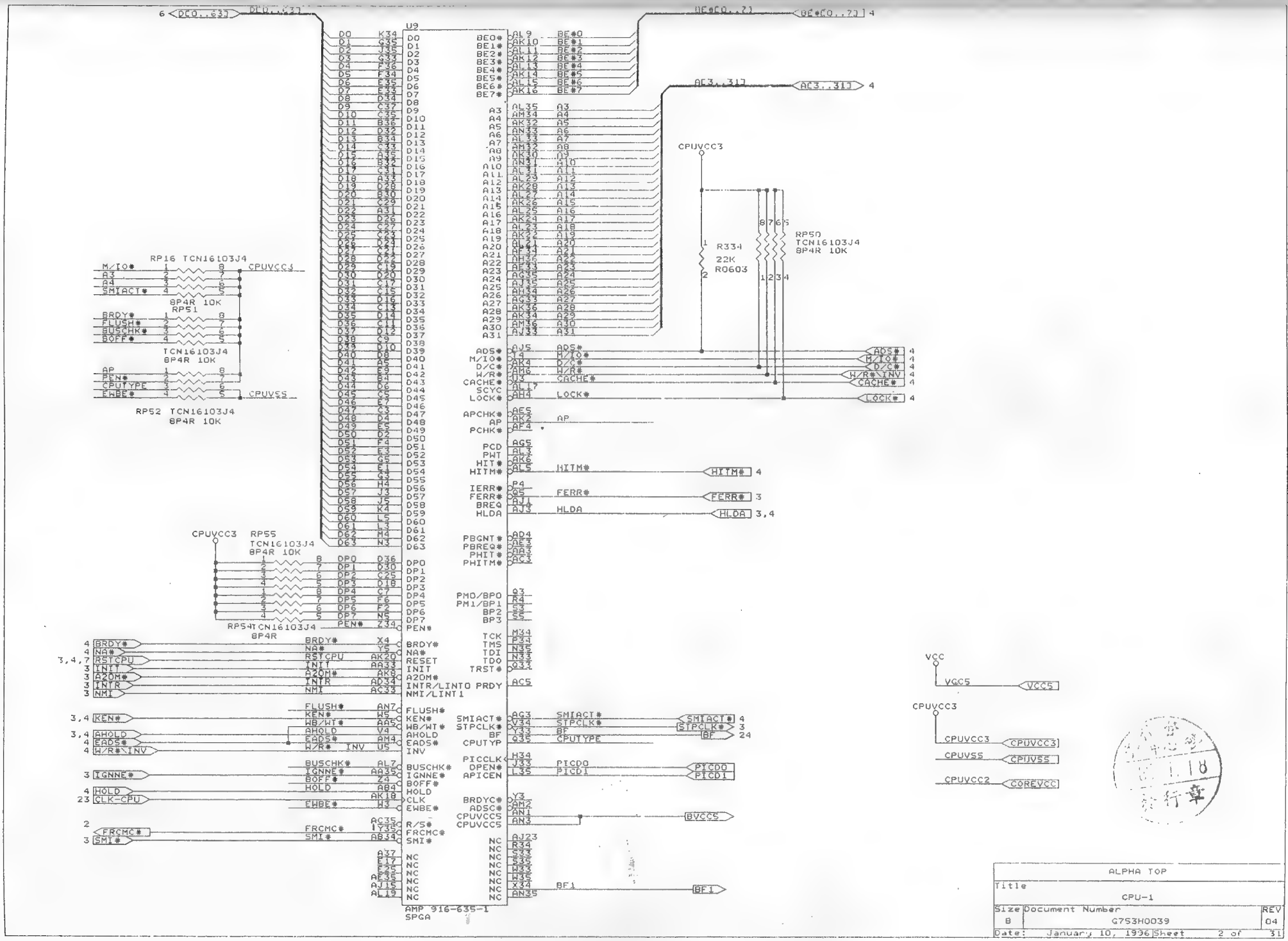
U9
AMP 916-635-1
SPGA
RP16 TCN16103J4
8P4R 10K
RP51
TCN16103J4
8P4R 10K
RP52 TCN16103J4
8P4R 10K
RP55
TCN16103J4
8P4R 10K
RP54 TCN16103J4
8P4R
CPUVCC3
CPUVSS
R334
22K
R0603
RP50
TCN16103J4
8P4R 10K
VCC
VCC5
CPUVCC2
COREVCC
ALPHA TOP
Title
CPU-1
Size
B
Document Number
G753H0039
REV
04
Date: January 10, 1996
Sheet 2 of 31

CPUVCC2 : 2.9V

CPUVCC3 : 3.3V

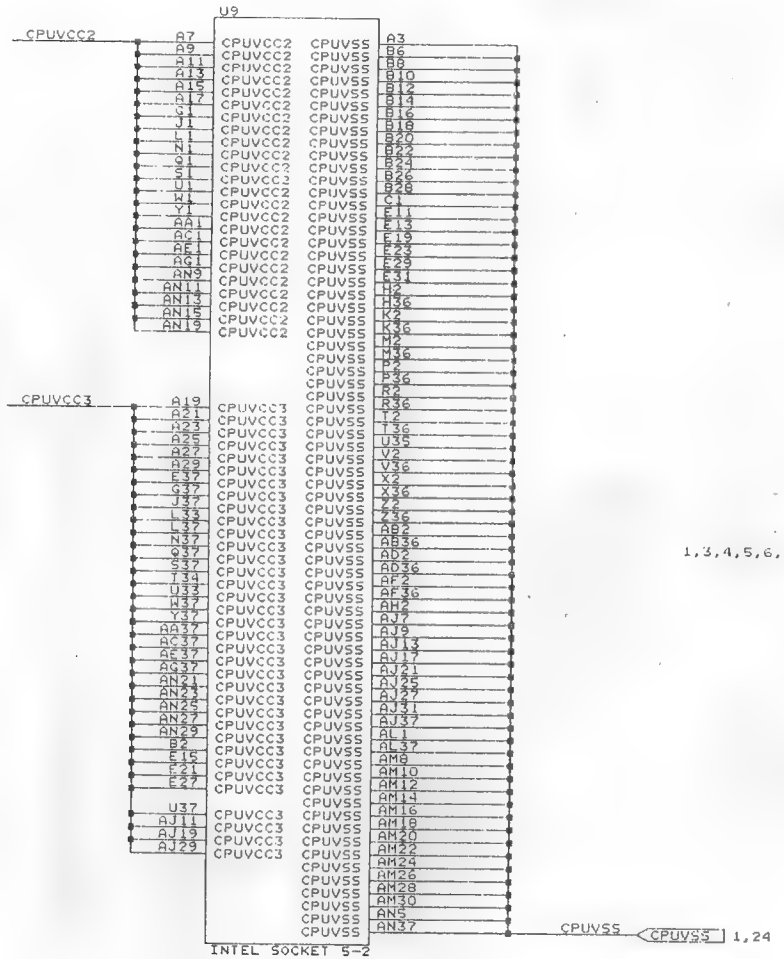


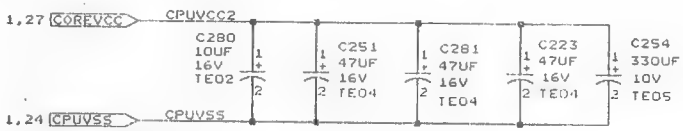


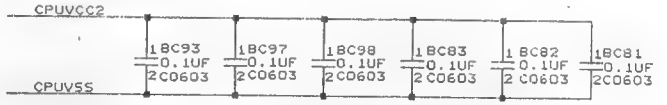


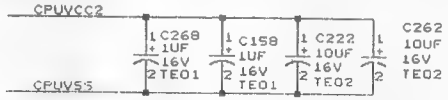


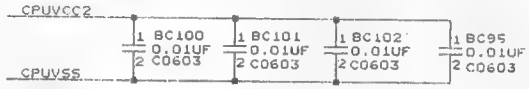


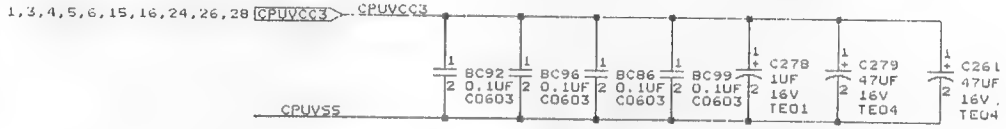


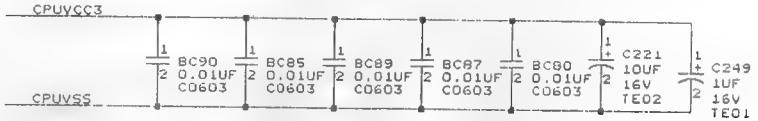


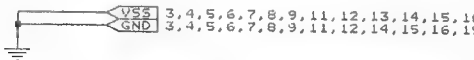


| | | |
|---|---|---|
| | ALPHA TOP | |
| Title | CPU-2 | |
| Size B | Document Number G753H0039 | REV 04 |
| Date: January 9, 1996 | Sheet 3 of 31 | |

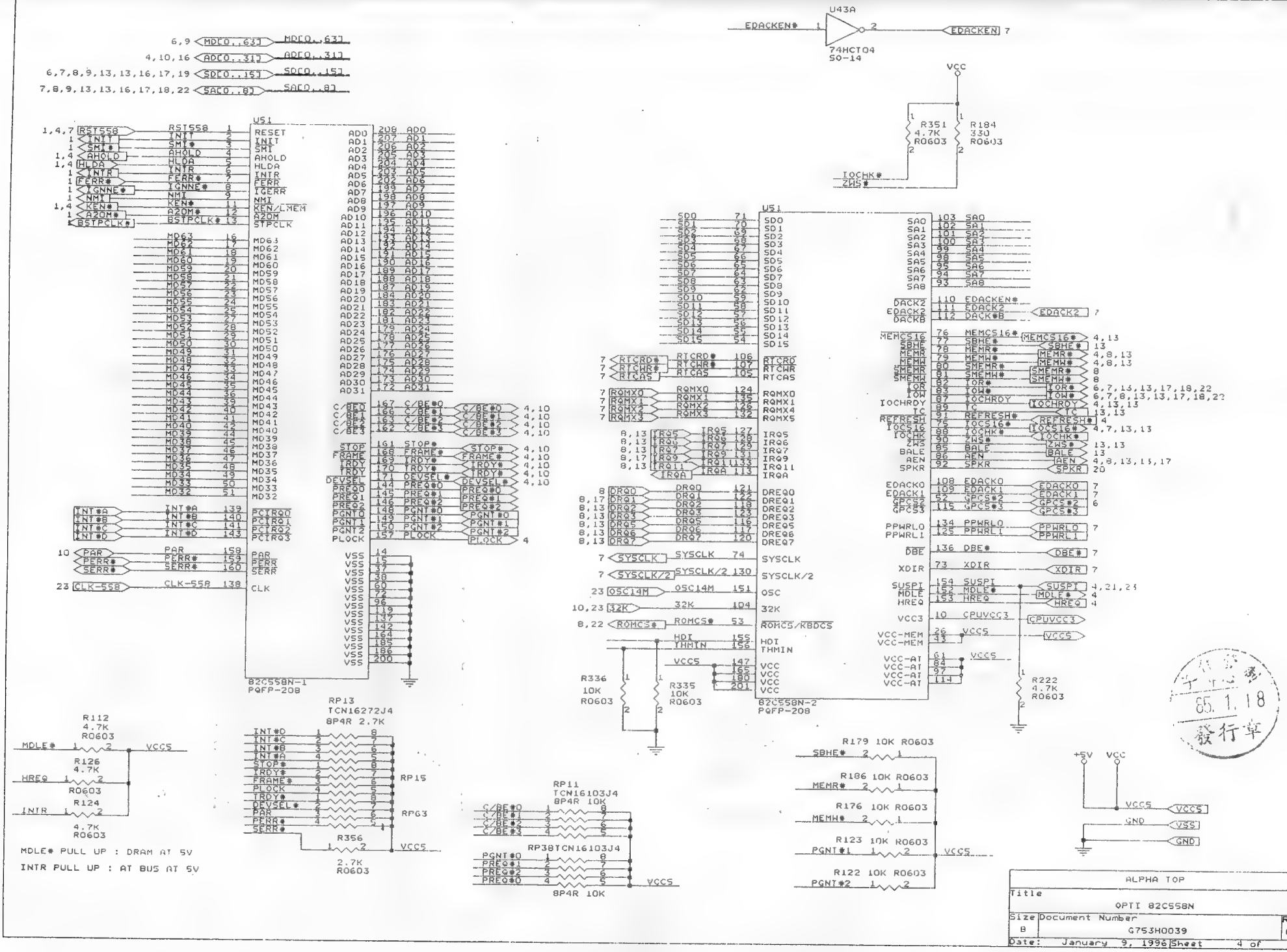
U43A
74HCT04
SO-14
EDACKEN*
EDACKEN
VCC
R351
4.7K
R0603
R184
330
R0603
IOCHK*
ZWS*
U51
82C558N-1
PQFP-208
U51
82C558N-2
PQFP-208
RP13
TCN16272J4
8P4R 2.7K
RP15
RP63
R356
2.7K
R0603
RP11
TCN16103J4
8P4R 10K
RP38TCN16103J4
8P4R 10K
R112
4.7K
R0603
R126
4.7K
R0603
R124
4.7K
R0603
MDLE* PULL UP : DRAM AT 5V
INTR PULL UP : AT BUS AT 5V
R336
10K
R0603
R335
10K
R0603
R222
4.7K
R0603
R179 10K R0603
R186 10K R0603
R176 10K R0603
R123 10K R0603
R122 10K R0603
+5V
VCC
GND
VSS
65.1.18
發行章
ALPHA TOP
Title
OPTI 82C558N
Size B
Document Number G753H0039
REV 04
Date: January 9, 1996
Sheet 4 of 31

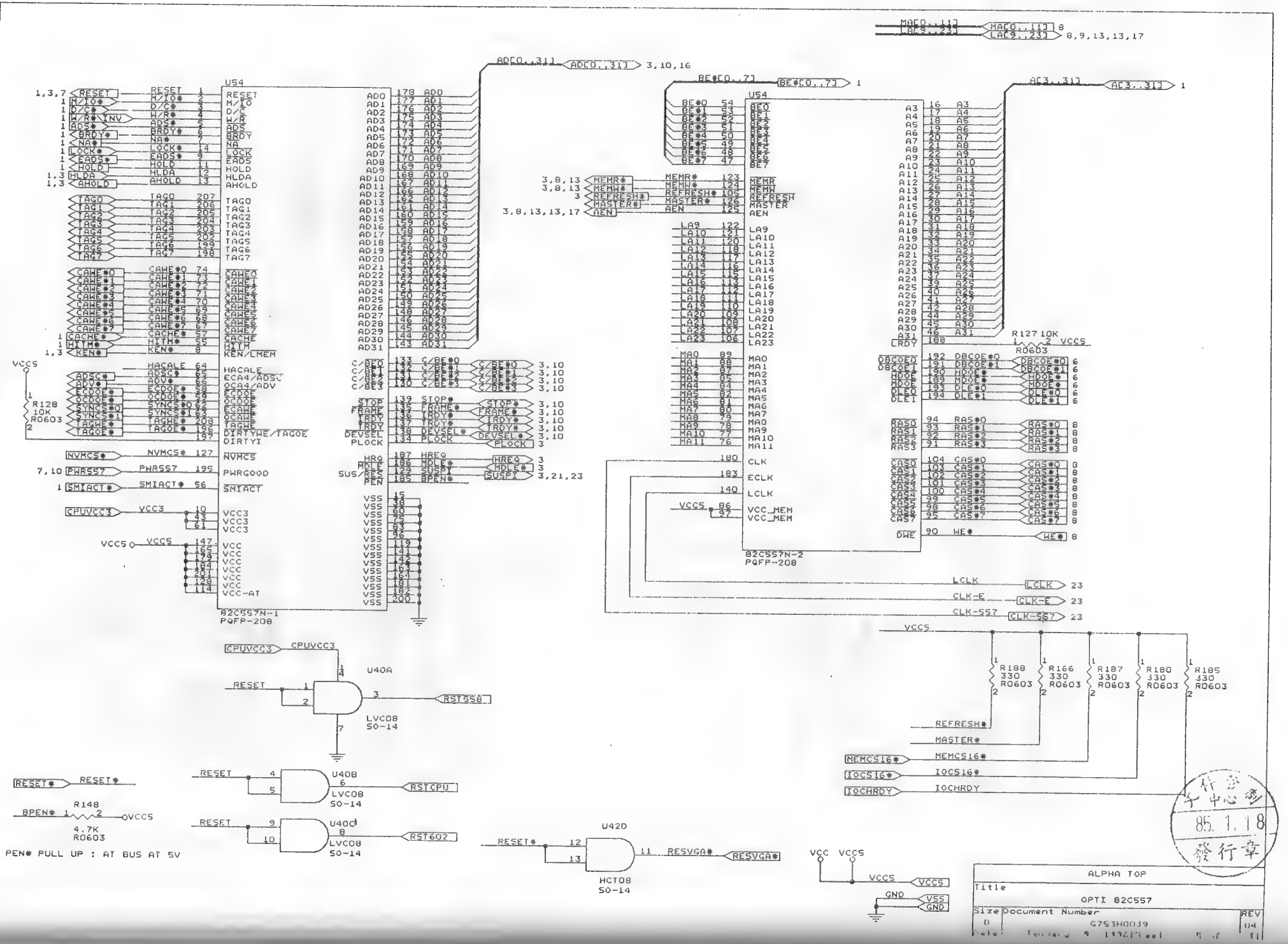
U54
82C557N-1
PQFP-208
U54
82C557N-2
PQFP-208
U40A
LVC08
SO-14
U40B
LVC08
SO-14
U40D
LVC08
SO-14
U42D
HCT08
SO-14
R128 10K R0603
R148 4.7K R0603
R188 330 R0603
R166 330 R0603
R187 330 R0603
R180 330 R0603
R185 330 R0603
R127 10K R0603
PEN# PULL UP : AT BUS AT 5V
ALPHA TOP
OPTI 82C557
G753H0039
85.1.18
發行章

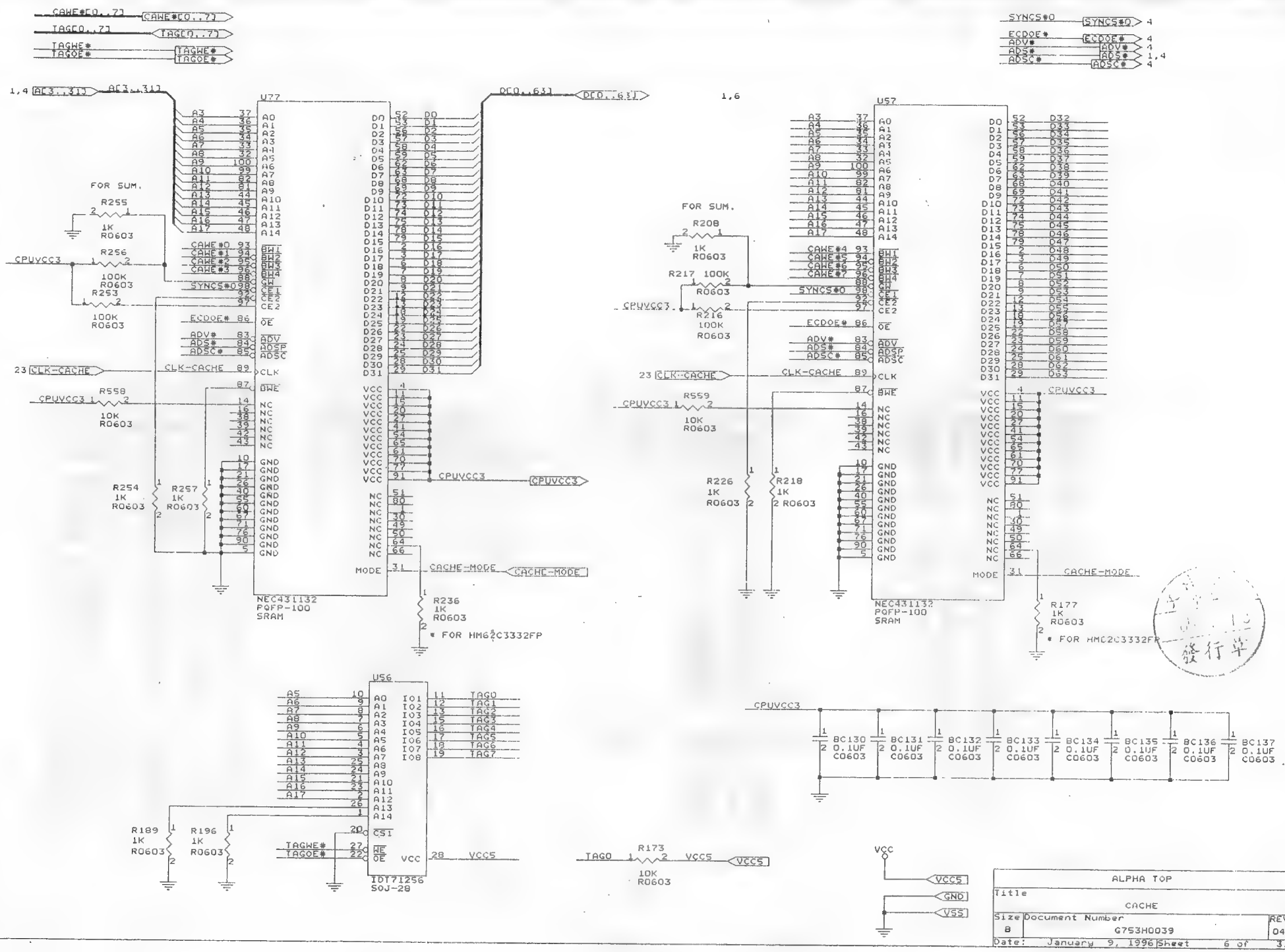
CAWE*[0..7]
TAGE[0..7]
TAGWE*
TAGOE*
SYNCS*0
ECDOE*
ADV*
ADS*
ADSC*
U77
U57
U56
NEC431132
PQFP-100
SRAM
IDT71256
SOJ-28
FOR SUM.
R255
R256
R253
R254
R257
R558
R559
R208
R217
R216
R226
R218
R236
R177
R189
R196
R173
CPUVCC3
CLK-CACHE
CACHE-MODE
* FOR HM62C3332FP
BC130 0.1UF C0603
BC131 0.1UF C0603
BC132 0.1UF C0603
BC133 0.1UF C0603
BC134 0.1UF C0603
BC135 0.1UF C0603
BC136 0.1UF C0603
BC137 0.1UF C0603
VCC5
GND
VSS
ALPHA TOP
CACHE
G753H0039
January 9, 1996
6 of 31

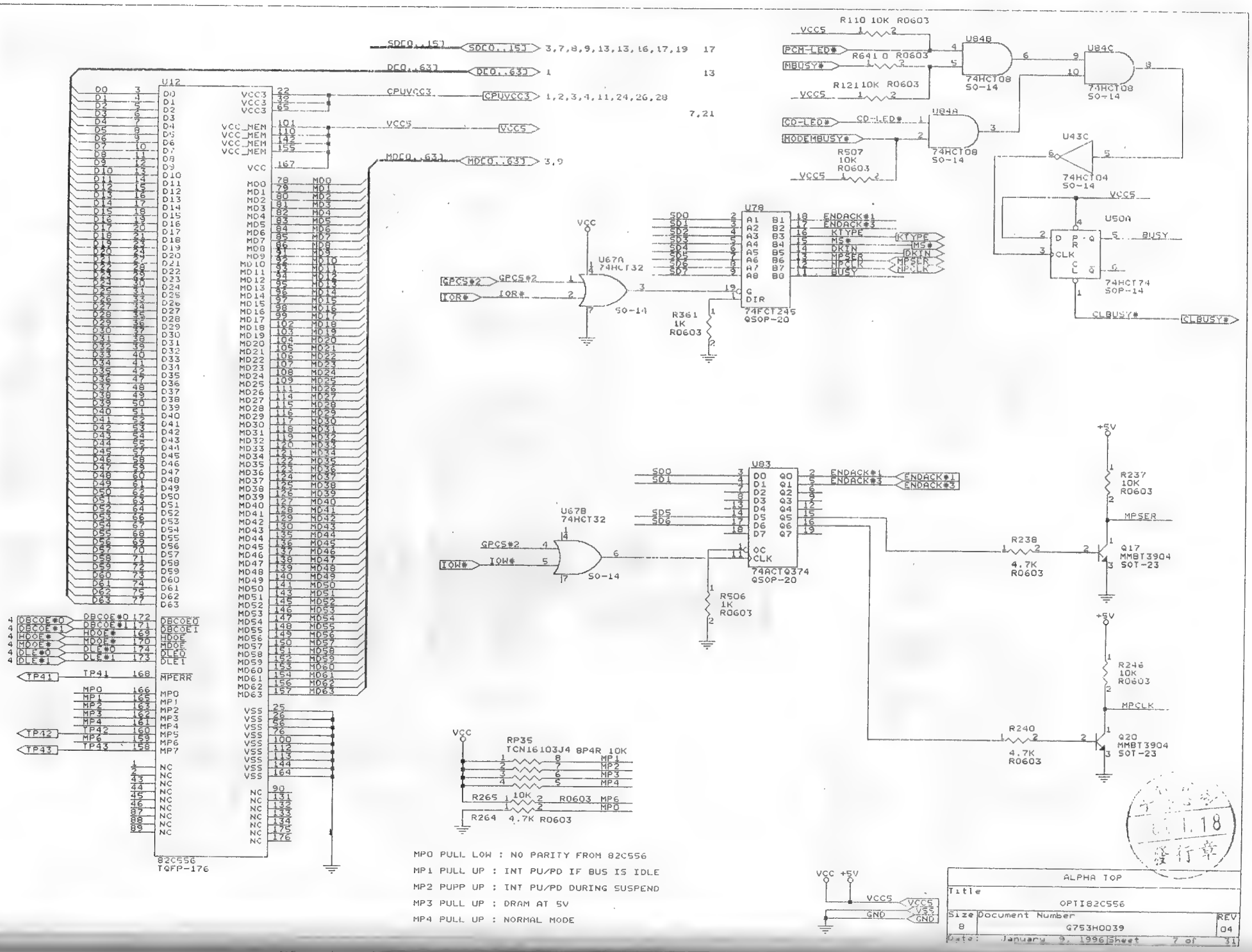
U12
82C556
TQFP-176
SDC0..15]
DC0..63]
CPUVCC3
VCC5
MDC0..63]
U67A
74HCT32
U67B
74HCT32
U78
74FCT245
QSOP-20
U83
74ACTQ374
QSOP-20
U84B
74HCT08
SO-14
U84C
74HCT08
SO-14
U84A
74HCT08
SO-14
U43C
74HCT04
SO-14
U50A
74HCT74
SOP-14
RP35
TCN16103J4 8P4R 10K
R110 10K R0603
R641 0 R0603
R121 10K R0603
R507 10K R0603
R361 1K R0603
R506 1K R0603
R265 10K R0603
R264 4.7K R0603
R237 10K R0603
R238 4.7K R0603
R246 10K R0603
R240 4.7K R0603
Q17 MMBT3904 SOT-23
Q20 MMBT3904 SOT-23
MP0 PULL LOW : NO PARITY FROM 82C556
MP1 PULL UP : INT PU/PD IF BUS IS IDLE
MP2 PUPP UP : INT PU/PD DURING SUSPEND
MP3 PULL UP : DRAM AT 5V
MP4 PULL UP : NORMAL MODE
ALPHA TOP
OPTI82C556
G753H0039
January 9, 1996

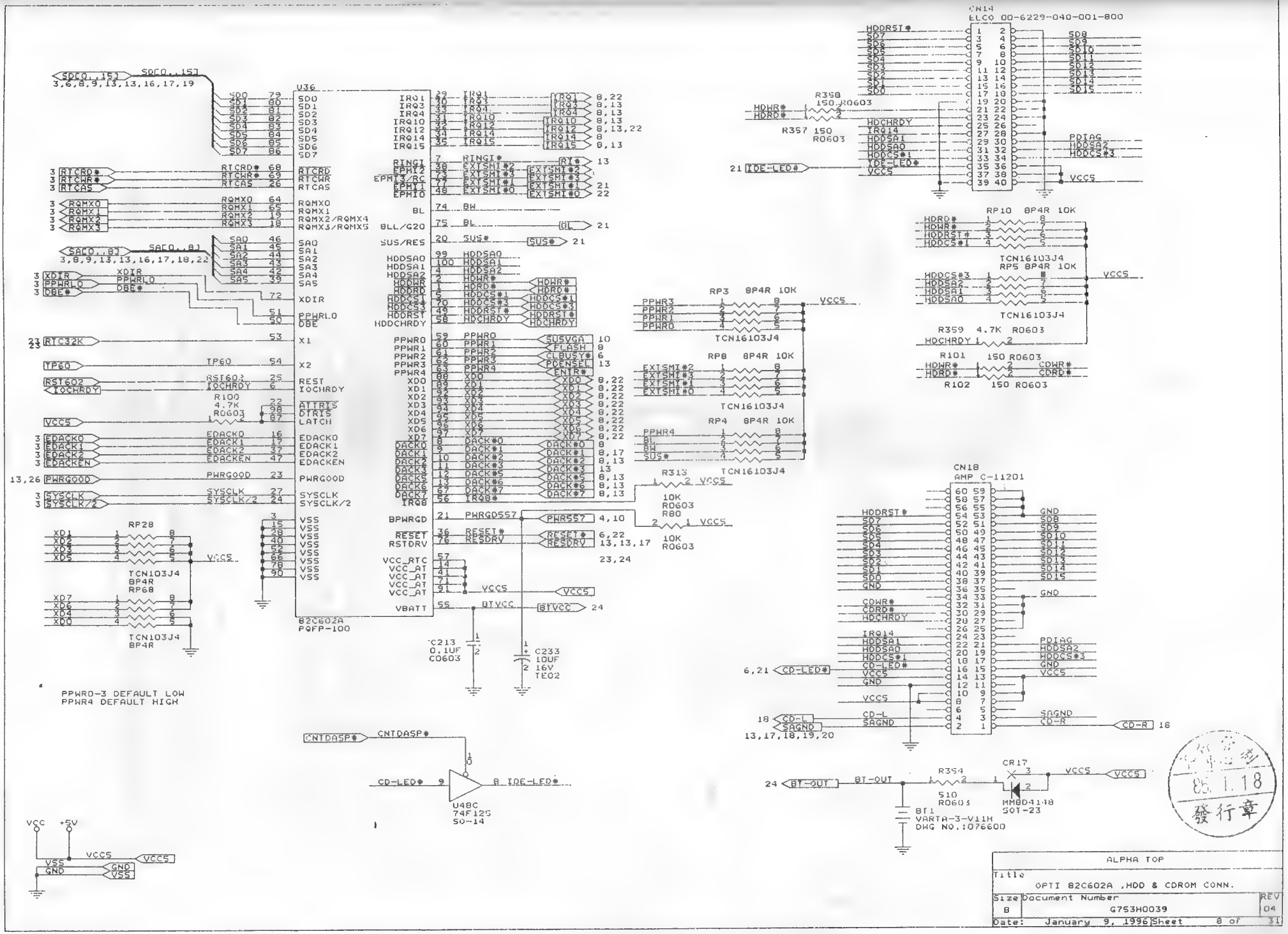
U36
82C602A
PQFP-100
CN14
ELCO 00-6229-040-001-800
CN18
AMP C-11201
RP28
TCN103J4
8P4R
RP68
RP3 8P4R 10K
RP4 8P4R 10K
RP8 8P4R 10K
RP10 8P4R 10K
RP5 8P4R 10K
TCN16103J4
R100 4.7K R0603
R313 10K R0603
R80 10K R0603
R358 150 R0603
R357 150 R0603
R359 4.7K R0603
R101 150 R0603
R102 150 R0603
C213 0.1UF C0603
C233 10UF 16V TE02
U48C 74F125 SO-14
BT1 VARTA-3-V11H
DWG NO.:076600
CR17 MMBD4148 SOT-23
R354 510 R0603
PPWR0-3 DEFAULT LOW
PPWR4 DEFAULT HIGH
ALPHA TOP
OPTI 82C602A ,HDD & CDROM CONN.
Size B
Document Number G753H0039
REV 04
Date: January 9, 1996 Sheet 8 of 31
85.1.18
發行章

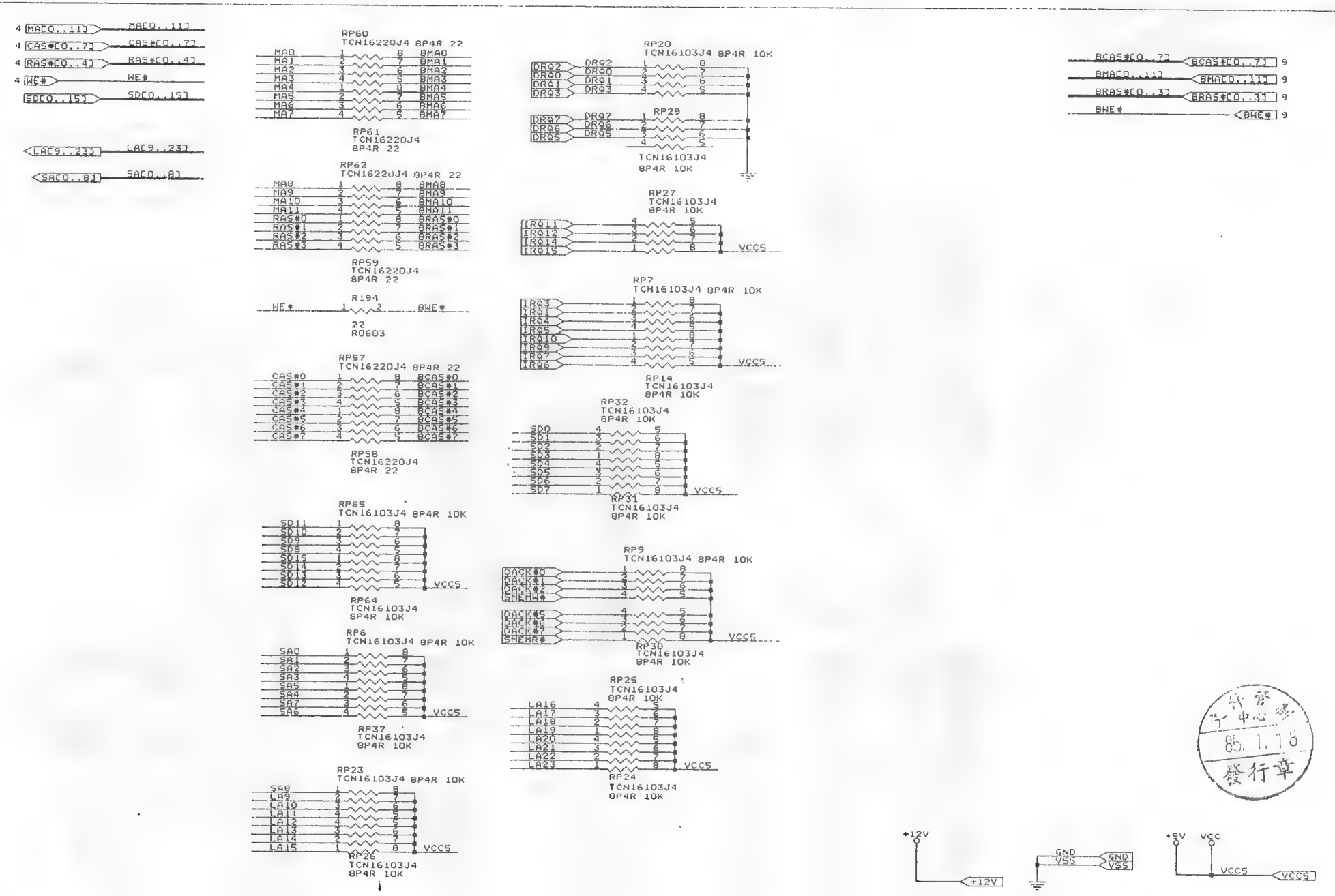


85.1.16 發行章

| | | |
|---|---|---|
| ALPHA TOP | | |
| Title: DAMPING RESISTOR | | |
| Size: B | Document Number: G753H0039 | REV: 04 |
| Date: January 9, 1996 | Sheet 9 of 11 | |

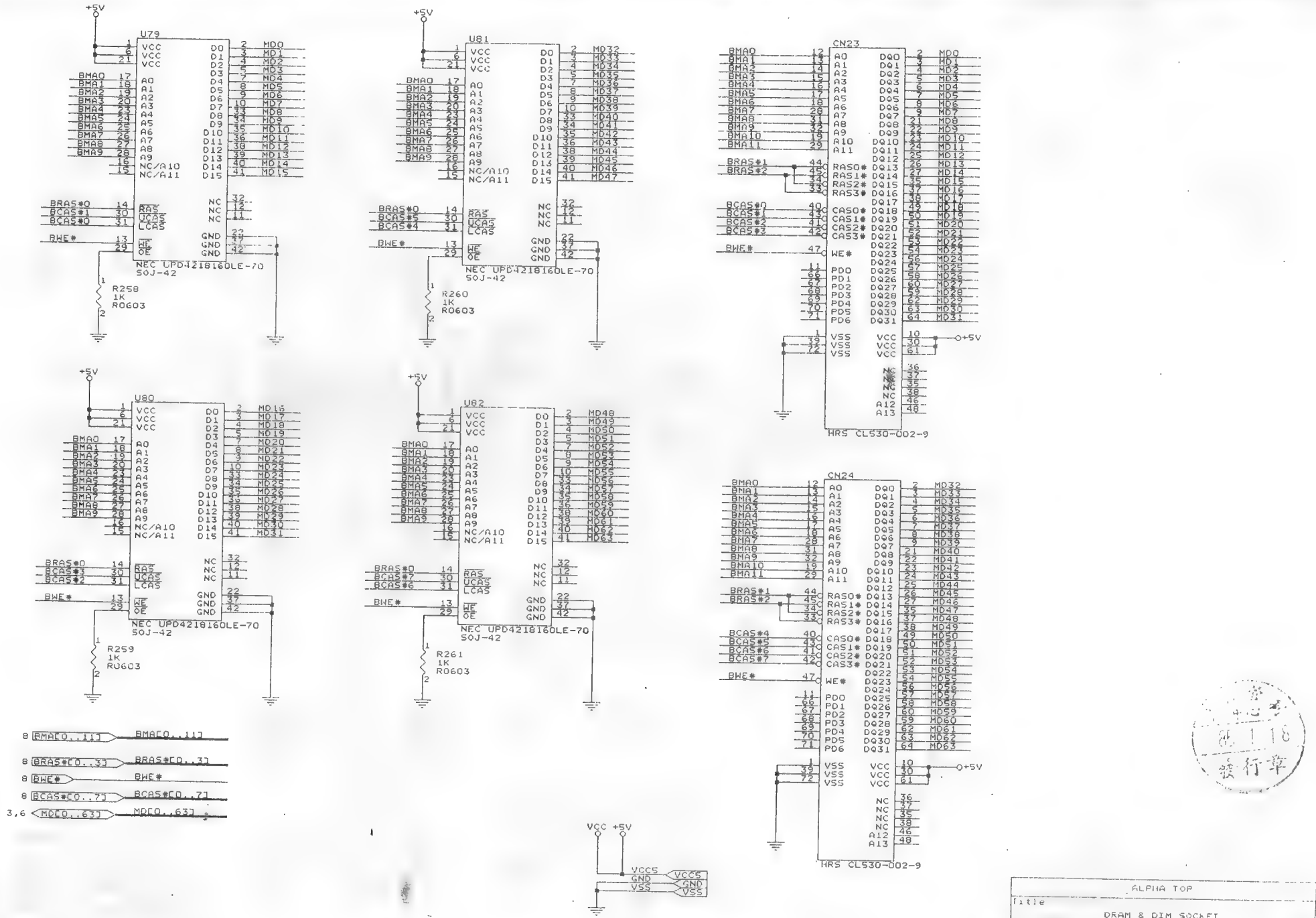
U79
U81
U80
U82
CN23
CN24
NEC UPD4218160LE-70
SOJ-42
HRS CL530-002-9
R258
R260
R259
R261
1K
R0603
+5V
VCC
GND
VSS
BMA0..11
BRAS*0..3
BCAS*0..7
BWE*
MD0..63
ALPHA TOP
DRAM & DIM SOCKET
G753H0039
January 9, 1996
10 of 31

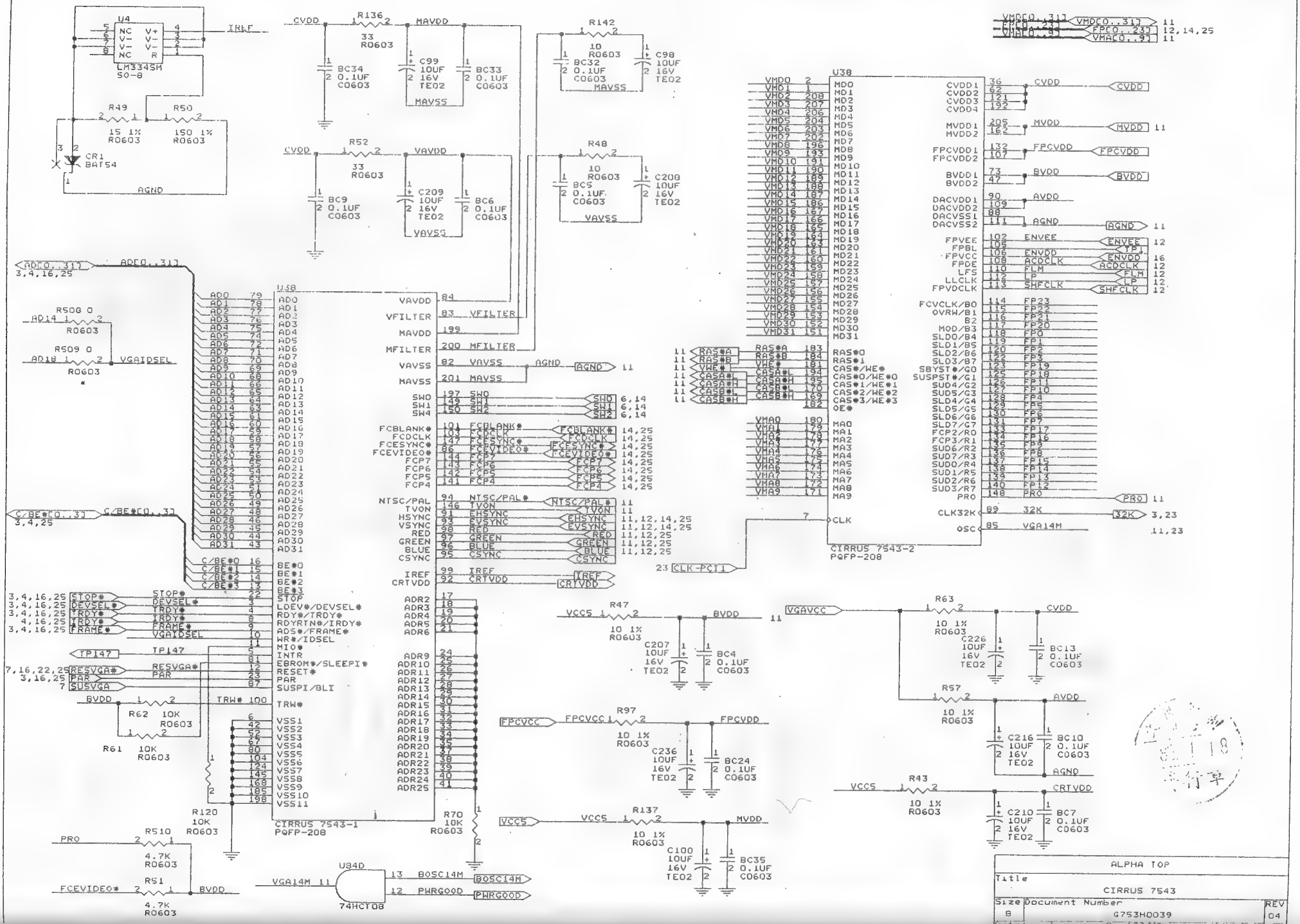
U4
LM334SM
SO-8
IREF
R49
15 1%
R0603
R50
150 1%
R0603
CR1
BAT54
AGND
CVDD
R136
33
R0603
MAVDD
BC34
0.1UF
C0603
C99
10UF
16V
TE02
BC33
0.1UF
C0603
MAVSS
R142
10
R0603
BC32
0.1UF
C0603
C98
10UF
16V
TE02
R52
33
R0603
VAVDD
BC9
0.1UF
C0603
C209
10UF
16V
TE02
BC6
0.1UF
C0603
VAVSS
R48
10
R0603
BC5
0.1UF
C0603
C208
10UF
16V
TE02
U38
CIRRUS 7543-2
PQFP-208
U48
CIRRUS 7543-1
PQFP-208
R508 0
R0603
R509 0
R0603
VGAIDSEL
R62 10K
R0603
R61 10K
R0603
TPI47
R120
10K
R0603
R70
10K
R0603
R510
4.7K
R0603
R51
4.7K
R0603
PRO
FCEVIDEO*
BVDD
U84D
74HCT08
B0SC14M
PWRGOOD
R47
10 1%
R0603
C207
10UF
16V
TE02
BC4
0.1UF
C0603
R97
10 1%
R0603
C236
10UF
16V
TE02
BC24
0.1UF
C0603
R137
10 1%
R0603
C100
10UF
16V
TE02
BC35
0.1UF
C0603
VGAVCC
R63
10 1%
R0603
C226
10UF
16V
TE02
BC13
0.1UF
C0603
R57
10 1%
R0603
C216
10UF
16V
TE02
BC10
0.1UF
C0603
R43
10 1%
R0603
C210
10UF
16V
TE02
BC7
0.1UF
C0603
ALPHA TOP
Title
CIRRUS 7543
Size B
Document Number
G753H0039
REV 04

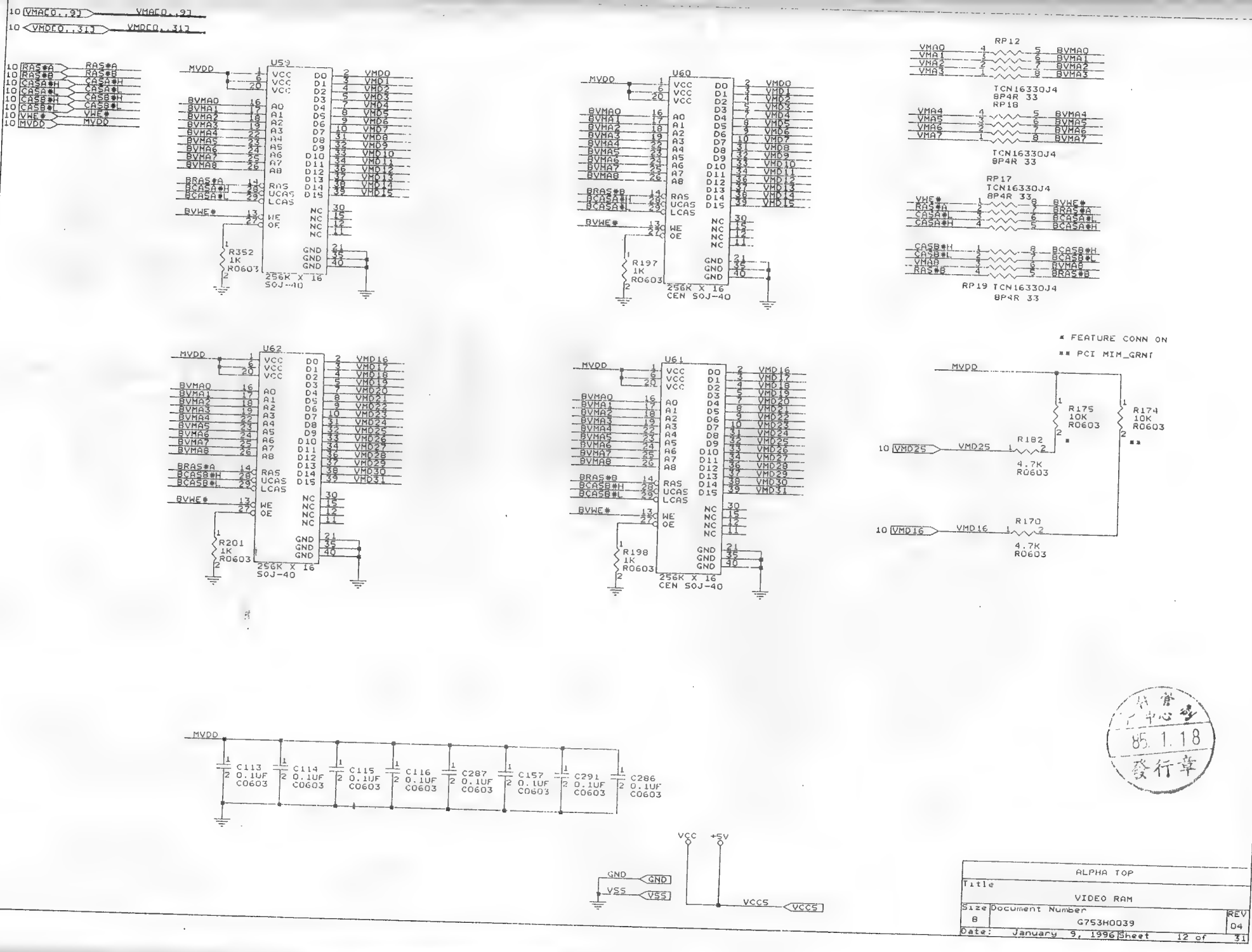


| | | |
|---|---|---|
| | ALPHA TOP | |
| Title | VIDEO RAM | |
| Size B | Document Number G753H0039 | REV 04 |
| Date: January 9, 1996 | Sheet 12 of | 31 |

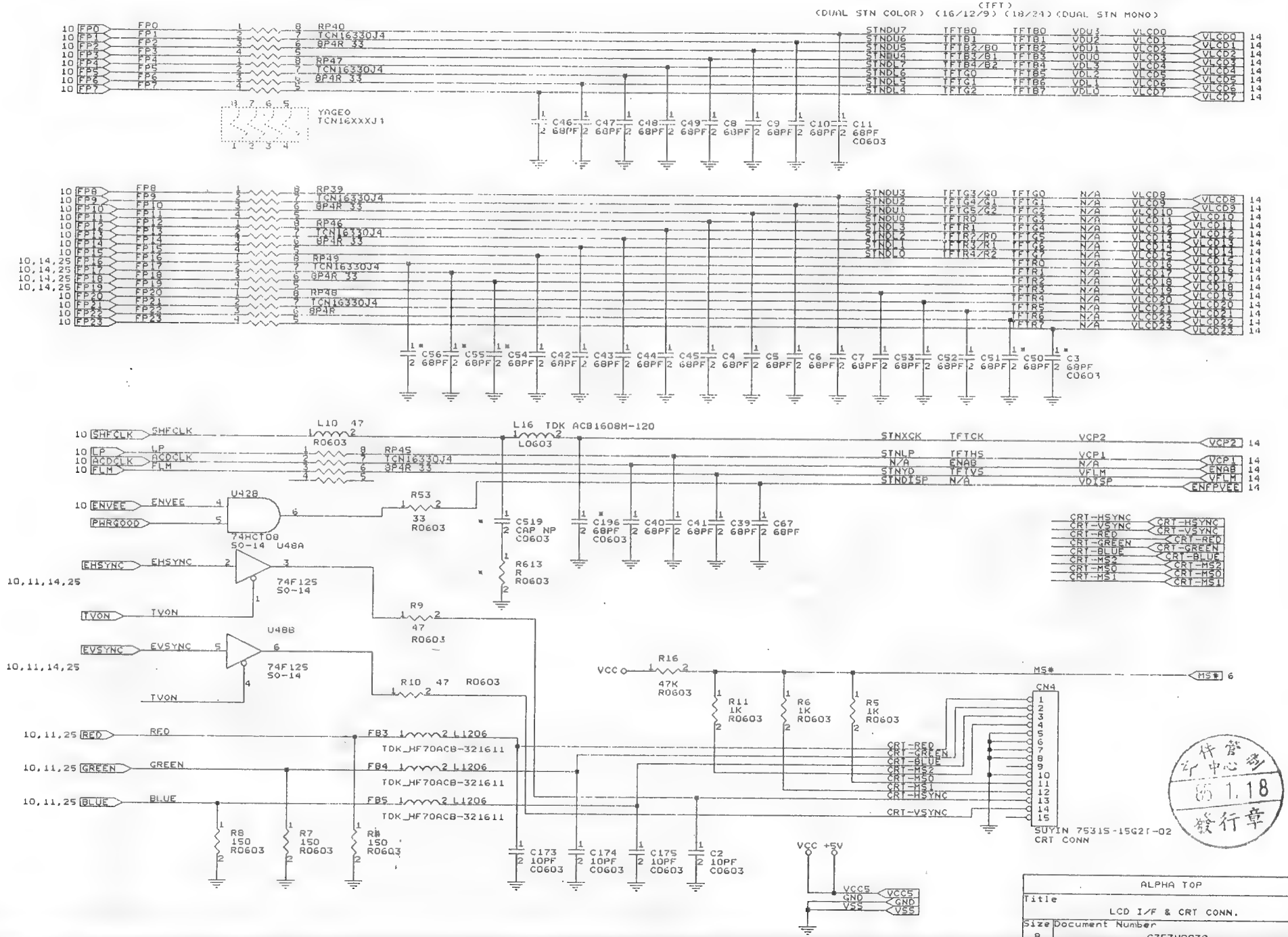
(TFT)
(DUAL STN COLOR) (16/12/9) (18/24) (DUAL STN MONO)
FP0 FP1 FP2 FP3 FP4 FP5 FP6 FP7
RP40 TCN16330J4 8P4R 33
RP47 TCN16330J4 8P4R 33
YAGEO TCN16XXXJ1
STNDU7 STNDU6 STNDU5 STNDU4 STNDL7 STNDL6 STNDL5 STNDL4
TFTB0 TFTB1 TFTB2/B0 TFTB3/B1 TFTB4/B2 TFTG0 TFTG1 TFTG2
TFTB0 TFTB1 TFTB2 TFTB3 TFTB4 TFTB5 TFTB6 TFTB7
VDU3 VDU2 VDU1 VDU0 VDL3 VDL2 VDL1 VDL0
VLCD0 VLCD1 VLCD2 VLCD3 VLCD4 VLCD5 VLCD6 VLCD7
C46 C47 C48 C49 C8 C9 C10 C11 68PF C0603
FP8 FP9 FP10 FP11 FP12 FP13 FP14 FP15 FP16 FP17 FP18 FP19 FP20 FP21 FP22 FP23
RP39 RP46 RP49 RP48 TCN16330J4 8P4R 33
STNDU3 STNDU2 STNDU1 STNDU0 STNDL3 STNDL2 STNDL1 STNDL0
TFTG3/G0 TFTG4/G1 TFTG5/G2 TFTRD TFTR1 TFTR2/R0 TFTR3/R1 TFTR4/R2
TFTG3 TFTG4 TFTG5 TFTG6 TFTG7 TFTR0 TFTR1 TFTR2 TFTR3 TFTR4 TFTR5 TFTR6 TFTR7
N/A
VLCD8 VLCD9 VLCD10 VLCD11 VLCD12 VLCD13 VLCD14 VLCD15 VLCD16 VLCD17 VLCD18 VLCD19 VLCD20 VLCD21 VLCD22 VLCD23
C56 C55 C54 C42 C43 C44 C45 C4 C5 C6 C7 C53 C52 C51 C50 C3 68PF C0603
SHFCLK LP ACDCLK FLM
L10 47 R0603
L16 TDK ACB1608M-120 L0603
RP45 TCN16330J4 8P4R 33
STNXCK STNLP N/A STNYD STNDISP
TFTCK TFTHS ENAB TFTVS
VCP2 VCP1 ENAB VFLM ENFPVEE
ENVEE PWRGOOD
U42B 74HCT08 SO-14 U48A
R53 33 R0603
C519 CAP NP C0603
C196 C40 C41 C39 C67 68PF C0603
R613 R R0603
EHSYNC TVON EVSYNC
74F125 SO-14
U48B
R9 47 R0603
R10 47 R0603
10,11,14,25
CRT-HSYNC CRT-VSYNC CRT-RED CRT-GREEN CRT-BLUE CRT-MS2 CRT-MS0 CRT-MS1
VCC R16 47K R0603
MS*
R11 R6 R5 1K R0603
CN4
RED GREEN BLUE
FB3 FB4 FB5 L1206 TDK_HF70ACB-321611
R8 R7 R6 150 R0603
C173 C174 C175 C2 10PF C0603
VCC +5V
VCC5 GND VSS
SUYIN 7531S-15G2F-02 CRT CONN
ALPHA TOP
Title
LCD I/F & CRT CONN.
Size B
Document Number G753H0039
REV 04
Date: January 9, 1996 Sheet 11 of 31

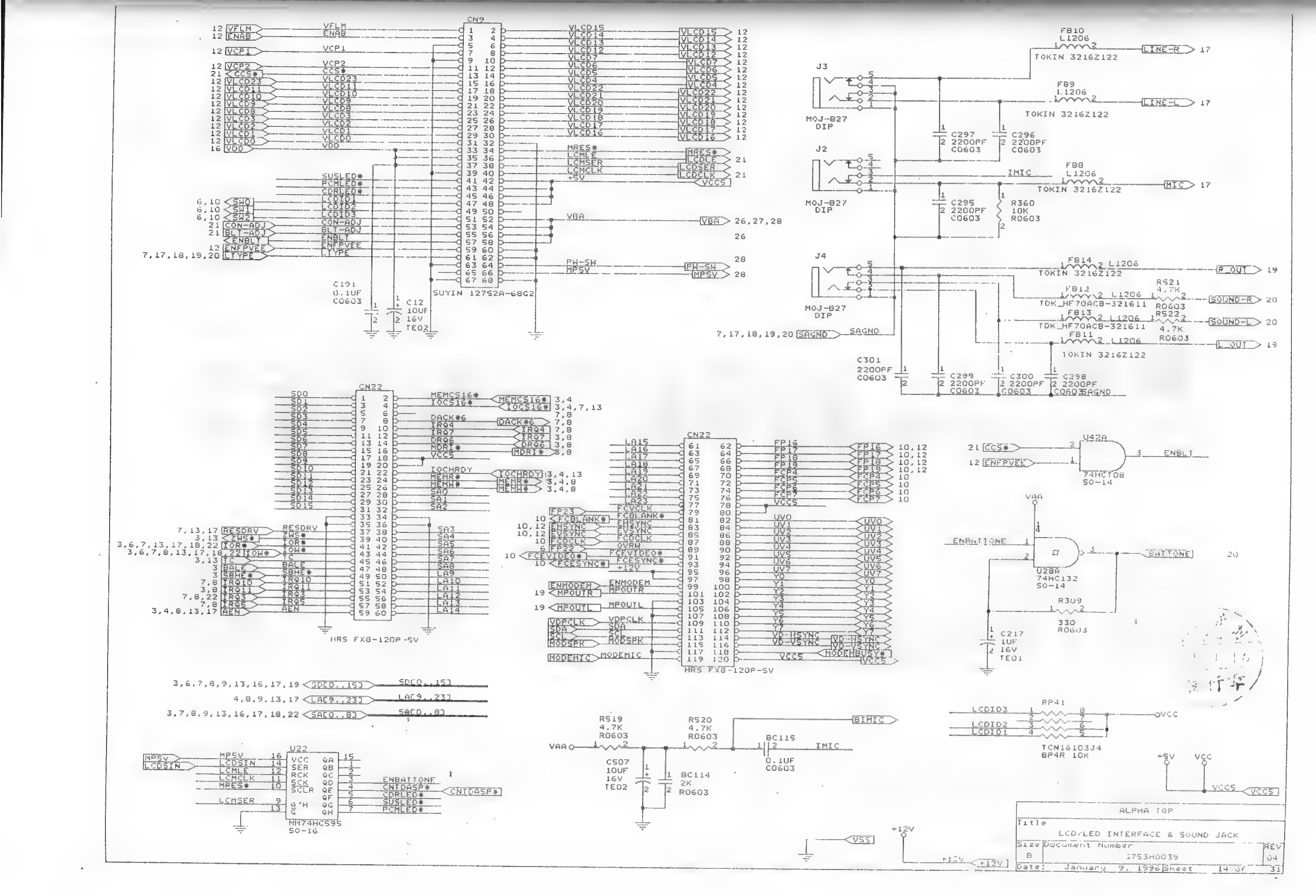
CN9
SUYIN 12752A-68G2
CN22
HRS FX8-120P-SV
J3
J2
J4
M0J-B27 DIP
TOKIN 3216Z122
FB10 L1206
FB9 L1206
FB8 L1206
FB14 L1206
FB12 L1206
FB13 L1206
FB11 L1206
TDK HF70ACB-321611
C297 2200PF C0603
C296 2200PF C0603
C295 2200PF C0603
R360 10K R0603
C301 2200PF C0603
C299 2200PF C0603
C300 2200PF C0603
C298 2200PF C0603
R521 4.7K R0603
R522 4.7K R0603
C191 0.1UF C0603
C12 10UF 16V TE02
U42A 74HCT08 SO-14
U28A 74HC132 SO-14
R309 330 R0603
C217 1UF 16V TE01
U22 MM74HC595 SO-16
R519 4.7K R0603
R520 4.7K R0603
C507 10UF 16V TE02
BC114 2K R0603
BC115 0.1UF C0603
RP41 TCN16103J4 8P4R 10K
ALPHA TOP
LCD/LED INTERFACE & SOUND JACK
Size B
Document Number 3753H0039
REV 04
Date: January 9, 1996
Sheet 14 of 31

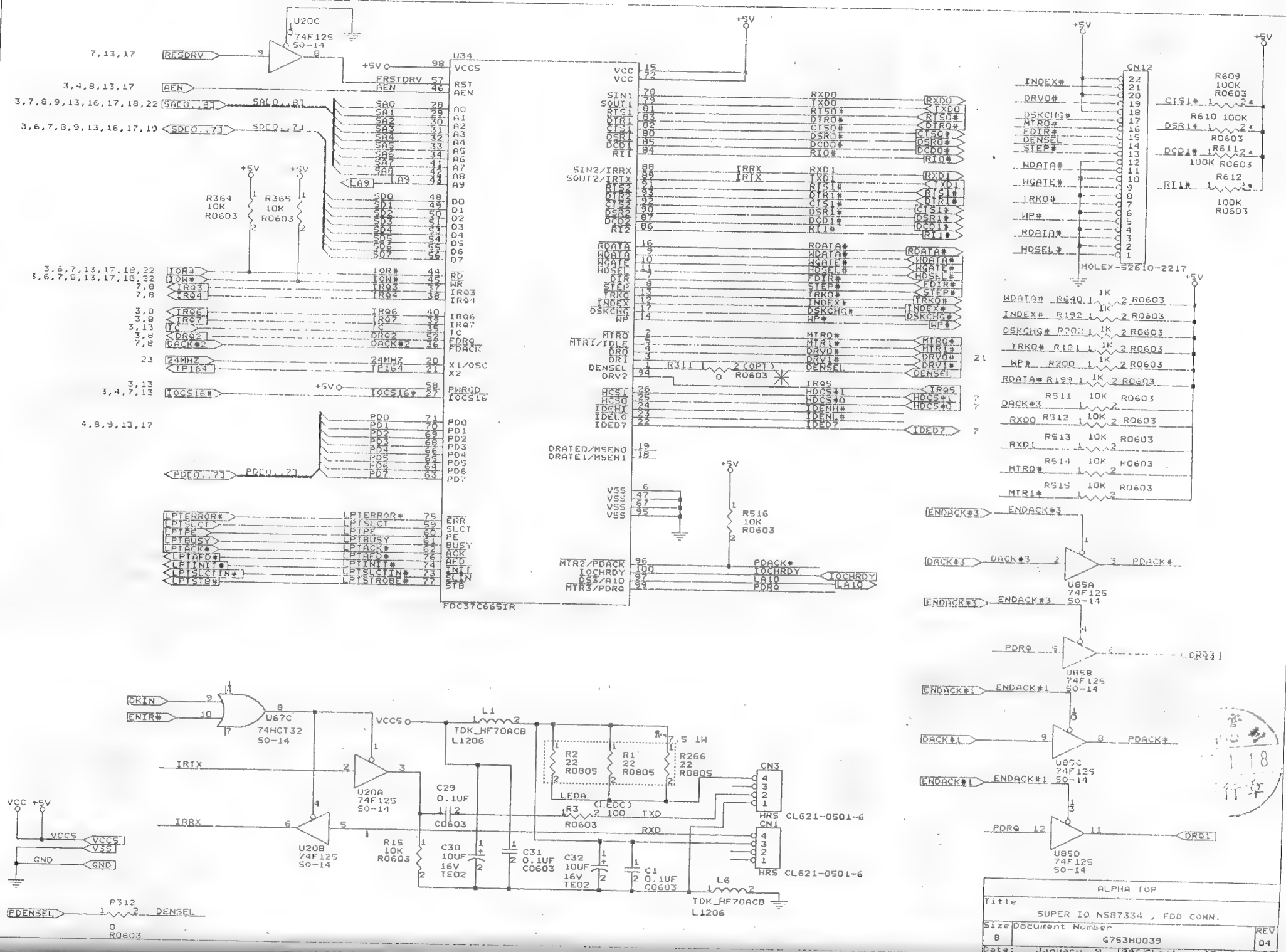

U20C
74F125
SO-14
U34
FDC37C665IR
CN12
MOLEX-52610-2217
U67C
74HCT32
SO-14
U20A
74F125
SO-14
U20B
74F125
SO-14
U85A
74F125
SO-14
U85B
74F125
SO-14
U85C
74F125
SO-14
U85D
74F125
SO-14
L1
TDK_HF70ACB
L1206
L6
TDK_HF70ACB
L1206
CN3
HRS CL621-0501-6
CN1
HRS CL621-0501-6
ALPHA TOP
Title
SUPER IO NS87334 , FDD CONN.
Size
B
Document Number
G753H0039
REV
04

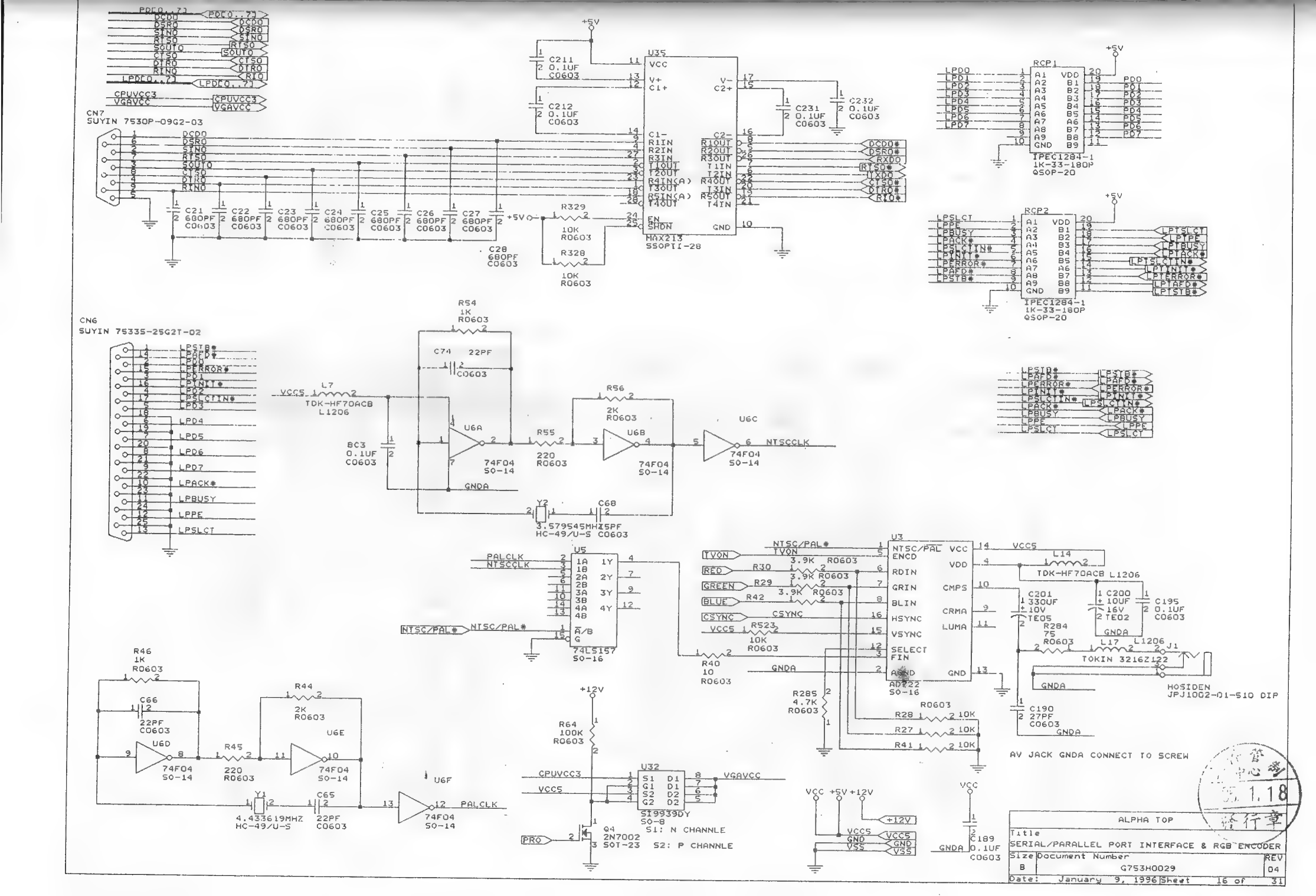
CN7
SUYIN 7530P-09G2-03
CN6
SUYIN 75335-25G2T-02
U35
MAX213
SSOPII-28
RCP1
RCP2
IPEC1284-1
1K-33-180P
QSOP-20
U3
NTSC/PAL ENCD
AD722
SO-16
U5
74LS157
SO-16
U6A
U6B
U6C
U6D
U6E
U6F
74F04
SO-14
U32
SI9939DY
SO-8
S1: N CHANNLE
S2: P CHANNLE
Q4
2N7002
SOT-23
TDK-HF70ACB L1206
TOKIN 3216Z122
HOSIDEN
JPJ1002-01-510 DIP
AV JACK GNDA CONNECT TO SCREW
ALPHA TOP
SERIAL/PARALLEL PORT INTERFACE & RGB ENCODER
G753H0029
REV 04
Date: January 9, 1996 Sheet 16 of 31

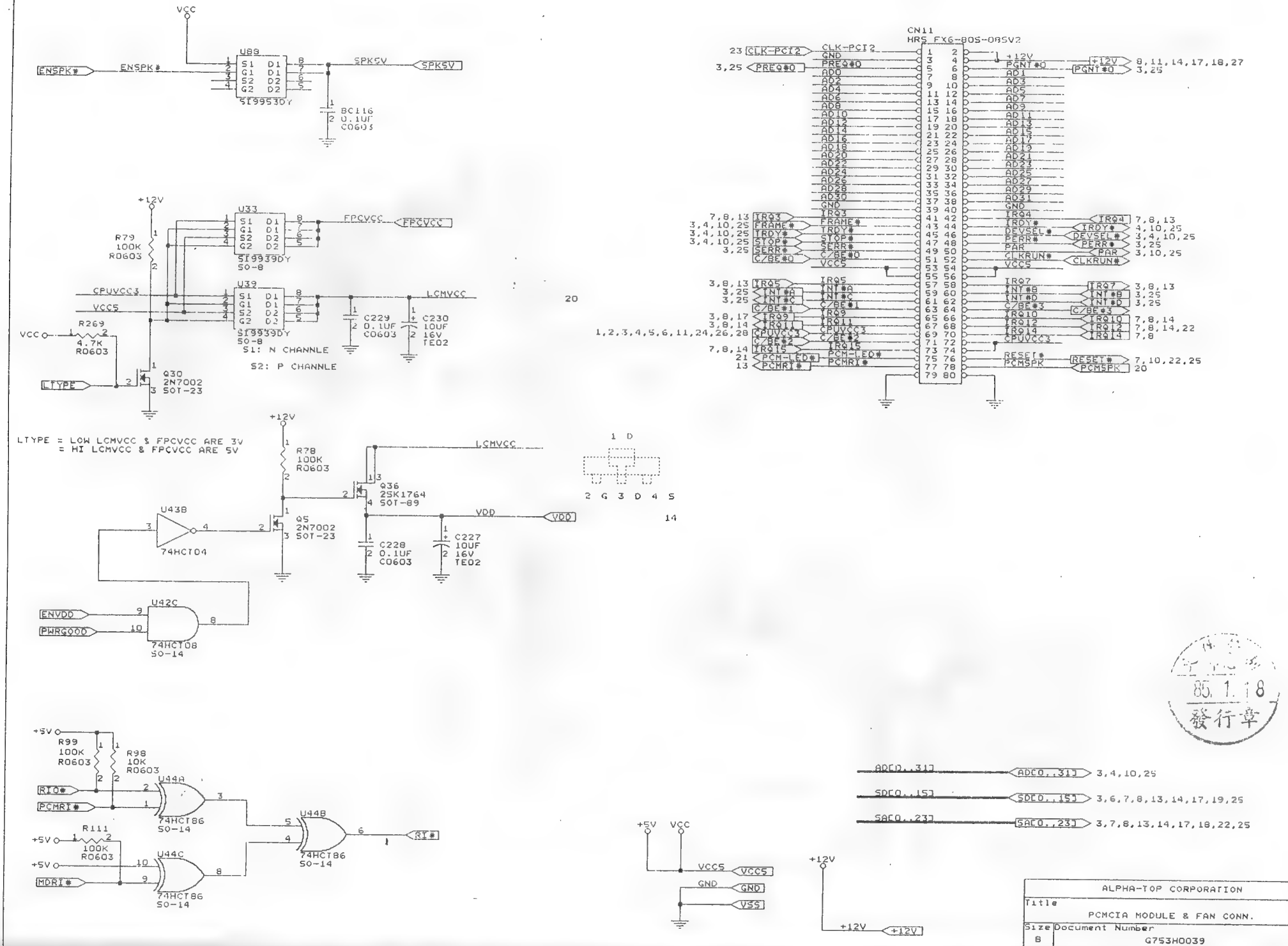


| | |
|---|---|
| ALPHA-TOP CORPORATION | |
| Title | PCMCIA MODULE & FAN CONN. |
| Size: B | Document Number: G753H0039 |
| REV: 04 | |
| Date: January 9, 1996 | Sheet 17 of 31 |

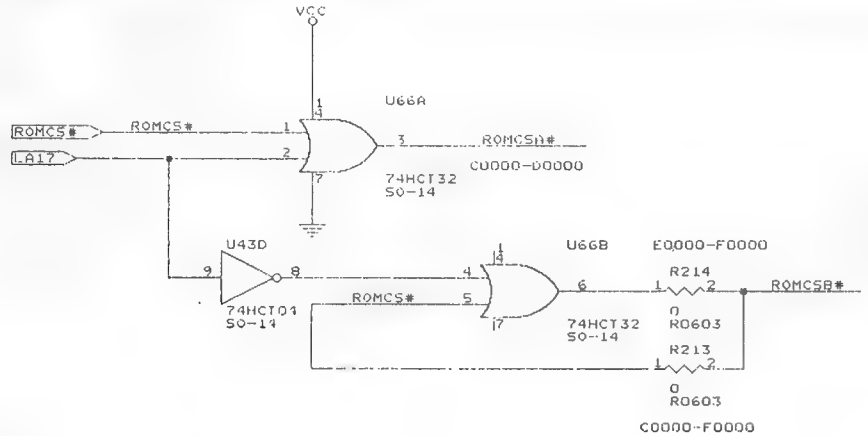


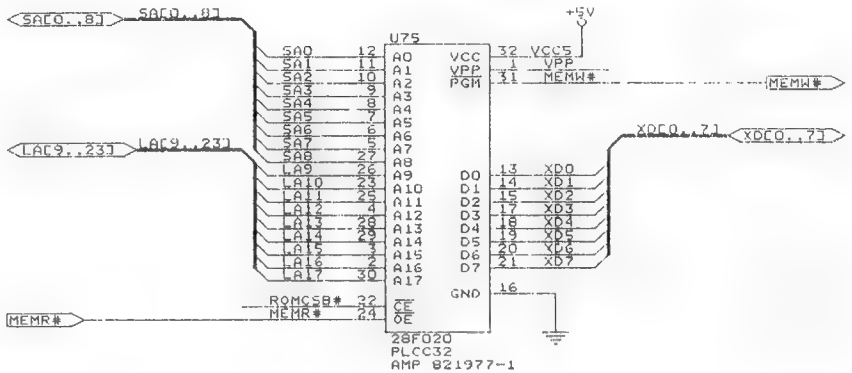


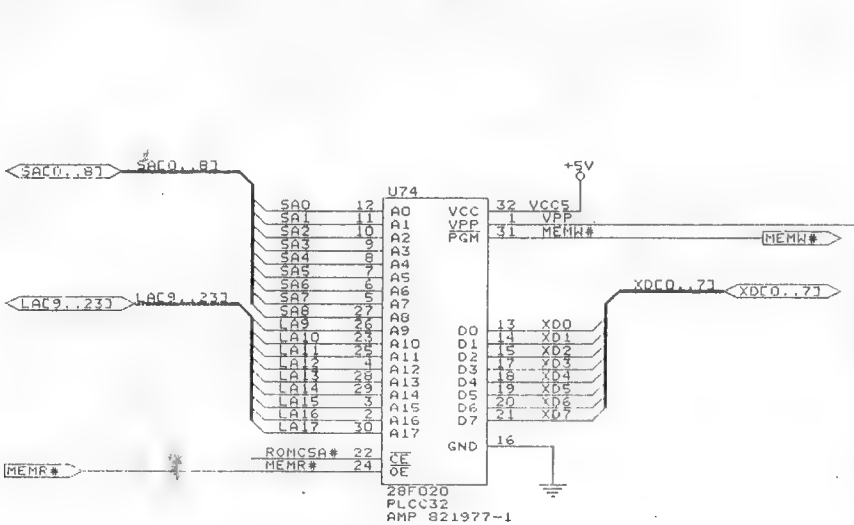


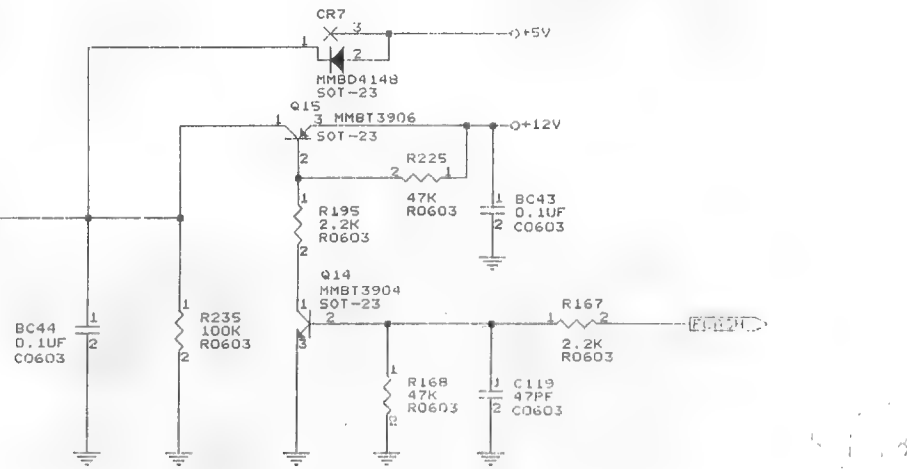


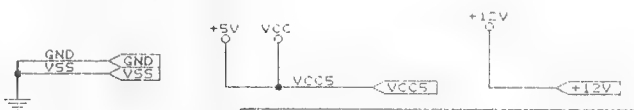


| | | |
|---|---|---|
| Title | SYSTEM BIOS | |
| Size B | Document Number G753H0039 | REV 04 |
| Date: January 9, 1996 | Sheet 18 of 31 | |

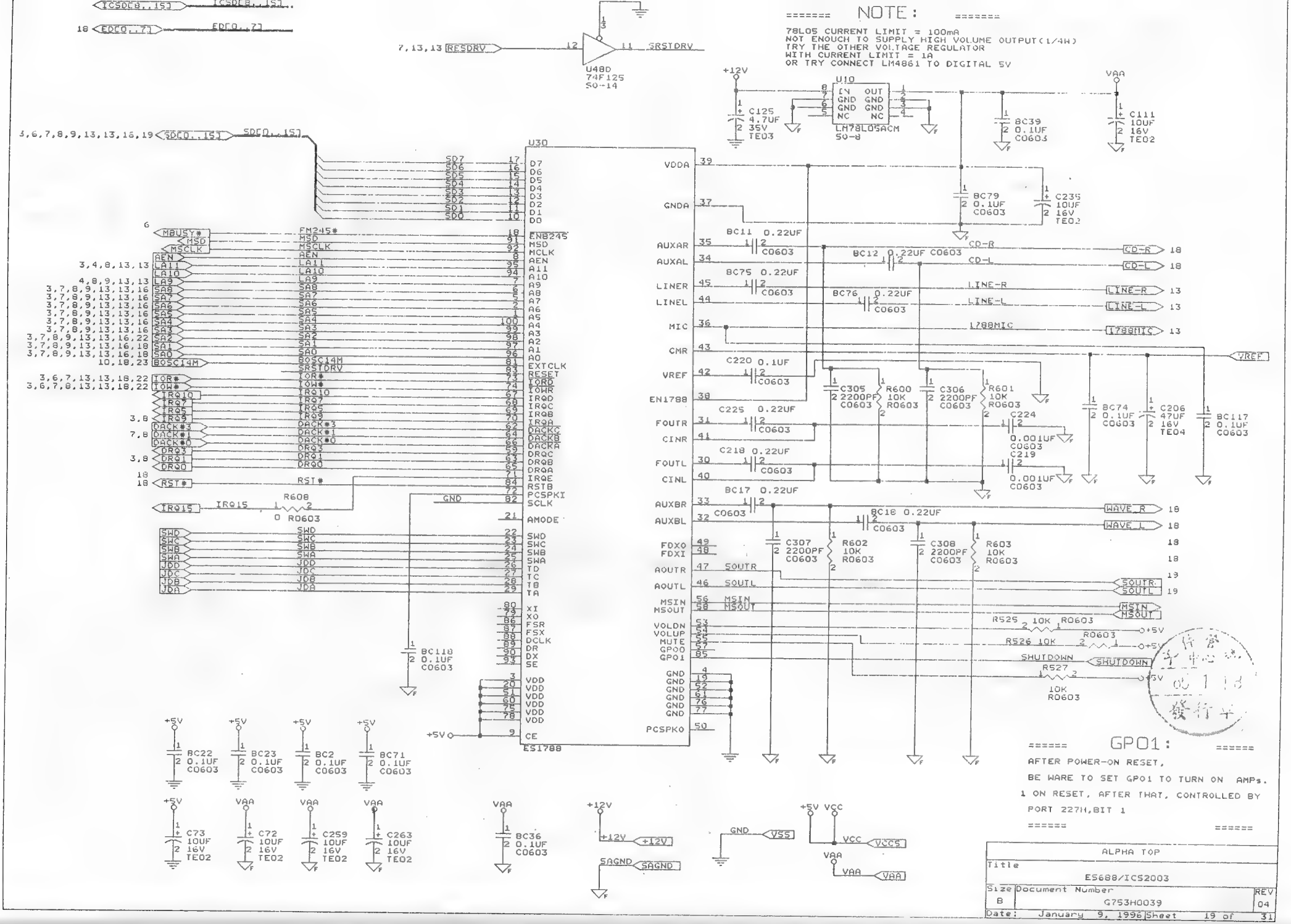
NOTE :
78L05 CURRENT LIMIT = 100mA
NOT ENOUCH TO SUPPLY HIGH VOLUME OUTPUT(1/4W)
TRY THE OTHER VOLTAGE REGULATOR
WITH CURRENT LIMIT = 1A
OR TRY CONNECT LM4861 TO DIGITAL 5V
U30
ES1788
U10
LM78L05ACM
SO-8
U48D
74F125
SO-14
GP01 :
AFTER POWER-ON RESET,
BE WARE TO SET GP01 TO TURN ON AMPs.
1 ON RESET, AFTER THAT, CONTROLLED BY
PORT 227H,BIT 1
ALPHA TOP
Title
ES688/ICS2003
Size B
Document Number G753H0039
REV 04
Date: January 9, 1996
Sheet 19 of 31

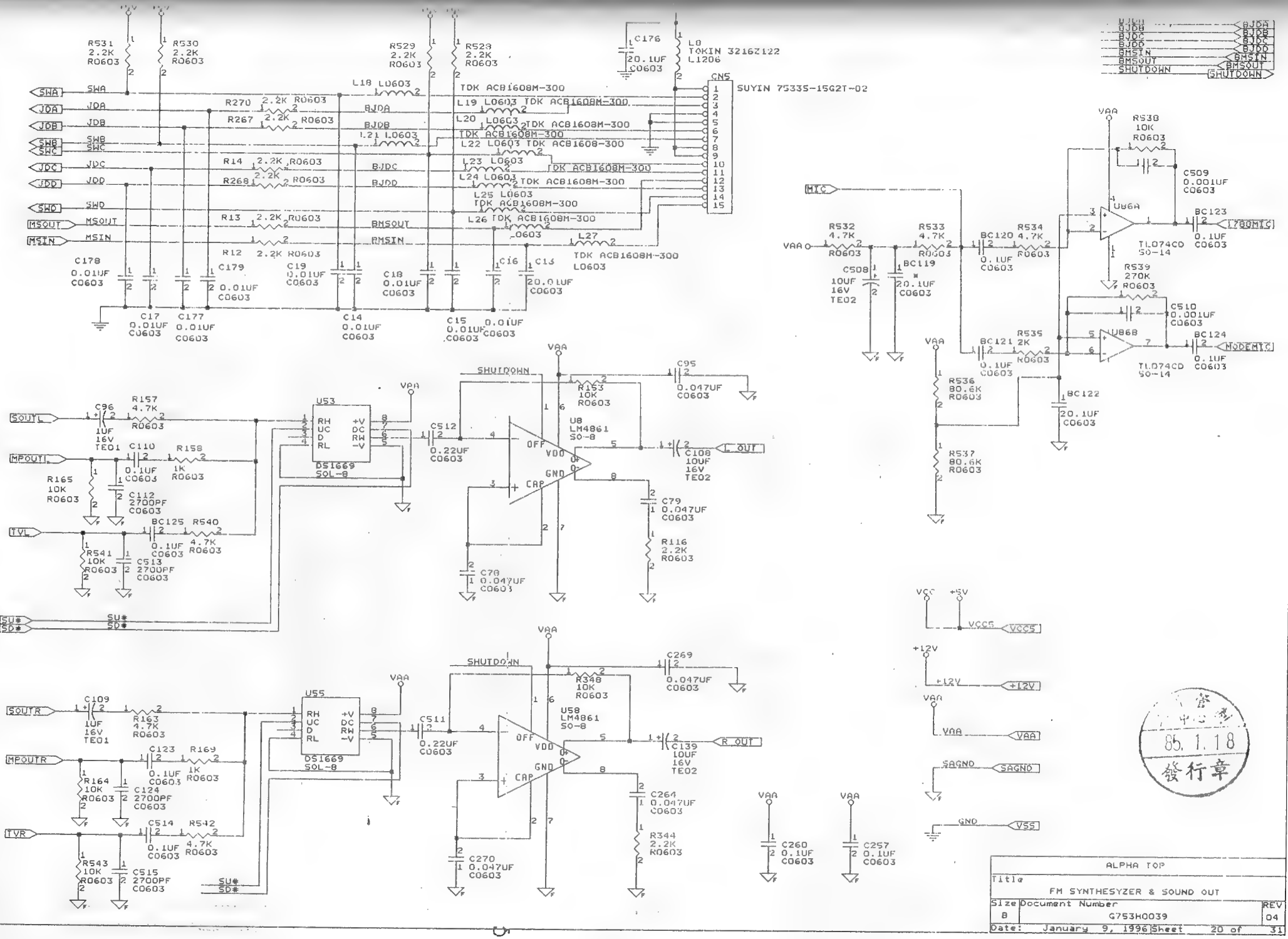
R531 2.2K R0603
R530 2.2K R0603
R529 2.2K R0603
R523 2.2K R0603
C176 20.1UF C0603
L8 TOKIN 3216Z122 L1206
CN5 SUYIN 75335-15G2T-02
SWA
JDA
JDB
SWB
SWC
JDC
JDD
SWD
MSOUT
MSIN
R270 2.2K R0603
R267 2.2K R0603
R14 2.2K R0603
R268 2.2K R0603
R13 2.2K R0603
R12 2.2K R0603
L18 L0603 TDK ACB1608M-300
L19 L0603 TDK ACB1608M-300
L20 L0603 TDK ACB1608M-300
L21 L0603 TDK ACB1608M-300
L22 L0603 TDK ACB1608-300
L23 L0603 TDK ACB1608M-300
L24 L0603 TDK ACB1608M-300
L25 L0603 TDK ACB1608M-300
L26 TDK ACB1608M-300 L0603
L27 TDK ACB1608M-300 L0603
BJDA
BJDB
BJDC
BJDD
BMSOUT
BMSIN
C178 0.01UF C0603
C179 0.01UF C0603
C19 0.01UF C0603
C18 0.01UF C0603
C16 20.0UF C0603
C15 0.01UF C0603
C17 0.01UF C0603
C177 0.01UF C0603
C14 0.01UF C0603
C15 0.01UF C0603
BJDA
BJDB
BJDC
BJDD
BMSIN
BMSOUT
SHUTDOWN
VAA
R538 10K R0603
C509 0.001UF C0603
U86A
TL074CD SO-14
BC123 0.1UF C0603
I780MIC
MIC
R532 4.7K R0603
R533 4.7K R0603
R534 4.7K R0603
BC120 0.1UF C0603
C508 10UF 16V TE02
BC119 * 20.1UF C0603
R539 270K R0603
C510 0.001UF C0603
U86B
TL074CD SO-14
BC124 0.1UF C0603
MODEMIC
R535 2K R0603
BC121 0.1UF C0603
R536 80.6K R0603
R537 80.6K R0603
BC122 20.1UF C0603
SOUTL
MPOUTL
TVL
R157 4.7K R0603
C96 1UF 16V TE01
C110 0.1UF C0603
R158 1K R0603
R165 10K R0603
C112 2700PF C0603
BC125 0.1UF C0603
R540 4.7K R0603
R541 10K R0603
C513 2700PF C0603
U53 DS1669 SOL-8
RH UC D RL +V DC RW -V
C512 0.22UF C0603
U8 LM4861 SO-8
OFF VDD GND CAP
C95 0.047UF C0603
R153 10K R0603
C108 10UF 16V TE02
L_OUT
C79 0.047UF C0603
R116 2.2K R0603
C78 0.047UF C0603
SU*
SD*
SOUTR
MPOUTR
TVR
C109 1UF 16V TE01
R163 4.7K R0603
C123 0.1UF C0603
R169 1K R0603
R164 10K R0603
C124 2700PF C0603
C514 0.1UF C0603
R542 4.7K R0603
R543 10K R0603
C515 2700PF C0603
U55 DS1669 SOL-8
C511 0.22UF C0603
U58 LM4861 SO-8
R348 10K R0603
C269 0.047UF C0603
C139 10UF 16V TE02
R_OUT
C264 0.047UF C0603
R344 2.2K R0603
C270 0.047UF C0603
C260 0.1UF C0603
C257 0.1UF C0603
VCC
+5V
VCC5
+12V
SAGND
GND
VSS
ALPHA TOP
FM SYNTHESYZER & SOUND OUT
Size B
Document Number G753H0039
REV 04
Date: January 9, 1996
Sheet 20 of 31

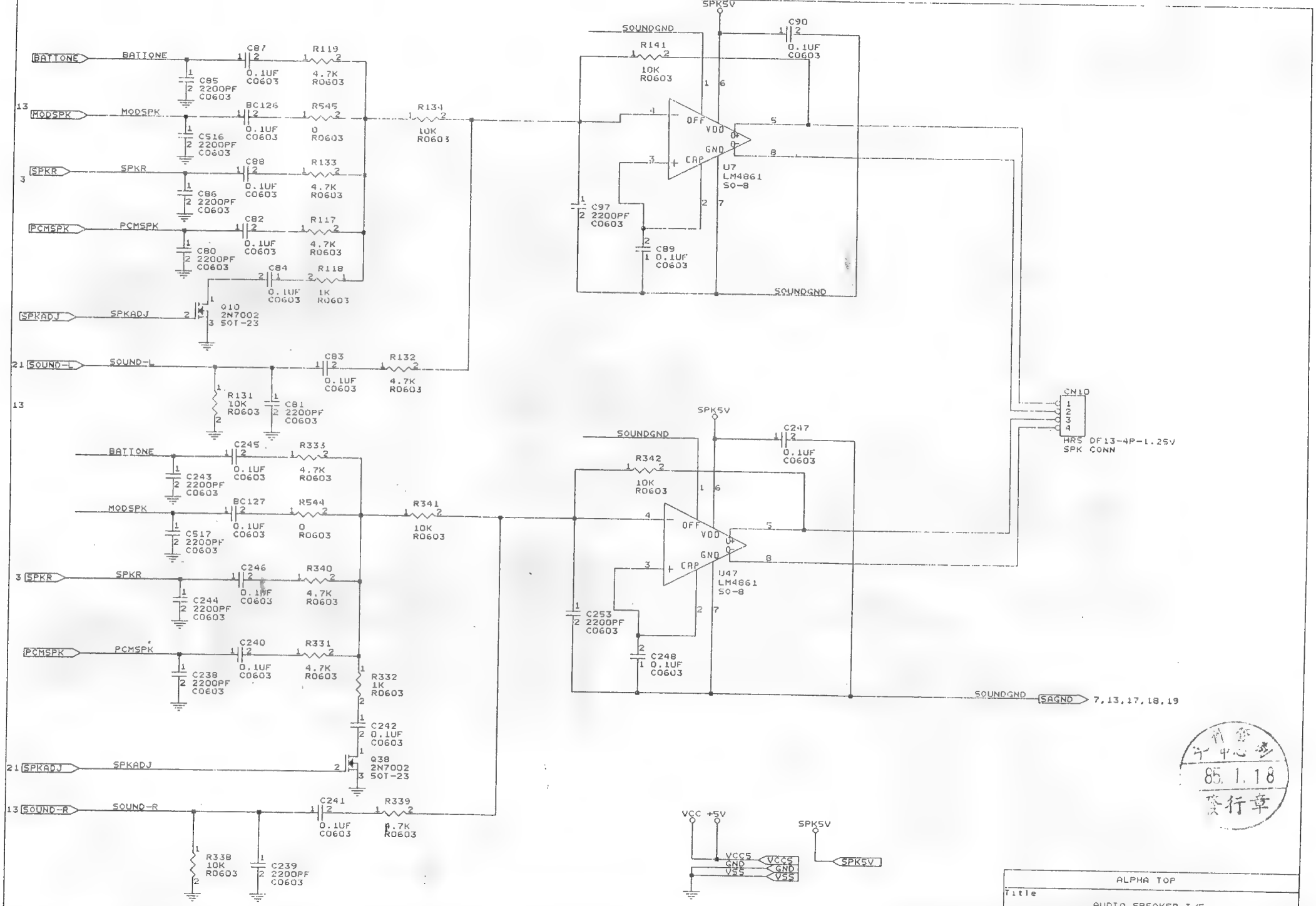


85.1.18 發行章

| | | |
|---|---|---|
| ALPHA TOP | | |
| Title: AUDIO SPEAKER I/F | | |
| Size: B | Document Number: G753H0039 | REV: 04 |
| Date: January 9, 1996 | Sheet 21 of 31 | |

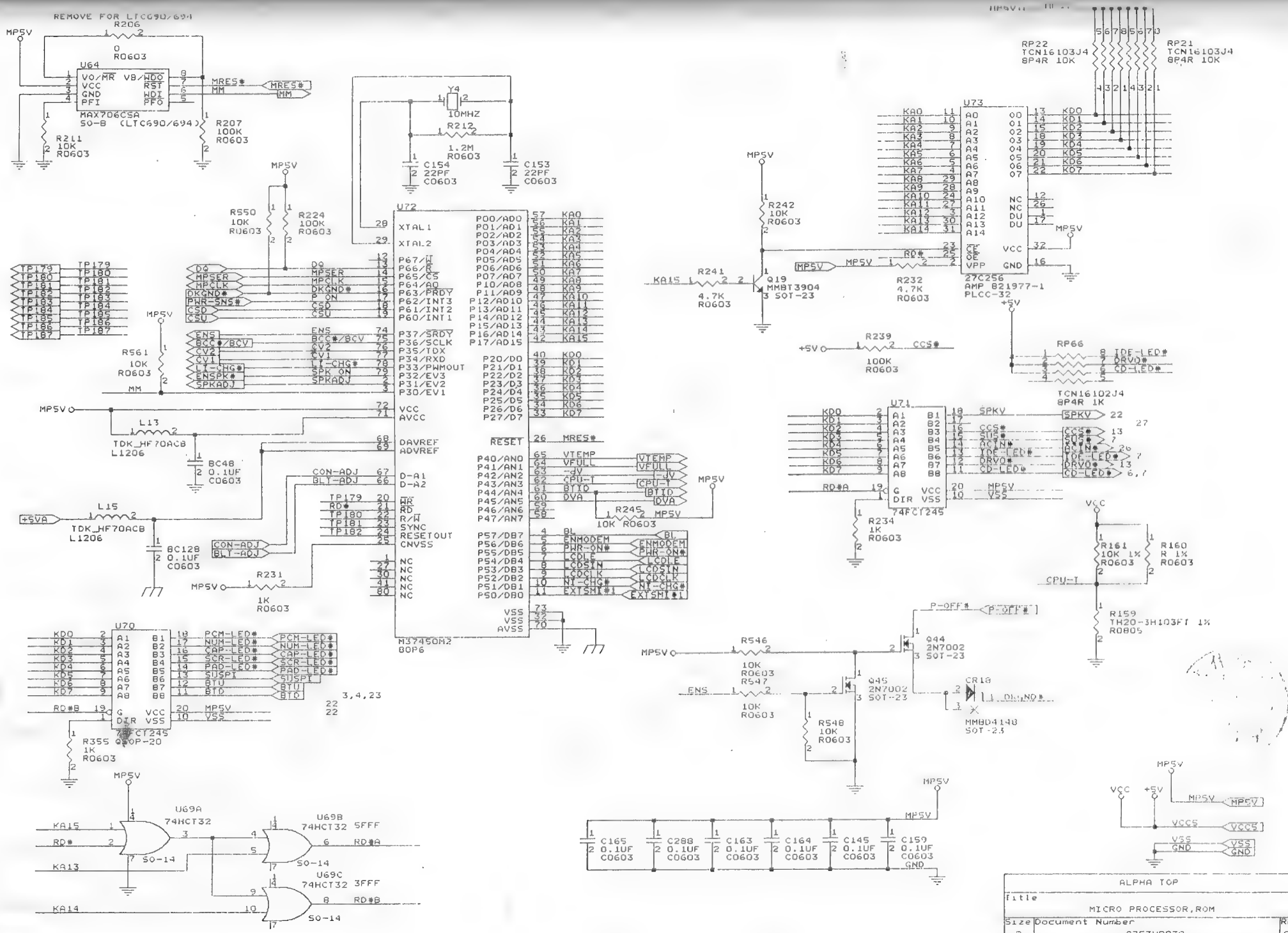
REMOVE FOR LTC690/694
R206
0
R0603
U64
MAX706CSA
SO-8 (LTC690/694)
R211
10K
R0603
R207
100K
R0603
MRES#
MM
MP5V
Y4
10MHZ
R212
1.2M
R0603
C154
22PF
C0603
C153
22PF
C0603
U72
M37450M2
80P6
R550
10K
R0603
R224
100K
R0603
R561
10K
R0603
L13
TDK_HF70ACB
L1206
BC48
0.1UF
C0603
L15
TDK_HF70ACB
L1206
BC128
0.1UF
C0603
R231
1K
R0603
+5VA
U70
74FCT245
QSOP-20
R355
1K
R0603
U69A
74HCT32
SO-14
U69B
74HCT32 5FFF
U69C
74HCT32 3FFF
U73
27C256
AMP 821977-1
PLCC-32
RP22
TCN16103J4
8P4R 10K
RP21
TCN16103J4
8P4R 10K
R242
10K
R0603
R241
4.7K
R0603
Q19
MMBT3904
SOT-23
R232
4.7K
R0603
R239
100K
R0603
RP66
TCN16102J4
8P4R 1K
U71
74FCT245
R234
1K
R0603
R245
10K R0603
R161
10K 1%
R0603
R160
R 1%
R0603
R159
TH20-3H103FT 1%
R0805
R546
10K
R0603
R547
10K
R0603
Q44
2N7002
SOT-23
Q45
2N7002
SOT-23
CR18
MMBD4148
SOT-23
R548
10K
R0603
C165
0.1UF
C0603
C288
0.1UF
C0603
C163
0.1UF
C0603
C164
0.1UF
C0603
C145
0.1UF
C0603
C159
0.1UF
C0603
ALPHA TOP
Title
MICRO PROCESSOR,ROM
Size
B
Document Number
G753H0039
REV
04
Date: January 9, 1996
Sheet 22 of 31

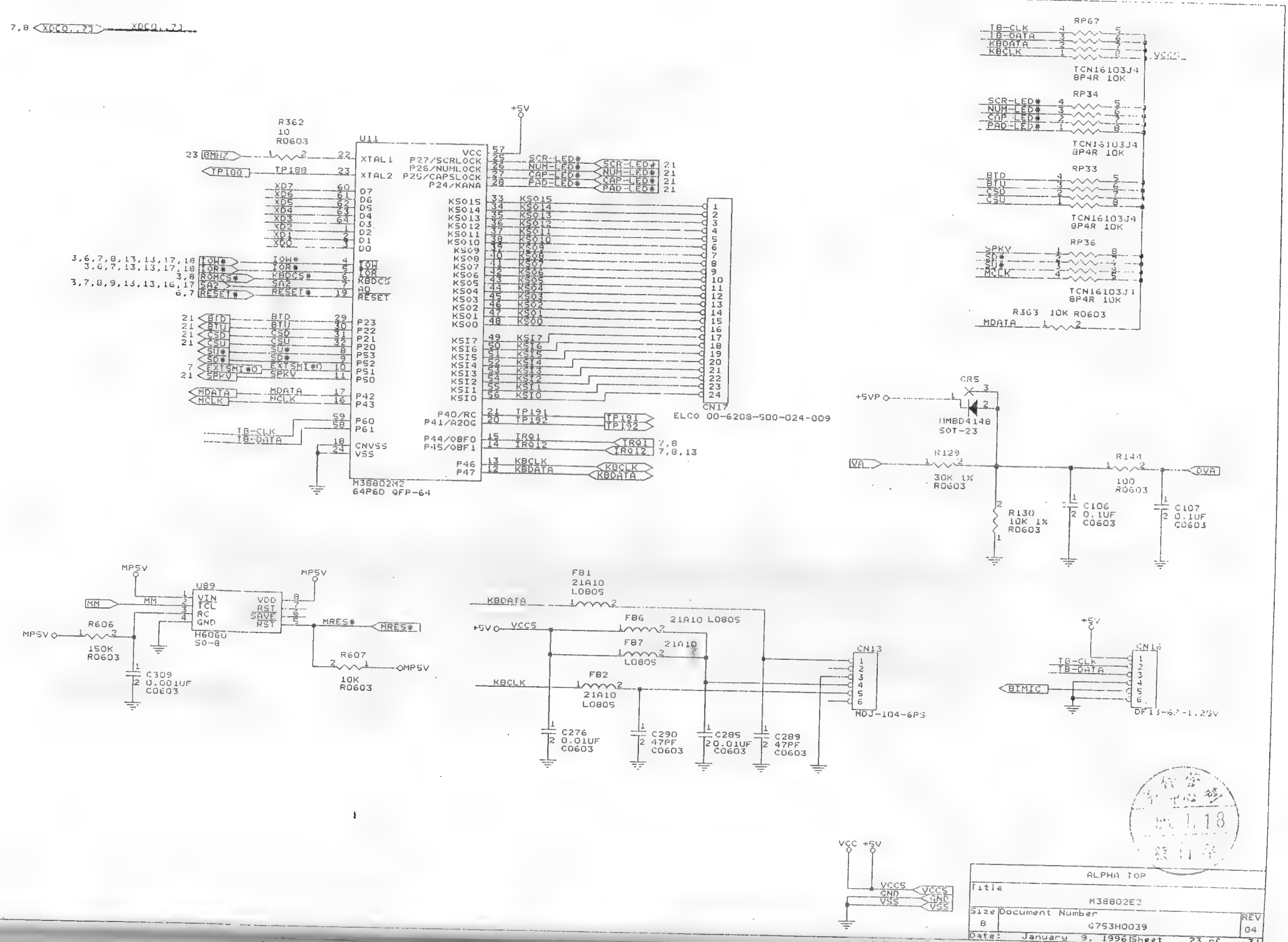

U11
M38802M2
64P6D QFP-64
CN17
ELCO 00-6208-500-024-009
RP67
TCN16103J4
8P4R 10K
RP34
RP33
RP36
R363 10K R0603
CR5
MMBD4148
SOT-23
R129
30K 1%
R0603
R130
10K 1%
R0603
R144
100
R0603
C106
0.1UF
C0603
C107
0.1UF
C0603
U89
H6060
SO-8
R606
150K
R0603
C309
0.001UF
C0603
R607
10K
R0603
F81
21A10
L0805
F86
21A10 L0805
F87
21A10
L0805
F82
21A10
L0805
C276
0.01UF
C0603
C290
47PF
C0603
C285
0.01UF
C0603
C289
47PF
C0603
CN13
MDJ-104-6PS
CN16
BIMIC
ALPHA TOP
Title
M38802E2
Size
B
Document Number
G753H0039
REV
04
Date: January 9, 1996
Sheet 23 of 31

| DOZE# | S0 | S1 | S2 | SLO | SL1 | MCLK2 | SP0 | SP1 | B10UT |
|---|---|---|---|---|---|---|---|---|---|
| 0 | X | X | X | 0 | 0 | 0 | 0 | 0 | 33MHZ |
| 0 | X | X | X | 1 | 0 | 8MHZ | 0 | 1 | 25MHZ |
| 0 | X | X | X | 0 | 1 | 16MHZ | 1 | 0 | 16MHZ |
| 0 | X | X | X | 1 | 1 | 33.3MHZ | 1 | 1 | POWER DOWN |
| 1 | 0 | 0 | 0 | X | X | 66.6MHZ | | | |
| 1 | 1 | 0 | 0 | | | 80MHZ | | | |
| 1 | 0 | 1 | 0 | | | 60MHZ | | | |
| 1 | 1 | 1 | 0 | | | 25MHZ | | | |
| 1 | 0 | 0 | 1 | | | 33.3MHZ | | | |
| 1 | 1 | 0 | 1 | | | 40MHZ | | | |
| 1 | 0 | 1 | 1 | | | 50MHZ | | | |
| 1 | 1 | 1 | 1 | | | POWER DOWN | | | |

| DOZE# | S0 | S1 | S2 | SLO | SL1 | MCLK2 | B10UT |
|---|---|---|---|---|---|---|---|
| 0 | X | X | X | 0 | 0 | 0 | 0 |
| 0 | X | X | X | 1 | 0 | 8MHZ | 4MHZ |
| 0 | X | X | X | 0 | 1 | 16MHZ | 8MHZ |
| 0 | X | X | X | 1 | 1 | 33.3MHZ | 16.7MHZ |
| 1 | 0 | 0 | 0 | X | X | 66.6MHZ | 33.3MHZ |
| 1 | 1 | 0 | 0 | | | 80MHZ | 40MHZ |
| 1 | 0 | 1 | 0 | | | 60MHZ | 30MHZ |
| 1 | 1 | 1 | 0 | | | 25MHZ | 12.5MHZ |
| 1 | 0 | 0 | 1 | | | 33.3MHZ | 16.7MHZ |
| 1 | 1 | 0 | 1 | | | 40MHZ | 20MHZ |
| 1 | 0 | 1 | 1 | | | 50MHZ | 25MHZ |
| 1 | 1 | 1 | 1 | | | POWER DOWN | POWER DOWN |

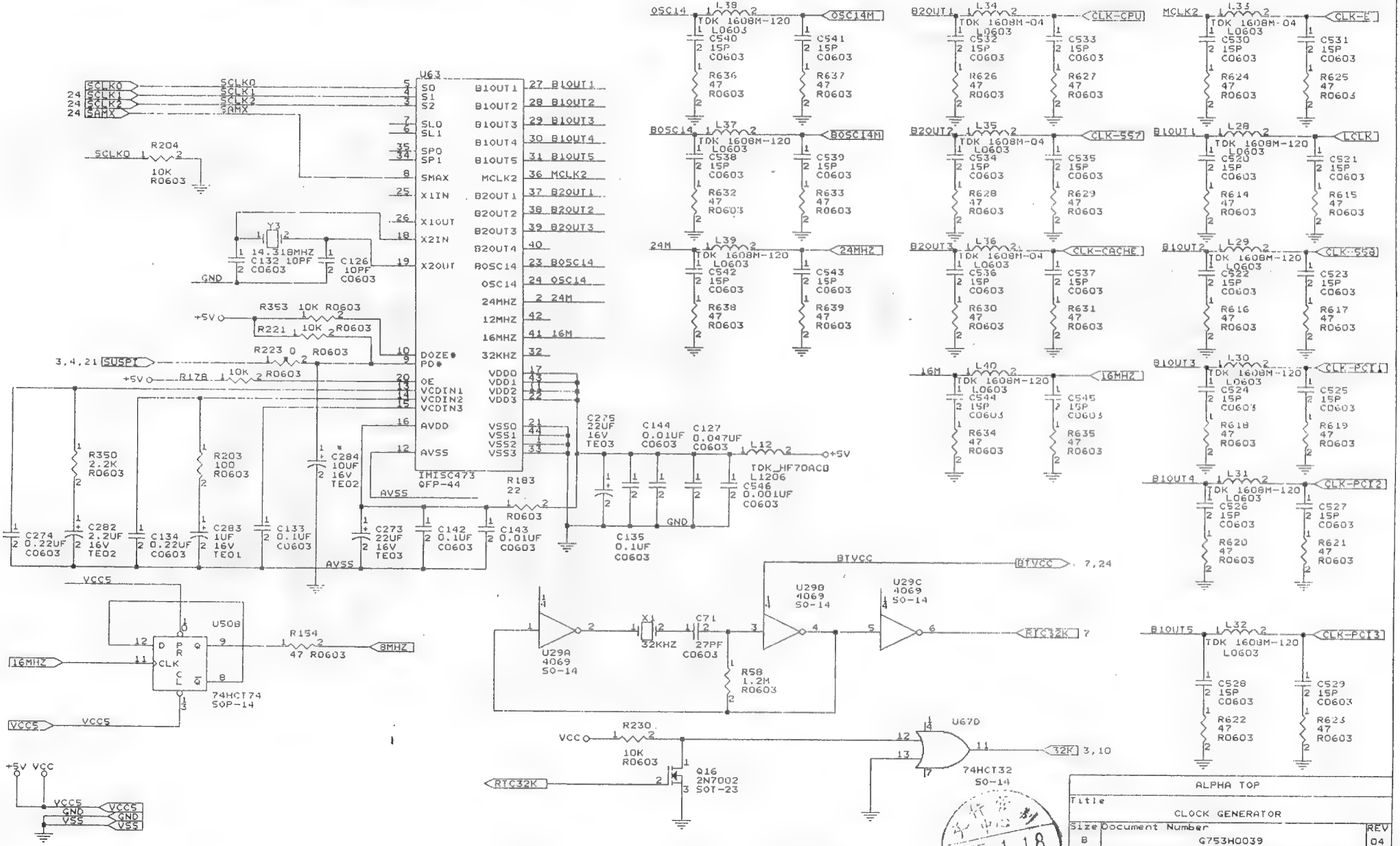


| | | | |
|---|---|---|---|
| ALPHA TOP | | | |
| Title: CLOCK GENERATOR | | | |
| Size: B | Document Number: G753H0039 | | REV: 04 |
| Date: January 10, 1996 | Sheet: 24 of | 31 | |

# BYPASS AND TANTALUM CAPACITORS

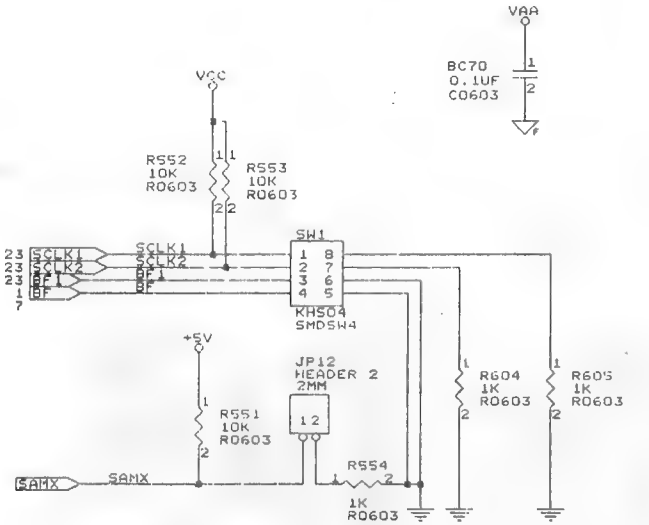


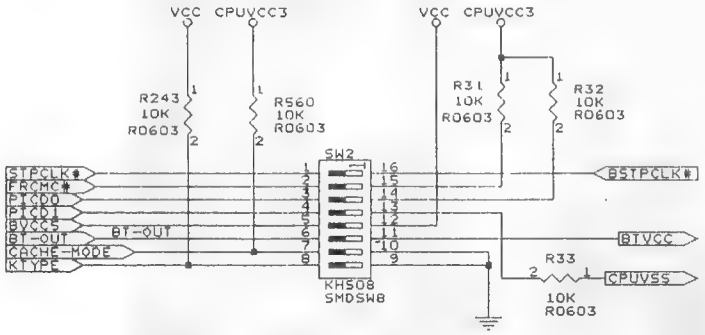


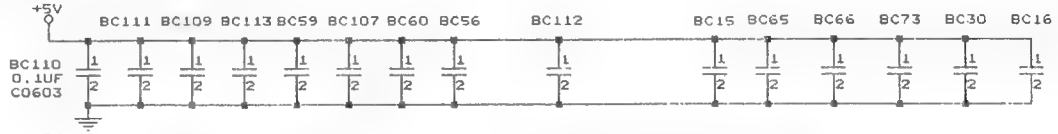


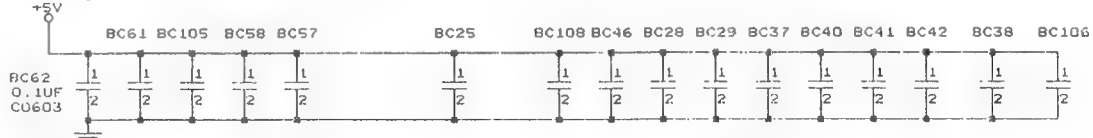


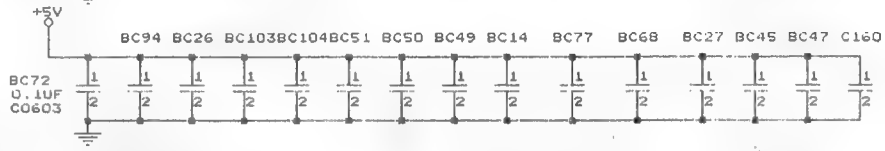


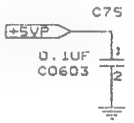


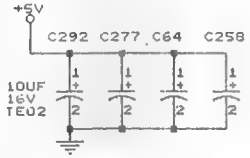


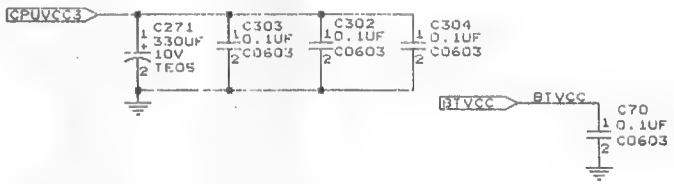


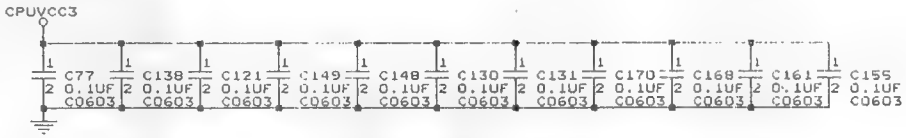


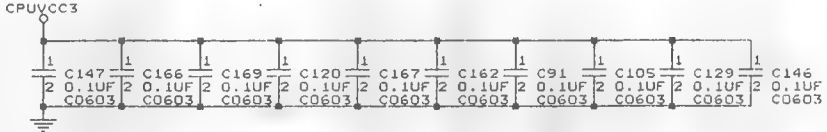


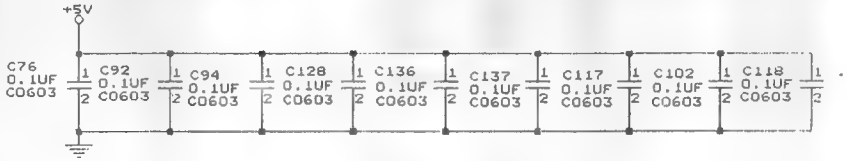


50

| SYNC PCI BUS | | |
|---|---|---|
| PS4C-75 | PS4C-90 | PS4C-100 |
| SW1-1 OFF | SW1-1 OFF | SW1-1 ON |
| SW1-2 OFF | SW1-2 ON | SW1-2 ON |
| SW1-3 OFF | SW1-3 OFF | SW1-3 OFF |
| SW1-4 OFF | SW1-4 OFF | SW1-4 OFF |
| SW2-6 ON | SW2-6 ON | SW2-6 ON |
| JP12 OFF | JP12 OFF | JP12 OFF |

| ASYNC PCI BUS | | |
|---|---|---|
| PS4C-75 | PS4C-90 | PS4C-100 |
| SW1-1 OFF | SW1-1 OFF | SW1-1 ON |
| SW1-2 OFF | SW1-2 ON | SW1-2 ON |
| SW1-3 OFF | SW1-3 OFF | SW1-3 OFF |
| SW1-4 OFF | SW1-4 OFF | SW1-4 OFF |
| SW2-6 ON | SW2-6 ON | SW2-6 ON |
| JP12 ON | JP12 ON | JP12 ON |

| CYRIX CPU INT. CLK | |
|---|---|
| 1.5X | SW1-3 ON<br>SW1-4 ON |
| 2X | SW1-3 OFF<br>SW1-4 ON |
| 3X | SW1-3 OFF<br>SW1-4 OFF |
| 4X | SW1-3 ON<br>SW1-4 OFF |

| INTEL CPU INT. CLK | |
|---|---|
| 1.5X | SW1-3 OFF<br>SW1-4 OFF |
| 2X | SW1-3 OFF<br>SW1-4 ON |
| 3X | SW1-3 ON<br>SW1-4 OFF |
| 4X | SW1-3 ON<br>SW1-4 ON |

J. KB: SW2-8 ON

| INTEL | M1 | K5 |
|---|---|---|
| SW2-1 ON | SW2-1 OFF | SW2-1 ON |
| SW2-2 ON | SW2-2 OFF | SW2-2 ON |
| SW2-3 ON | SW2-3 OFF | SW2-3 OFF |
| SW2-4 ON | SW2-4 OFF | SW2-4 OFF |
| SW2-5 ON | SW2-5 OFF | SW2-5 OFF |
| SW2-7 OFF | SW2-7 ON | |

| | CPU2.9V | CPU3.3V |
|---|---|---|
| SW3-1 | OFF | OFF |
| SW3-2 | ON | OFF |
| SW3-3 | OFF | ON |
| SW3-4 | OFF | OFF |

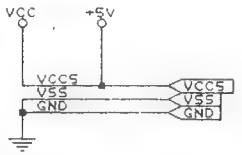

ALPHA TOP

Title
BYPASS, BULK CAPS., CPU TYPE SELECT SWITCHES

| Size | Document Number | REV |
|---|---|---|
| B | G753H0039 | 04 |

Date: January 9, 1996 Sheet 25 of 31

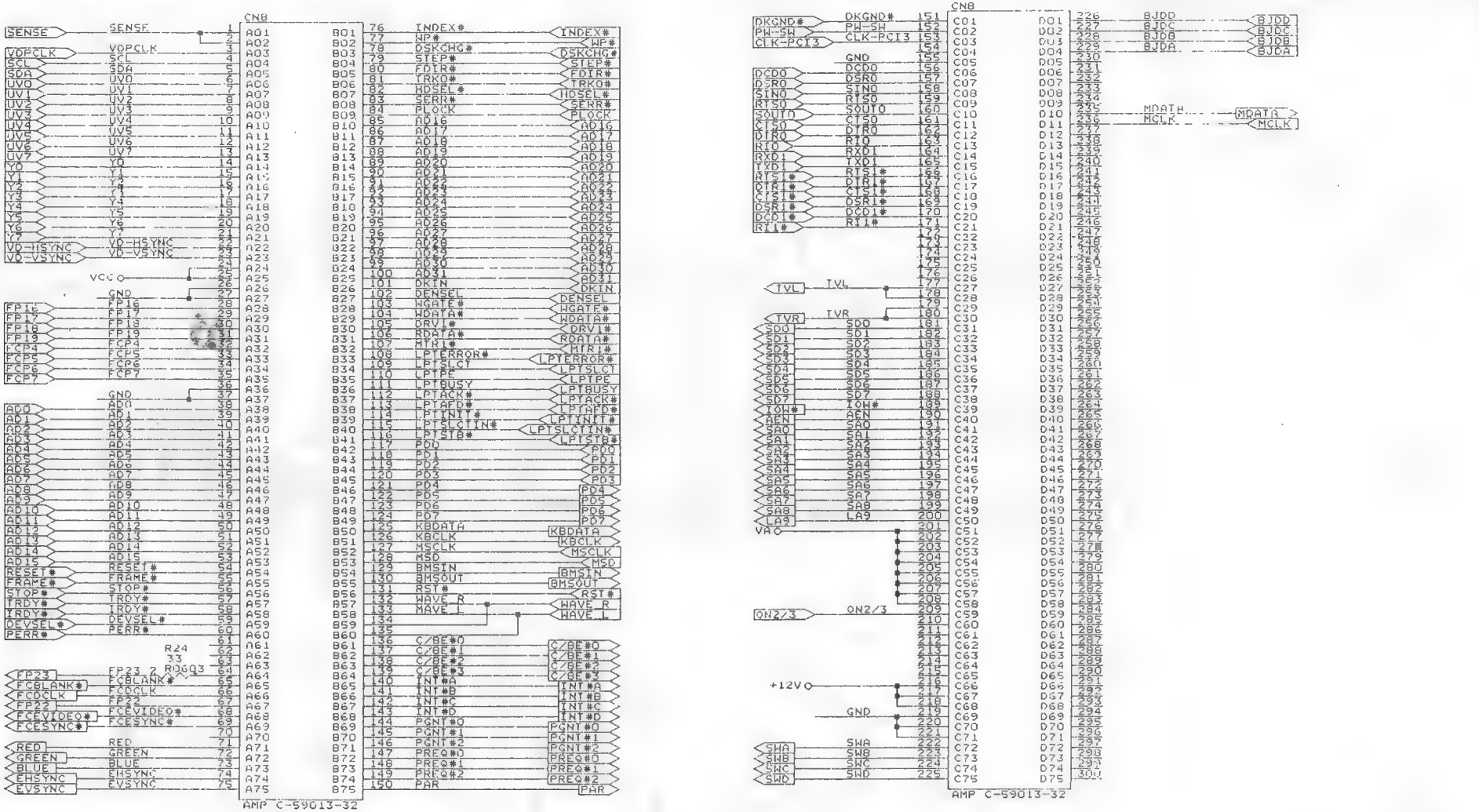





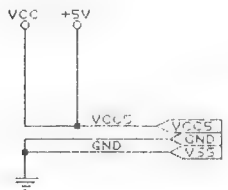


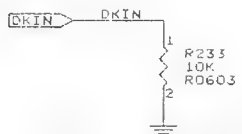


| | | |
|---|---|---|
| ALPHA TOP | | |
| Title: DOCKING CONN. | | |
| Size: B | Document Number: G753H0039 | REV: 04 |
| Date: January 9, 1996 | Sheet 26 of 31 | |

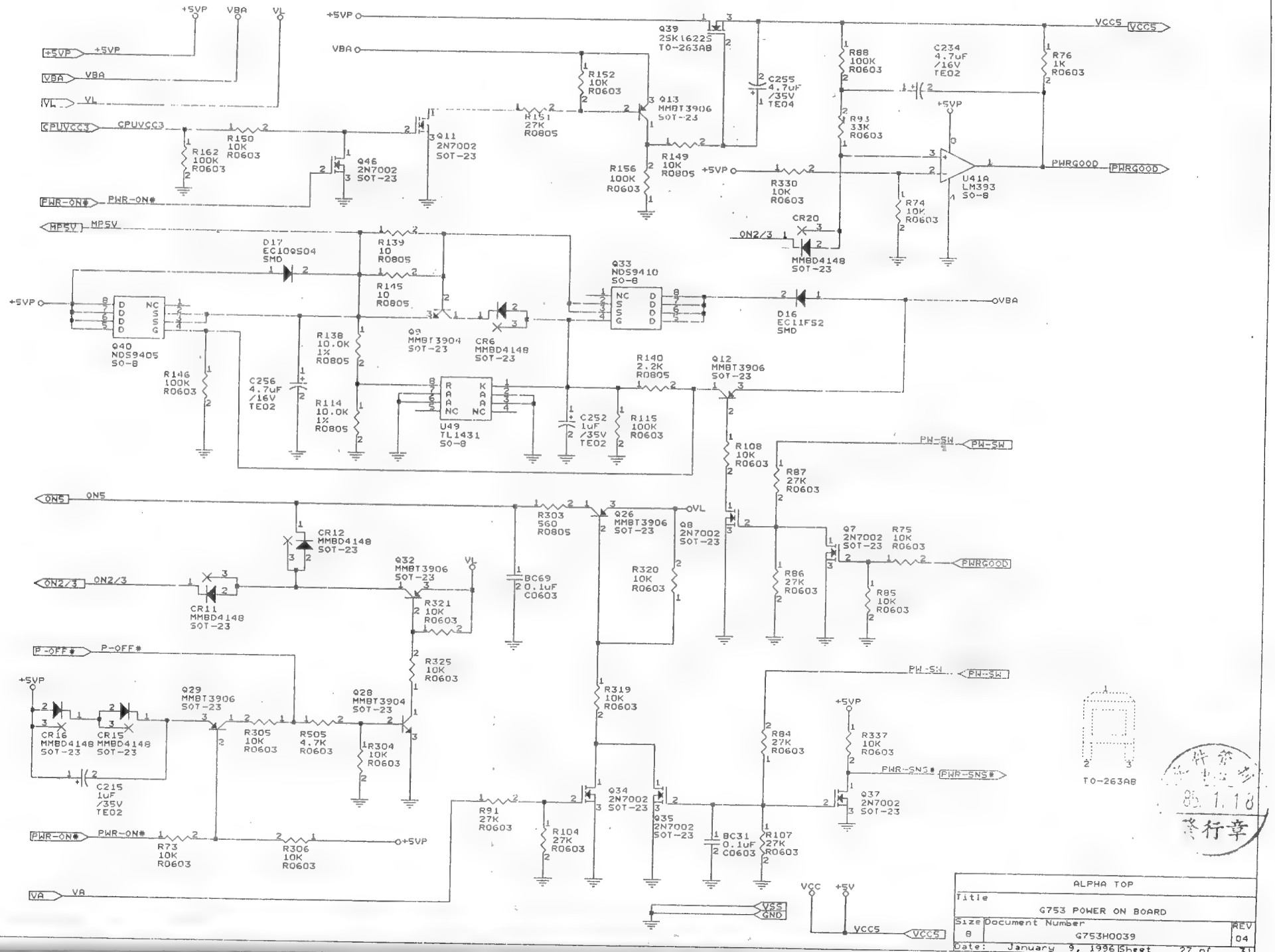
+5VP
VBA
VL
CPUVCC3
PWR-ON#
MP5V
ON5
ON2/3
P-OFF#
PW-SW
PWRGOOD
PWR-SNS#
VA
VCC5
VSS
GND
VCC
+5V
Q39 2SK1622S TO-263AB
Q13 MMBT3906 SOT-23
Q11 2N7002 SOT-23
Q46 2N7002 SOT-23
Q33 NDS9410 SO-8
Q40 NDS9405 SO-8
Q9 MMBT3904 SOT-23
Q12 MMBT3906 SOT-23
Q26 MMBT3906 SOT-23
Q8 2N7002 SOT-23
Q32 MMBT3906 SOT-23
Q29 MMBT3906 SOT-23
Q28 MMBT3904 SOT-23
Q34 2N7002 SOT-23
Q35 2N7002 SOT-23
Q7 2N7002 SOT-23
Q37 2N7002 SOT-23
U41A LM393 SO-8
U49 TL1431 SO-8
D17 EC10QS04 SMD
D16 EC11FS2 SMD
CR20 MMBD4148 SOT-23
CR6 MMBD4148 SOT-23
CR12 MMBD4148 SOT-23
CR11 MMBD4148 SOT-23
CR16 MMBD4148 SOT-23
CR15 MMBD4148 SOT-23
R152 10K R0603
R151 27K R0805
R149 10K R0805
R156 100K R0603
R88 100K R0603
R93 33K R0603
R330 10K R0603
R74 10K R0603
R76 1K R0603
R162 100K R0603
R150 10K R0603
R139 10 R0805
R145 10 R0805
R138 10.0K 1% R0805
R114 10.0K 1% R0805
R146 100K R0603
R140 2.2K R0805
R115 100K R0603
R108 10K R0603
R87 27K R0603
R86 27K R0603
R85 10K R0603
R75 10K R0603
R303 560 R0805
R320 10K R0603
R321 10K R0603
R325 10K R0603
R319 10K R0603
R84 27K R0603
R337 10K R0603
R91 27K R0603
R104 27K R0603
R107 27K R0603
R305 10K R0603
R505 4.7K R0603
R304 10K R0603
R73 10K R0603
R306 10K R0603
C255 4.7uF /35V TE04
C234 4.7uF /16V TE02
C256 4.7uF /16V TE02
C252 1uF /35V TE02
C215 1uF /35V TE02
BC69 0.1uF C0603
BC31 0.1uF C0603
TO-263AB
85.1.16
ALPHA TOP
G753 POWER ON BOARD
G753H0039
REV 04
January 9, 1996
Sheet 22 of 31

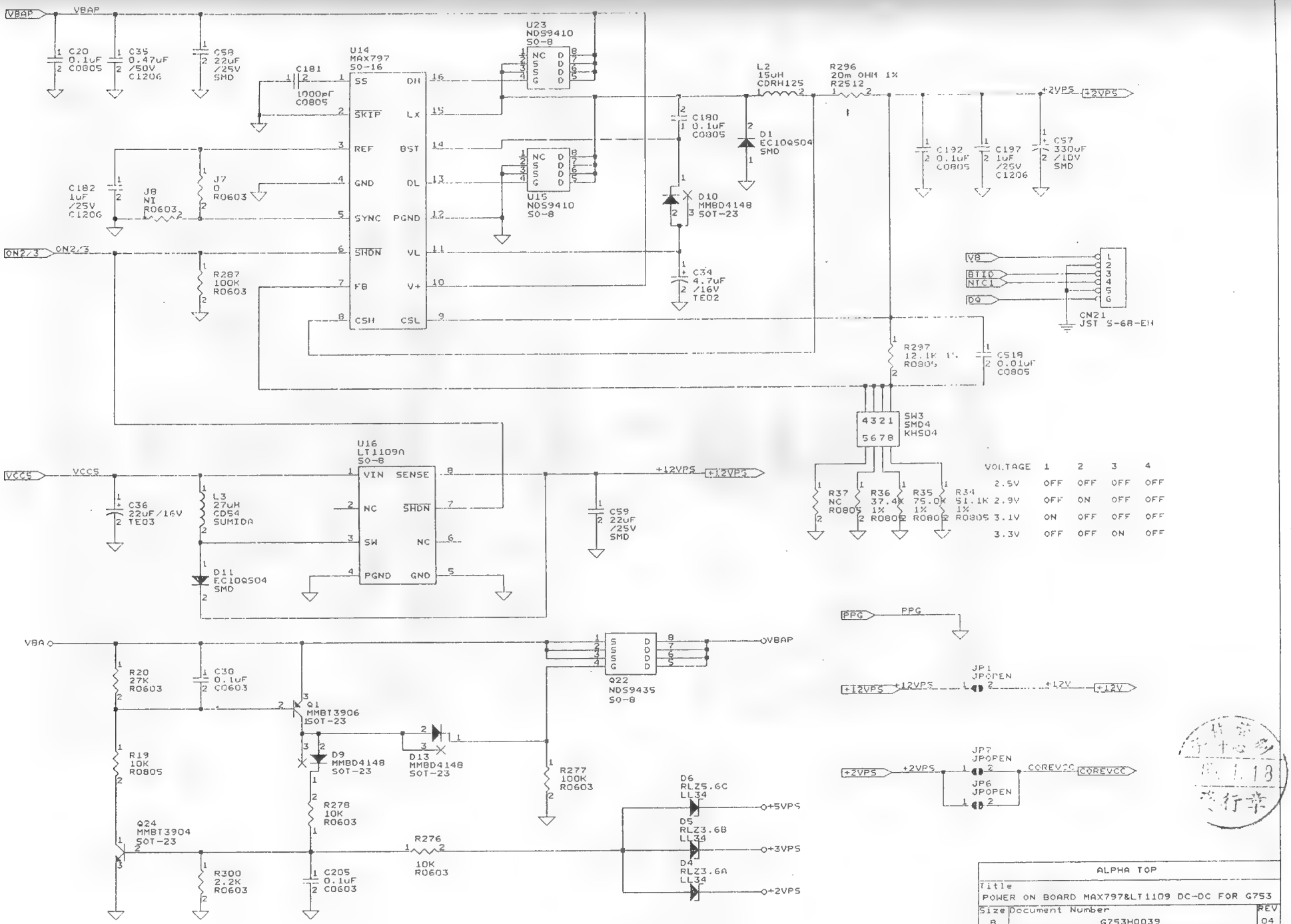


| | | | |
|---|---|---|---|
| ALPHA TOP | | | |
| Title: POWER ON BOARD MAX797&LT1109 DC-DC FOR G753 | | | |
| Size: B | Document Number: G753H0039 | | REV: 04 |
| Date: January 9, 1996 | Sheet 28 of 31 | | |

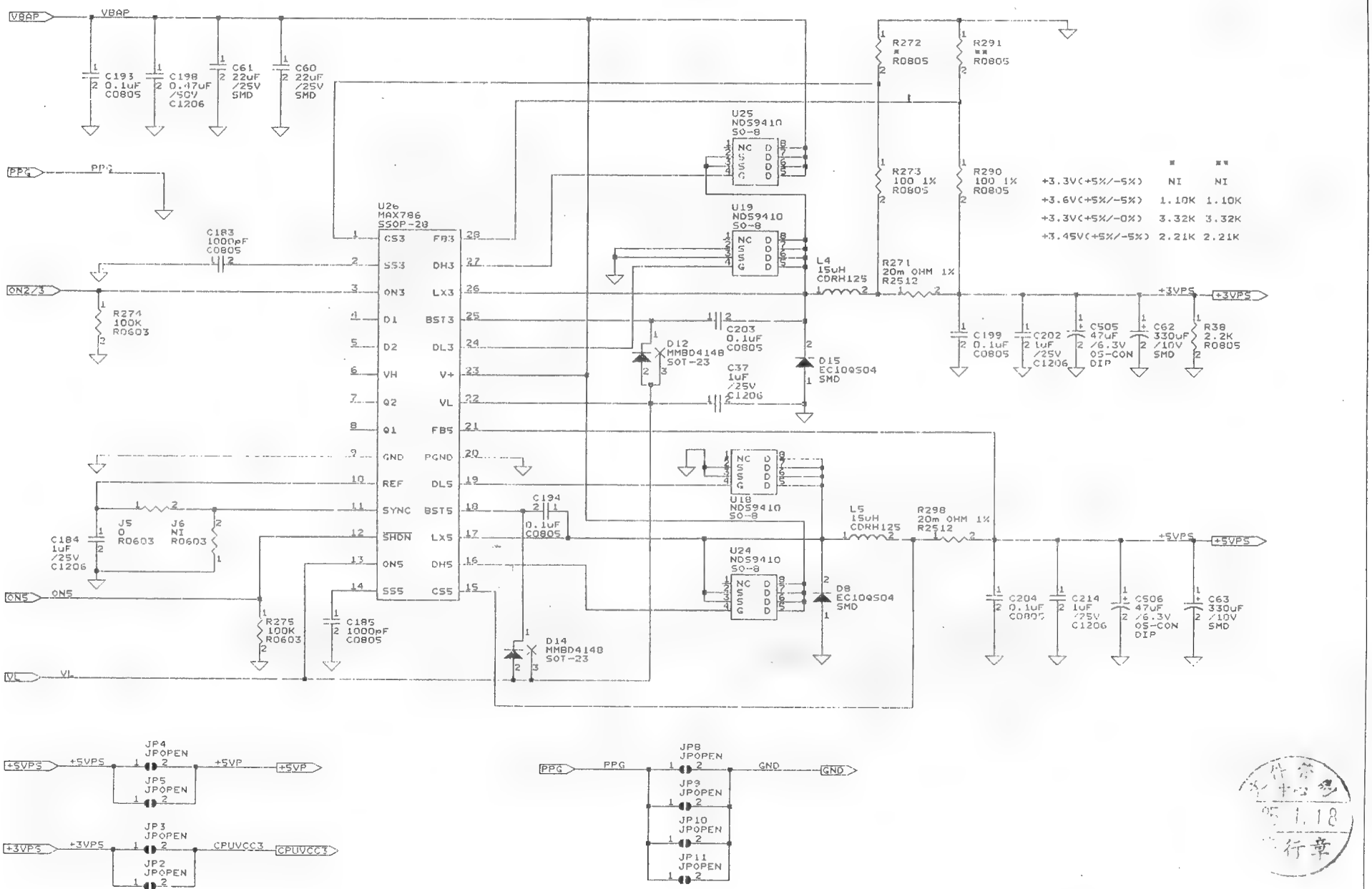


| | | |
|---|---|---|
| ALPHA-TOP | | |
| FILE NAME : G753-28.SCH | | |
| Title: POWER ON BOARD USE MAX786 DC-DC FOR G753 | | |
| Size: B | Document Number: G753H0039 | REV: 04 |
| Date: January 9, 1996 | Sheet 29 of 31 | |

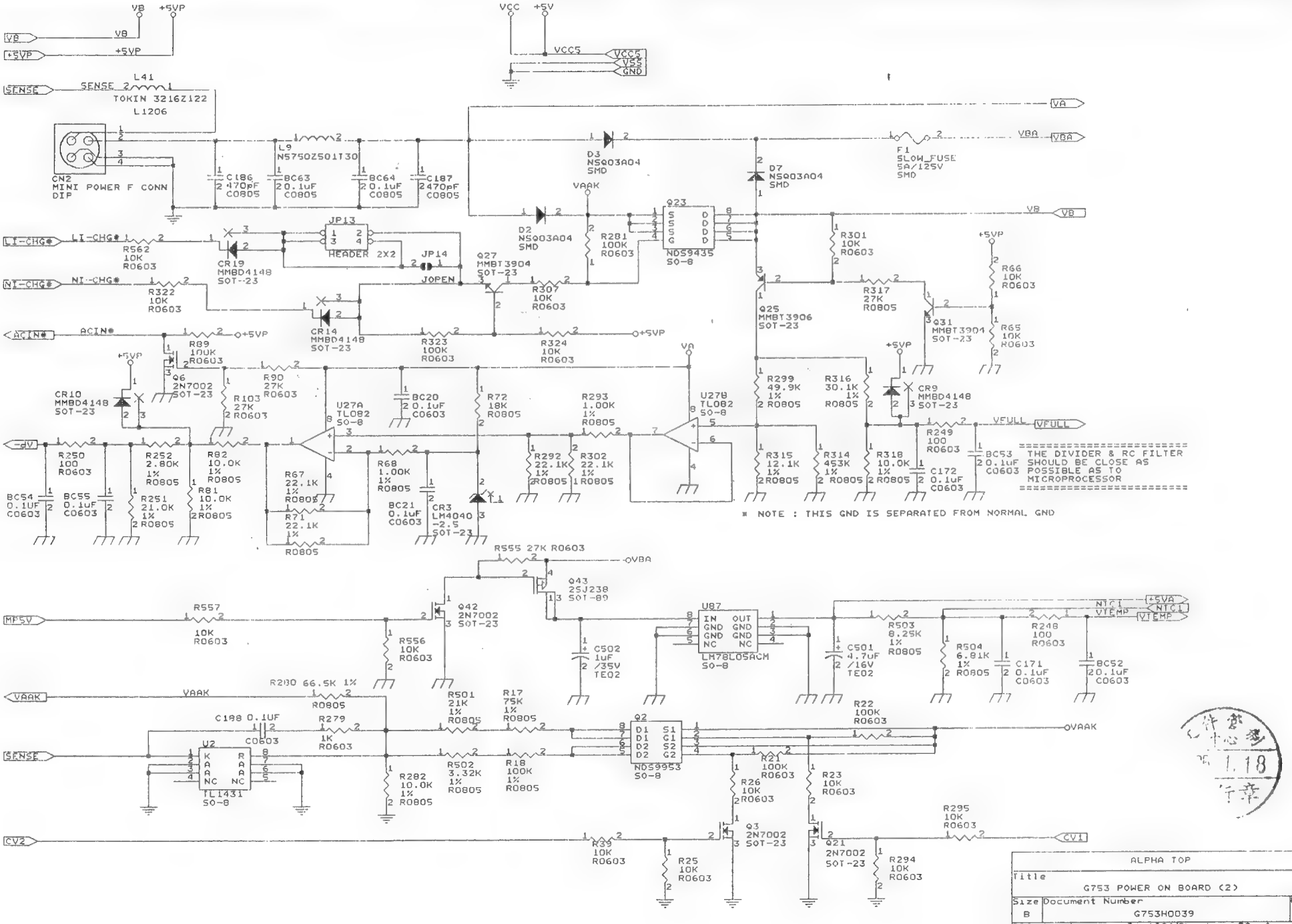
VB
+5VP
VCC
+5V
VCC5
VSS
GND
SENSE
L41
TOKIN 3216Z122
L1206
CN2
MINI POWER F CONN
DIP
C186 470pF C0805
L9 NS75OZ501T30
BC63 0.1uF C0805
BC64 0.1uF C0805
C187 2470pF C0805
D3 NSQ03A04 SMD
D7 NSQ03A04 SMD
D2 NSQ03A04 SMD
F1 SLOW_FUSE 5A/125V SMD
VA
VBA
VAAK
Q23 NDS9435 SO-8
R281 100K R0603
R301 10K R0603
JP13 HEADER 2X2
JP14
JOPEN
LI-CHG*
R562 10K R0603
CR19 MMBD4148 SOT-23
NI-CHG*
R322 10K R0603
Q27 MMBT3904 SOT-23
R307 10K R0603
CR14 MMBD4148 SOT-23
R323 100K R0603
R324 10K R0603
Q25 MMBT3906 SOT-23
R317 27K R0805
Q31 MMBT3904 SOT-23
R66 10K R0603
R65 10K R0603
ACIN*
R89 100K R0603
Q6 2N7002 SOT-23
R90 27K R0603
R103 27K R0603
CR10 MMBD4148 SOT-23
U27A TL082 SO-8
U27B TL082 SO-8
BC20 0.1uF C0603
R72 18K R0805
R293 1.00K 1% R0805
R299 49.9K 1% R0805
R316 30.1K 1% R0805
CR9 MMBD4148 SOT-23
R249 100 R0603
VFULL
BC53 0.1uF C0603
THE DIVIDER & RC FILTER SHOULD BE CLOSE AS POSSIBLE AS TO MICROPROCESSOR
-6V
R250 100 R0603
R252 2.80K 1% R0805
R82 10.0K 1% R0805
R251 21.0K 1% R0805
R81 10.0K 1% R0805
BC54 0.1uF C0603
BC55 0.1uF C0603
R67 22.1K 1% R0805
R68 1.00K 1% R0805
R71 22.1K 1% R0805
BC21 0.1uF C0603
CR3 LM4040 -2.5 SOT-23
R292 22.1K 1% R0805
R302 22.1K 1% R0805
R315 12.1K 1% R0805
R314 453K 1% R0805
R318 10.0K 1% R0805
C172 0.1uF C0603
* NOTE : THIS GND IS SEPARATED FROM NORMAL GND
R555 27K R0603
Q43 2SJ238 SOT-89
MFSV
R557 10K R0603
Q42 2N7002 SOT-23
R556 10K R0603
C502 1uF /35V TE02
U87 LM78L05ACM SO-8
C501 4.7uF /16V TE02
R503 8.25K 1% R0805
R504 6.81K 1% R0805
R248 100 R0603
NTC1
VTEMP
C171 0.1uF C0603
BC52 0.1uF C0603
R200 66.5K 1% R0805
R501 21K 1% R0805
R17 75K 1% R0805
R22 100K R0603
C198 0.1UF C0603
R279 1K R0603
U2 TL1431 SO-8
Q2 NDS9953 SO-8
R502 3.32K 1% R0805
R18 100K 1% R0805
R282 10.0K 1% R0805
R21 100K R0603
R26 10K R0603
R23 10K R0603
R295 10K R0603
CV2
R39 10K R0603
Q3 2N7002 SOT-23
Q21 2N7002 SOT-23
R25 10K R0603
R294 10K R0603
CV1
ALPHA TOP
Title
G753 POWER ON BOARD (2)
Size B
Document Number G753H0039
REV 04
Date: January 9, 1996
Sheet 30 of 31

10/14/95 PCB P/N KK101002

1.TL074 FOR MIC AMP. SHEET 20

2.DMA FOR ECP MODE ,CHANGE 74HCT74 TO 74ACTQ374 . SHEET 7

3.MODEM INTERFACE SHARE WITH MPEG CONN. SHEET 14

11/16/95 PCB P/N KK101003

4.LCD POWER OFF SEQUENCE. SHEET 27

5.ADD PULL LOW R & C FOR CD,AUXB TO REDUCE NOICE. SHEET 19

6.ADD H0606 FOR WATCH DOG. SHEET 23

1/9/96 PCB P/N.KK101004

7.ADD FCC SOLUTION

8.INCREASE FAX/MODEM VOICE GAIN

85.1.18
發行章

| ALPHA TOP | | |
|---|---|---|
| Size B | Document Number G753H0039 | REV 04 |
| Date: January 9, 1996 | Sheet 31 of 31 | |

# Chapter 13 System Block Diagram

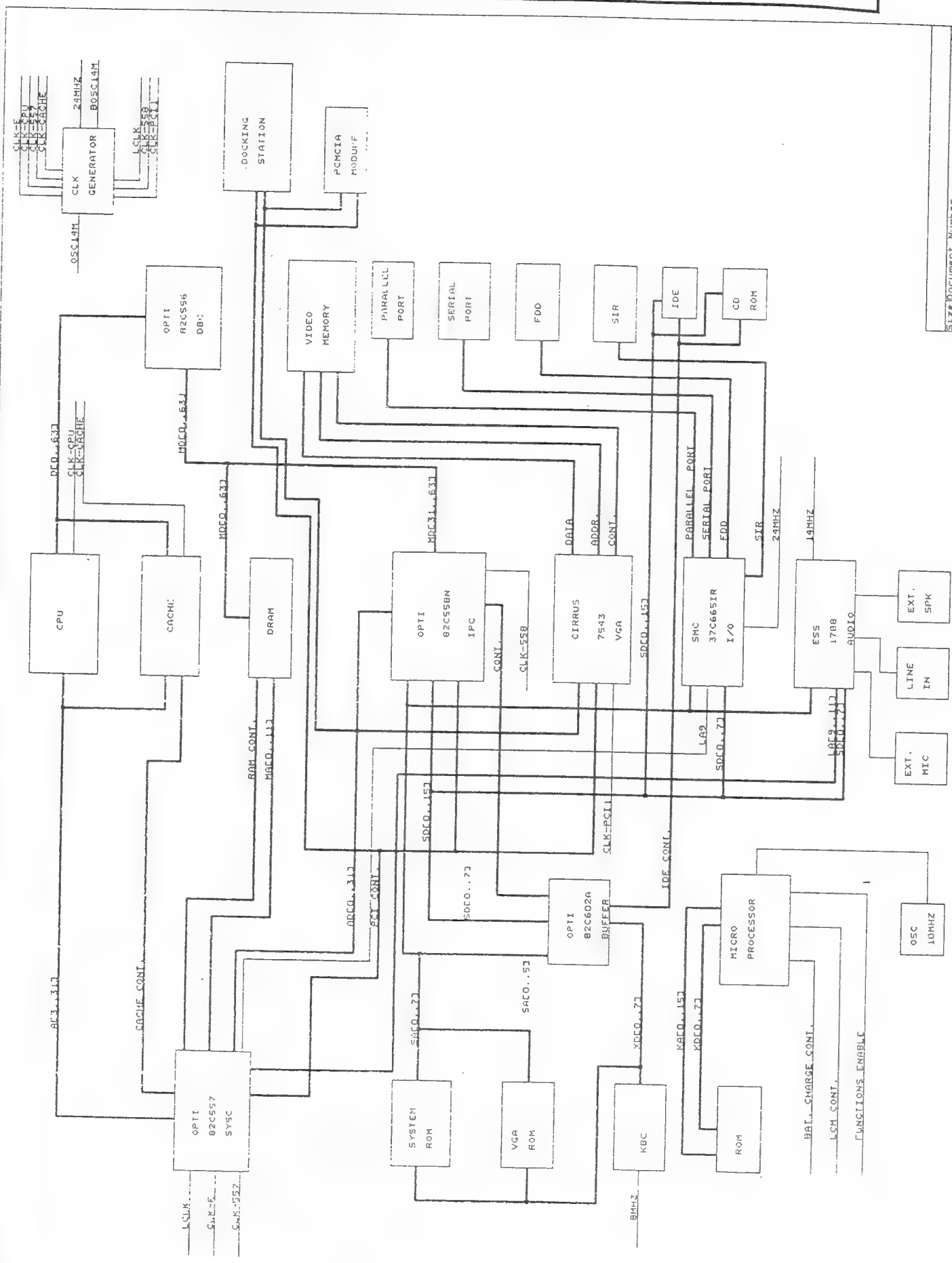

# Chapter 14 Main Board Layout Placement

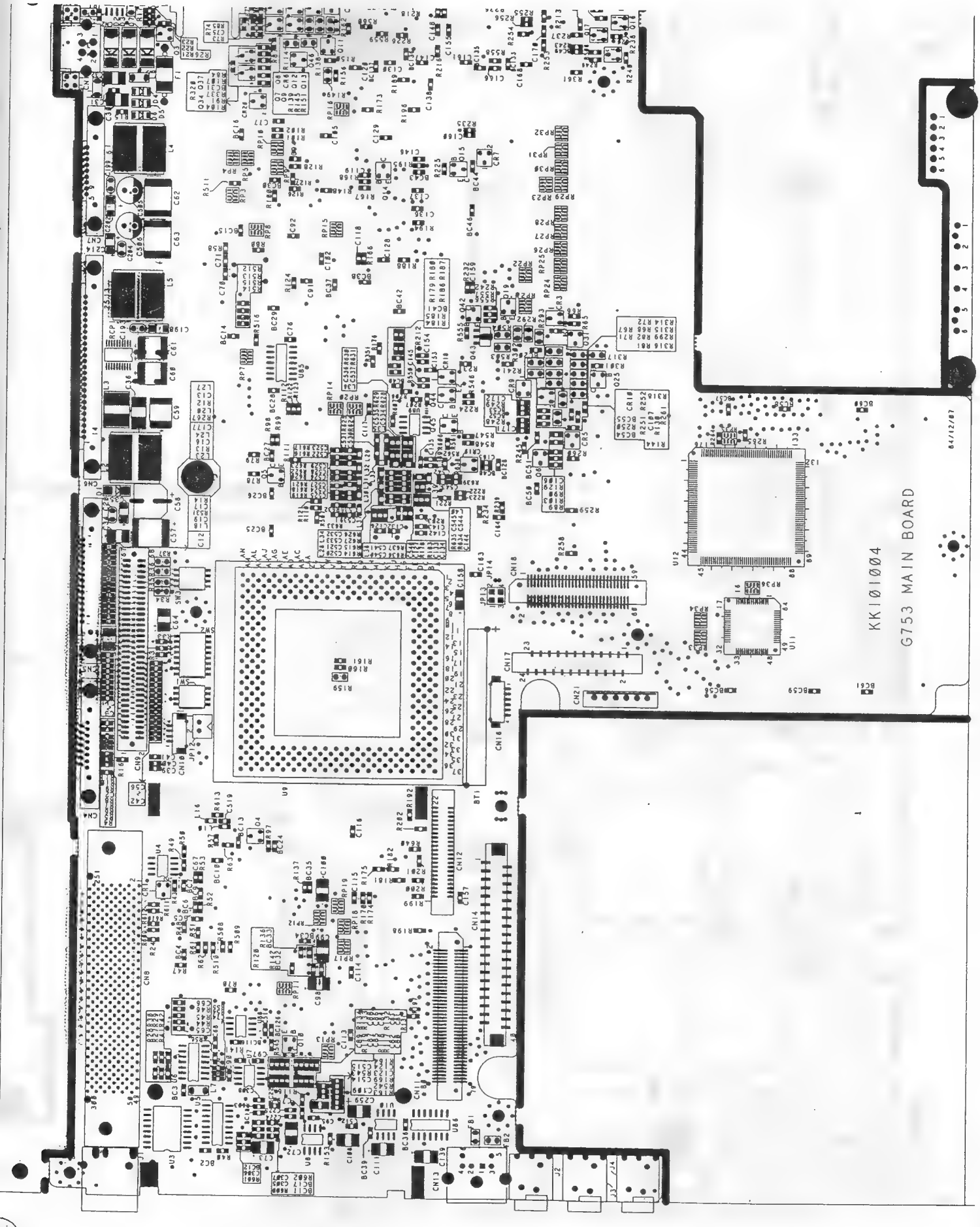

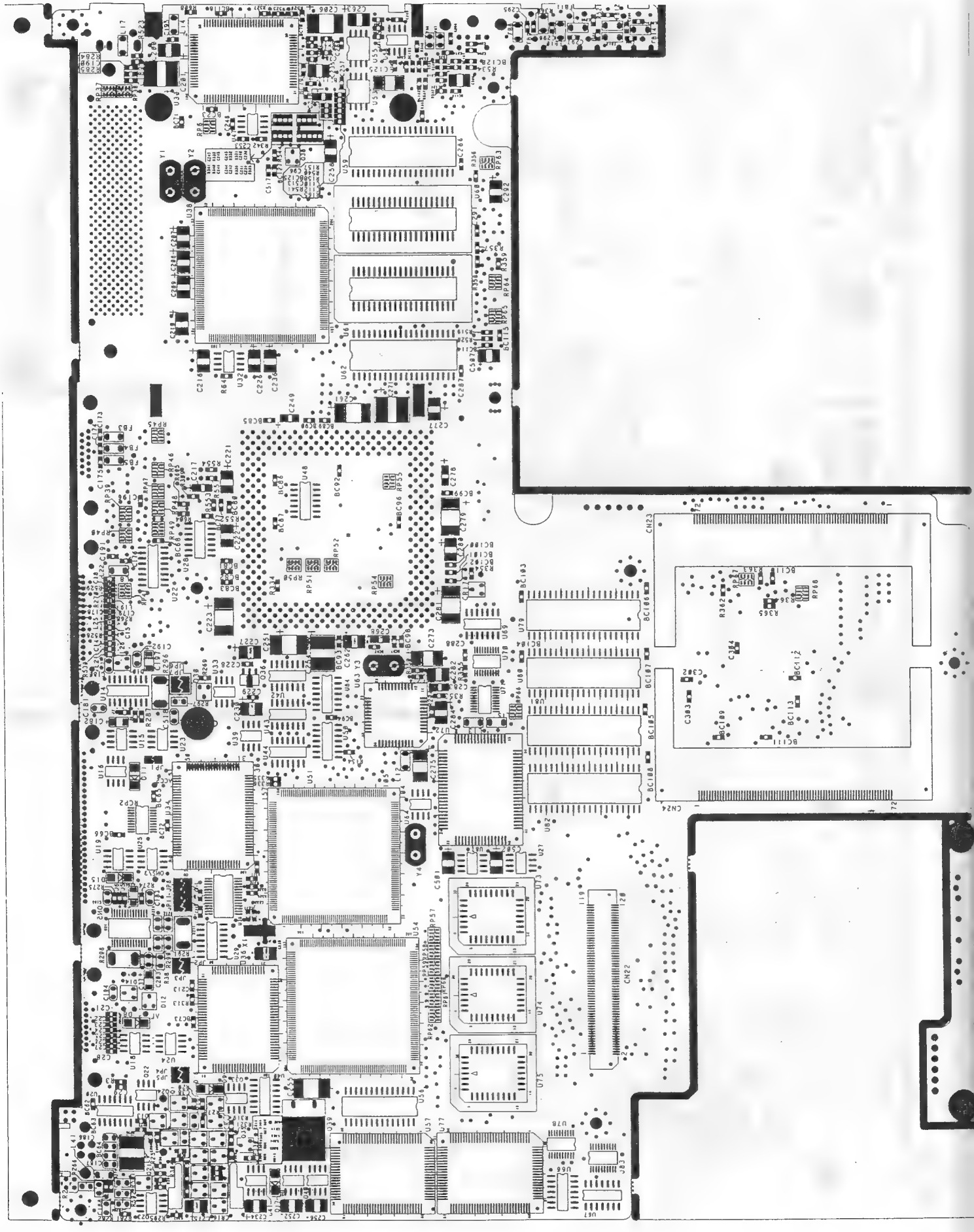

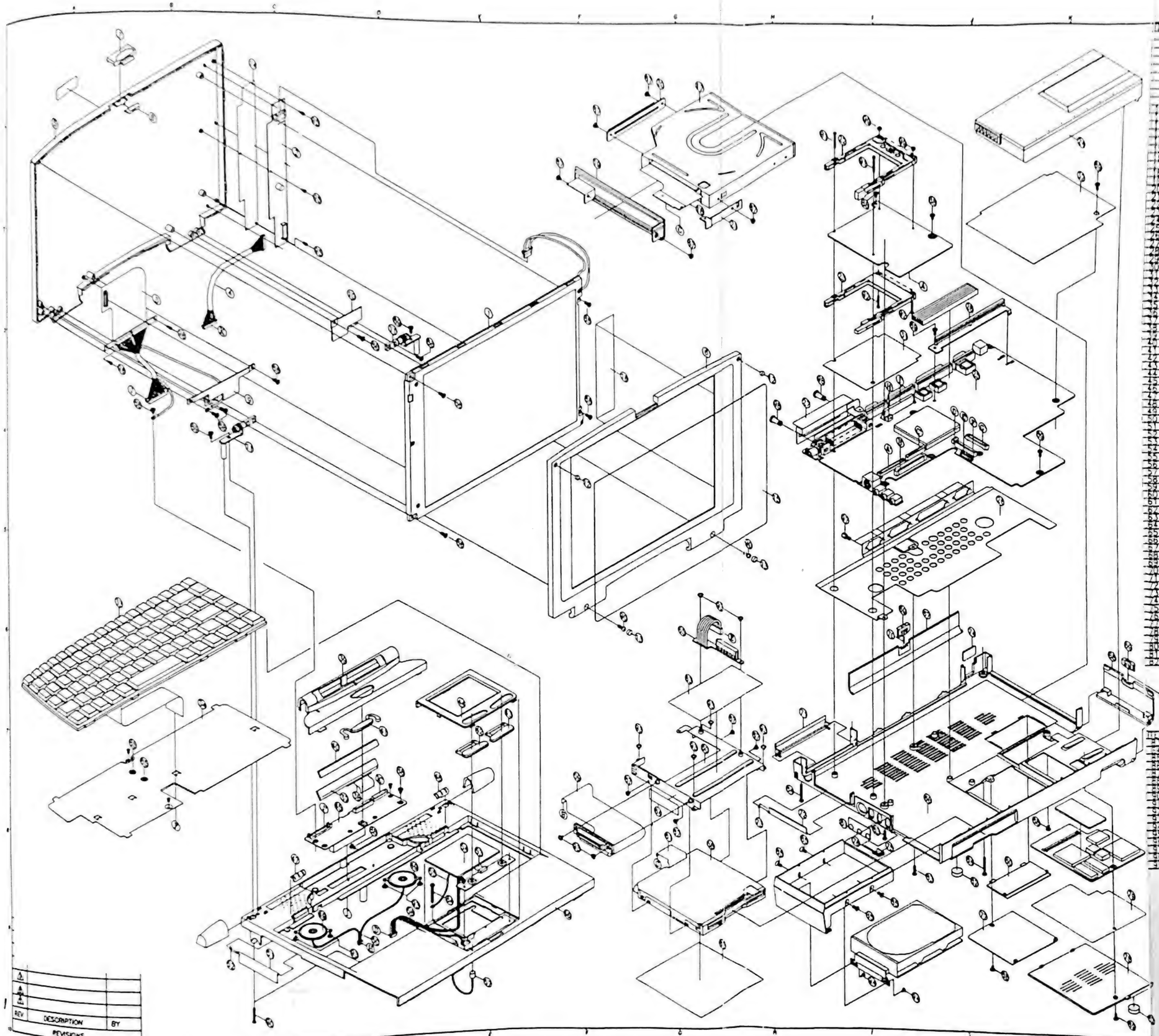

| ITEM | DESCRIPTION | QTY | PART NO |
|---|---|---|---|
| 1 | SCREW B=M2.6X0.45X6-NI | 1 | SCR1126 |
| 2 | SCREW B=M2.6X0.45X10-BLACK | 1 | SCR1127 |
| 3 | SCREW F=M3X0.5X4-BLACK | 4 | SCR1128 |
| 4 | SCREW I=M3X0.5X6-NI | 4 | SCR1129 |
| 5 | SCREW I=M2.6X0.45X4-NI | 6 | SCR1130 |
| 6 | SCREW I=M2.6X0.45X4-BLACK | 6 | SCR1131 |
| 7 | SCREW I=M2.6X0.45X6-BLACK | 6 | SCR1132 |
| 8 | SCREW P=M3X0.5X6-NI | 2 | SCR1133 |
| 9 | SCREW P=M2X0.4X4-NI | 2 | SCR1134 PAN |
| 10 | SCREW P=M2X0.4X12-NI | 2 | SCR1135 PAN |
| 11 | SCREW W=M2.6X0.45X4-NI | 4 | SCR1136 FLA |
| 12 | SCREW W=M2X0.4X4-NI | 4 | SCR1137 FLA |
| 13 | SCREW AP=B=2X4-NI | 3 | SCR1138 |
| 14 | SCREW AP=B=2X5-ZI | 3 | SCR1139 |
| 15 | HEX S=3.5X4-NI | 8 | SCR1140 |
| 16 | HEX S=M3X6-NI | 2 | SCR1141 |
| 17 | HEX NUT M2X4-NI | 2 | SCR1142 |

| ITEM | PART NO | DESCRIPTION |
|---|---|---|
| | | |
| | | |
| | | |

ALPHA-TOP CORPORATION

NAME G753

| TOL TABLE ANGLE | |
|---|---|
| DIM | TOL ± |
| 0~10 | 0.05 |
| 10~50 | 0.10 |
| 50~180 | 0.15 |
| 180 / | 0.20 |

MATERIAL
FINISH
THE 3RD PROJECTION
DWG NO.

UNIT MM
SCALE 0.4 / 1
DON'T SCALE DRAWING
DATE :

APPROVE
DESIGNED
CHECK
DRAWN
REV
SH. 1

| REV | DESCRIPTION | BY |
|---|---|---|
| | REVISIONS | |

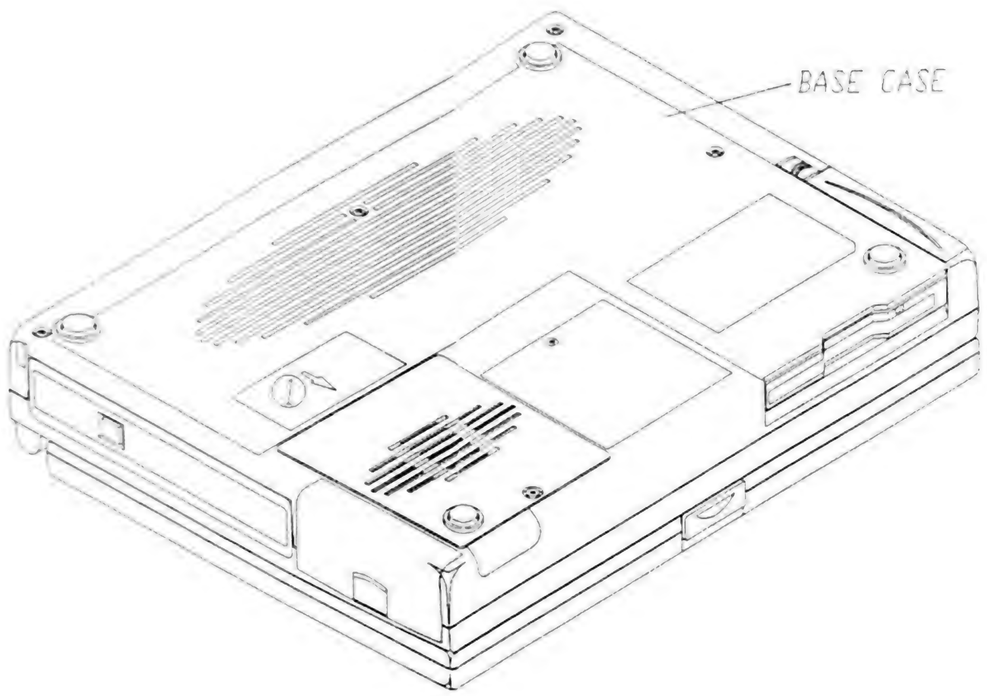


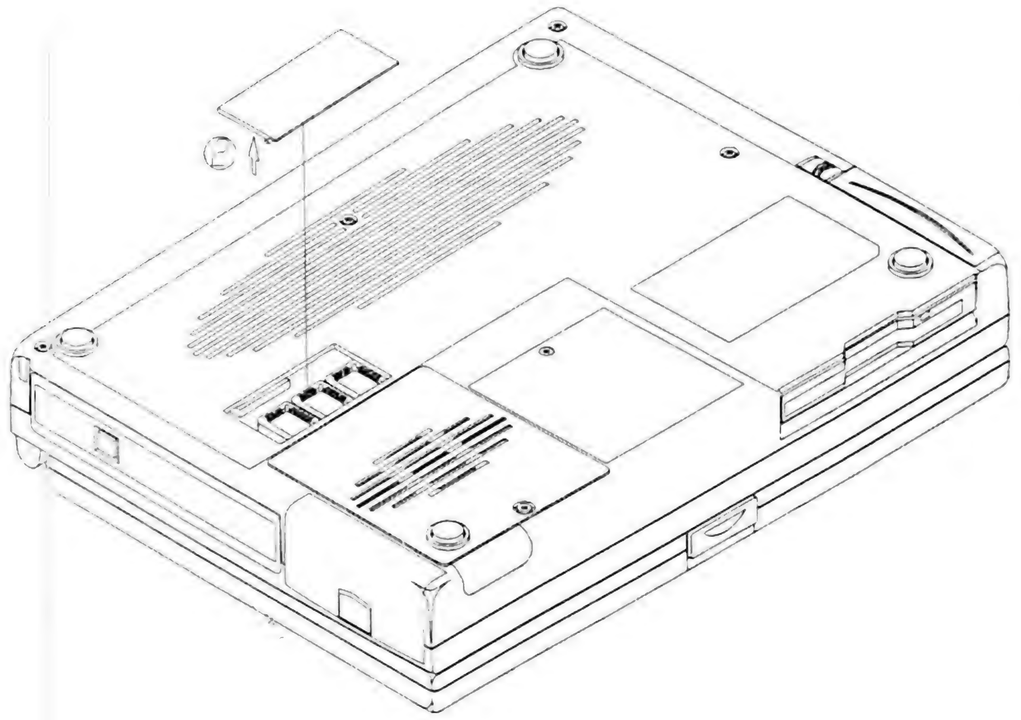


| NO | PART NAME | Q'TY |
|---|---|---|
| 1 | BIOS COVER | 1 |
| 2 | BIOS COVER | 1 |

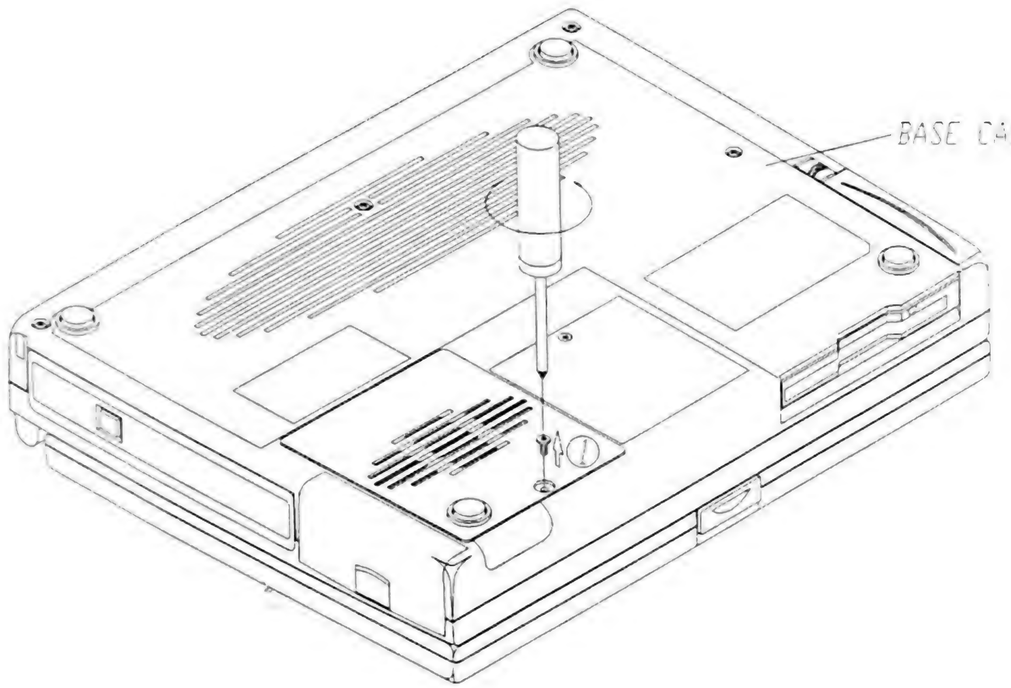


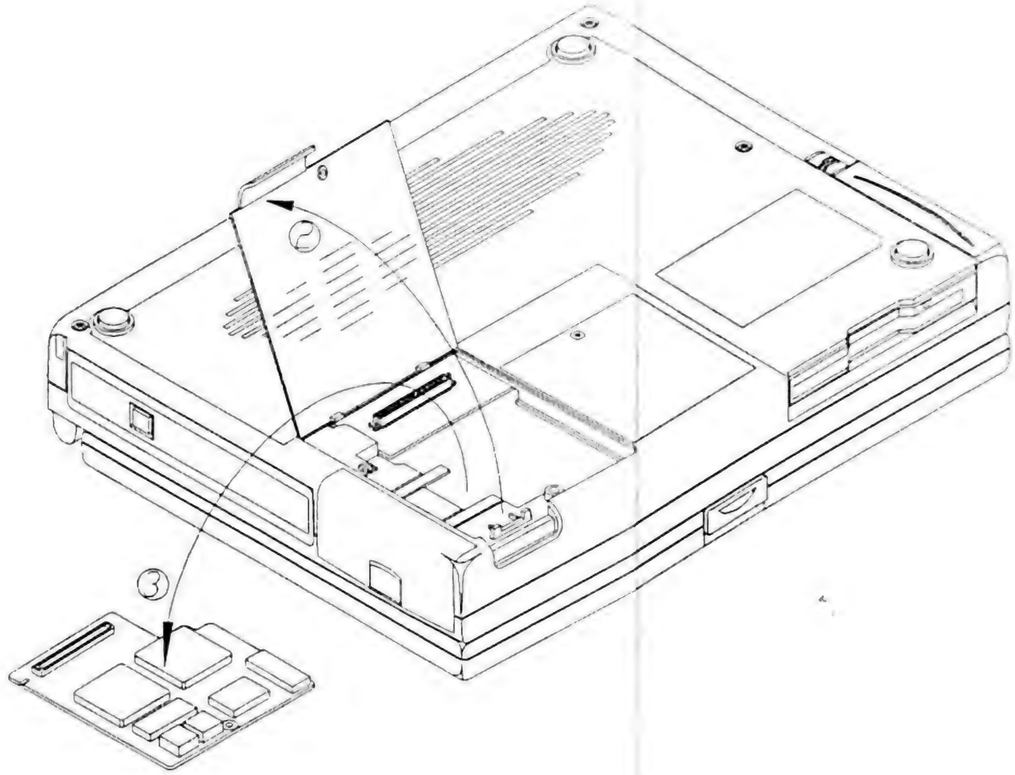


| NO | PART NAME | Q'TY |
|---|---|---|
| 1 | SCREW I-M2.6*0.45*6-BLACK | 1 |
| 2 | M-PEG COVER | 1 |
| 3 | M-PEG CARD | 1 |

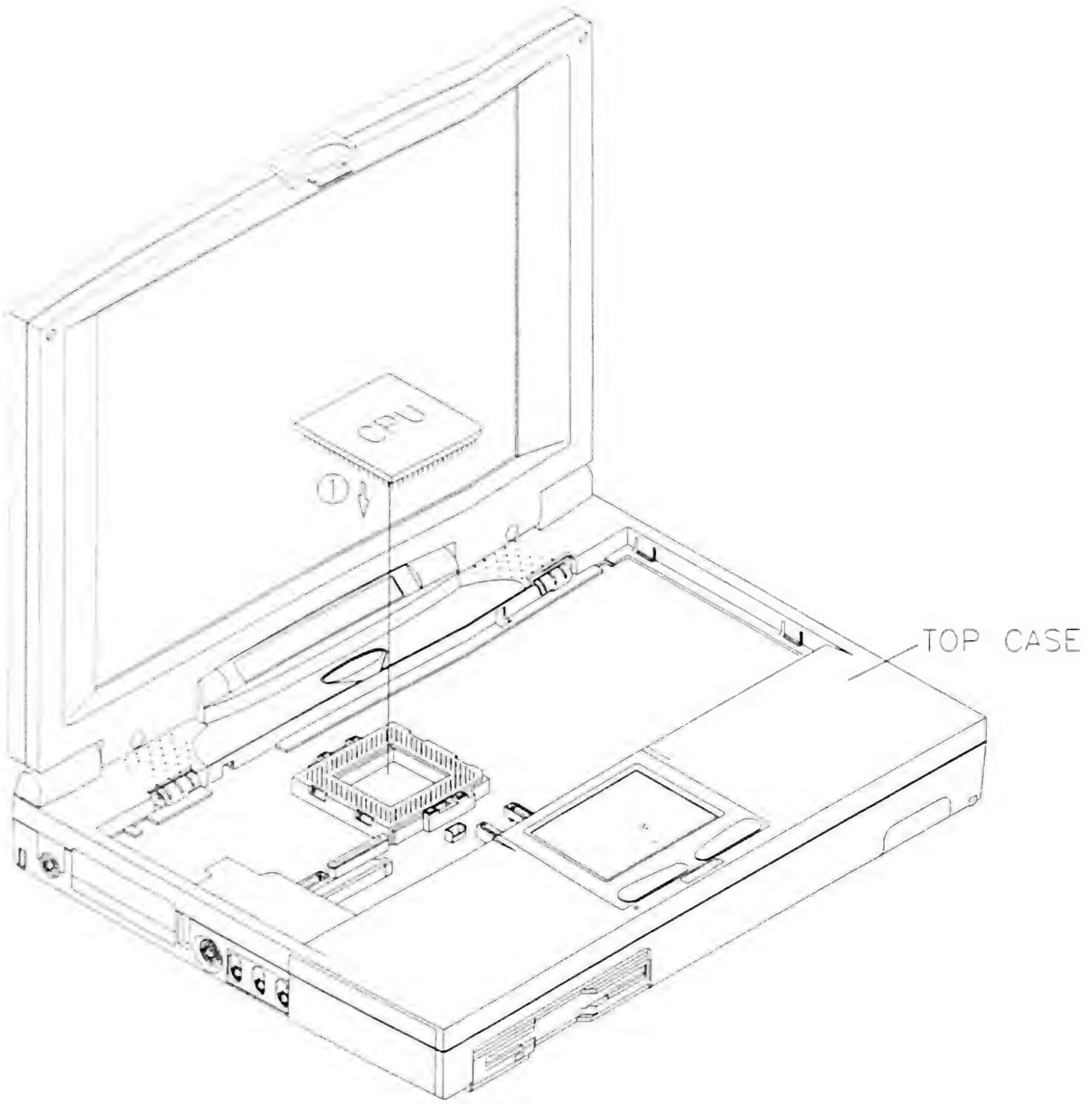
CPU
①
TOP CASE

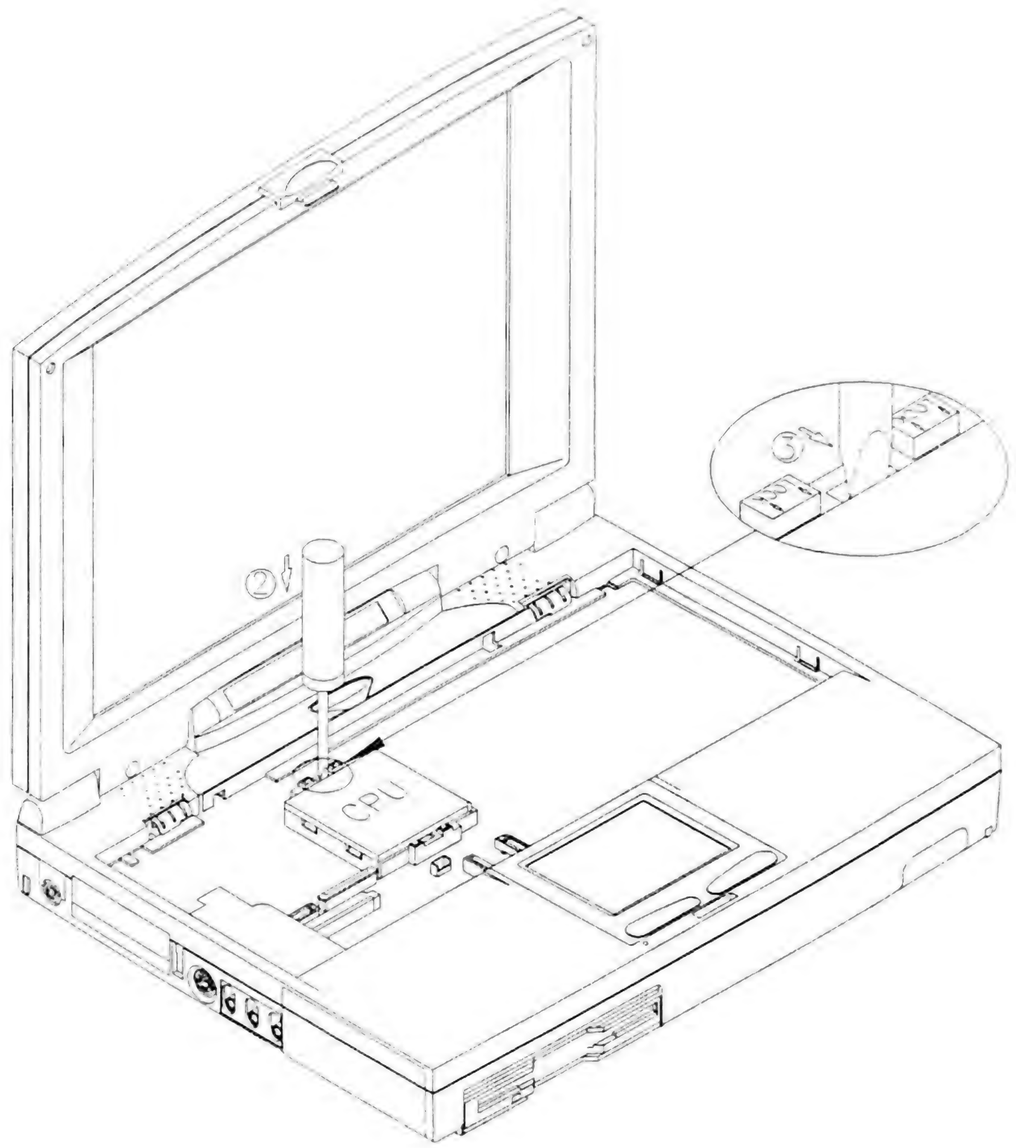
③
②
CPU

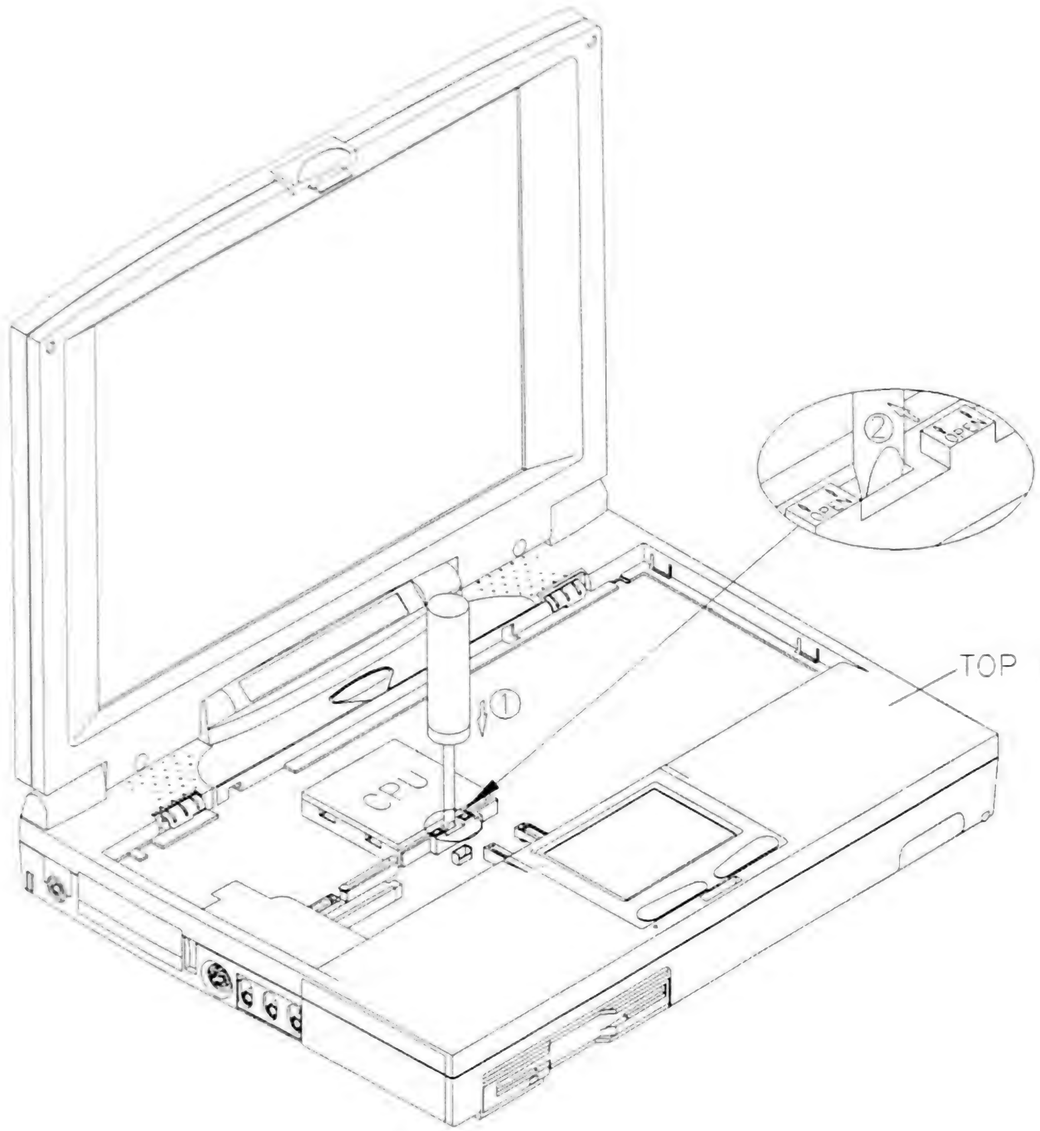


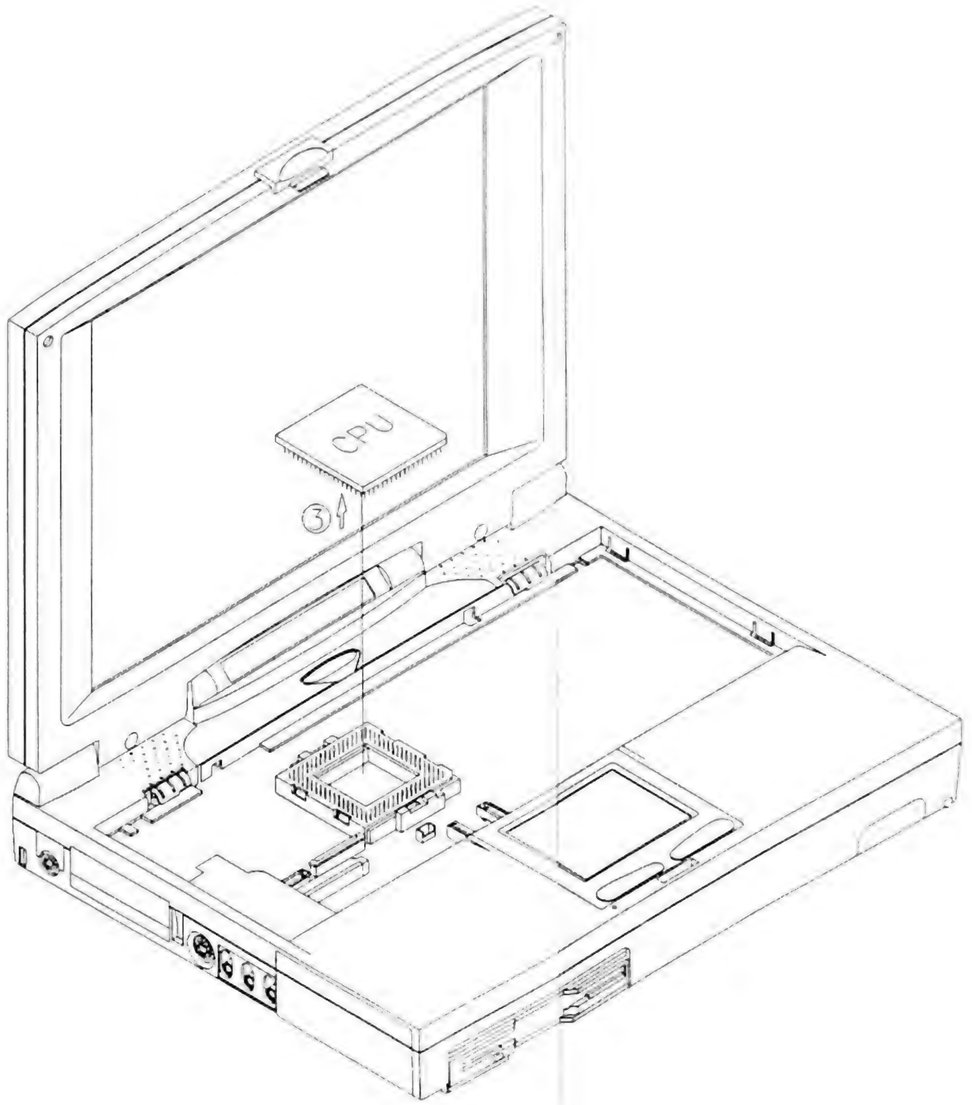


6

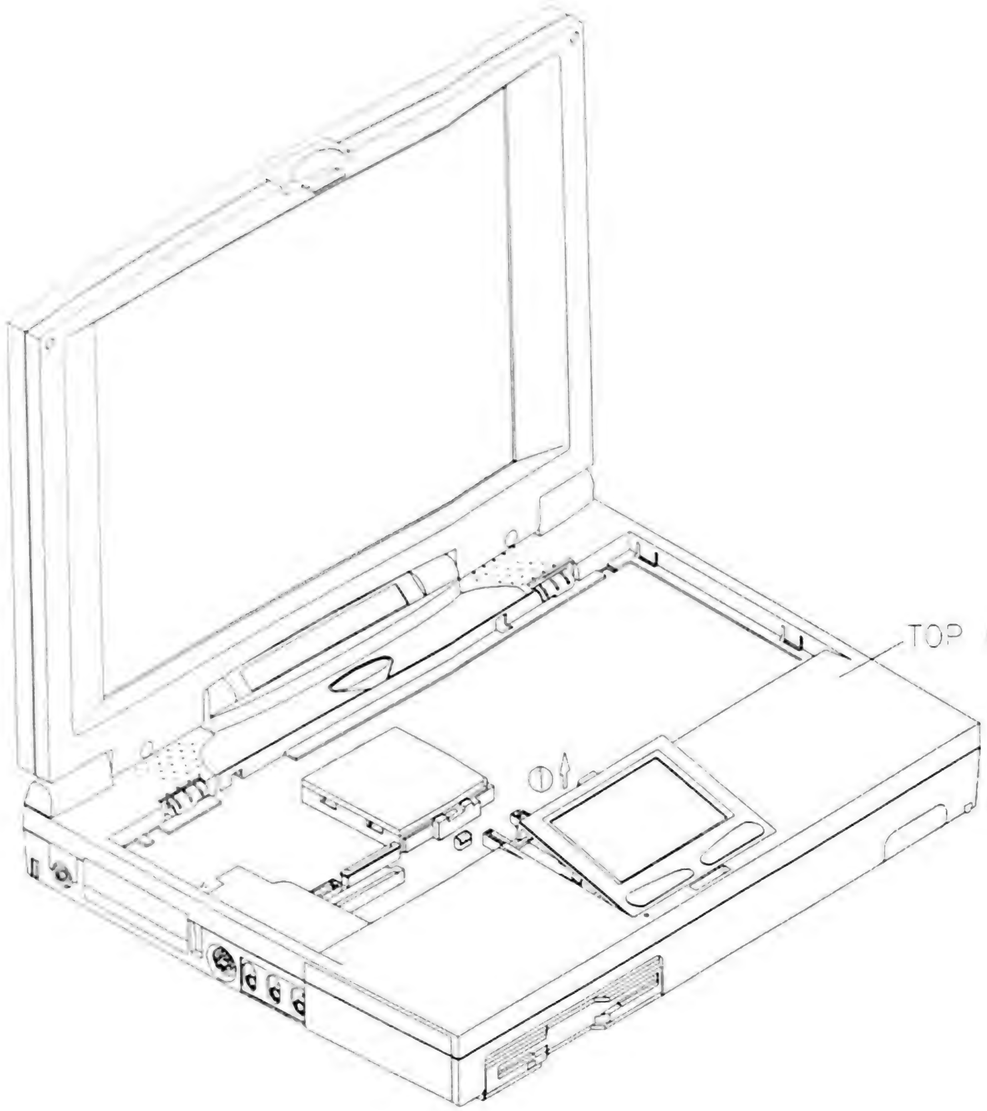


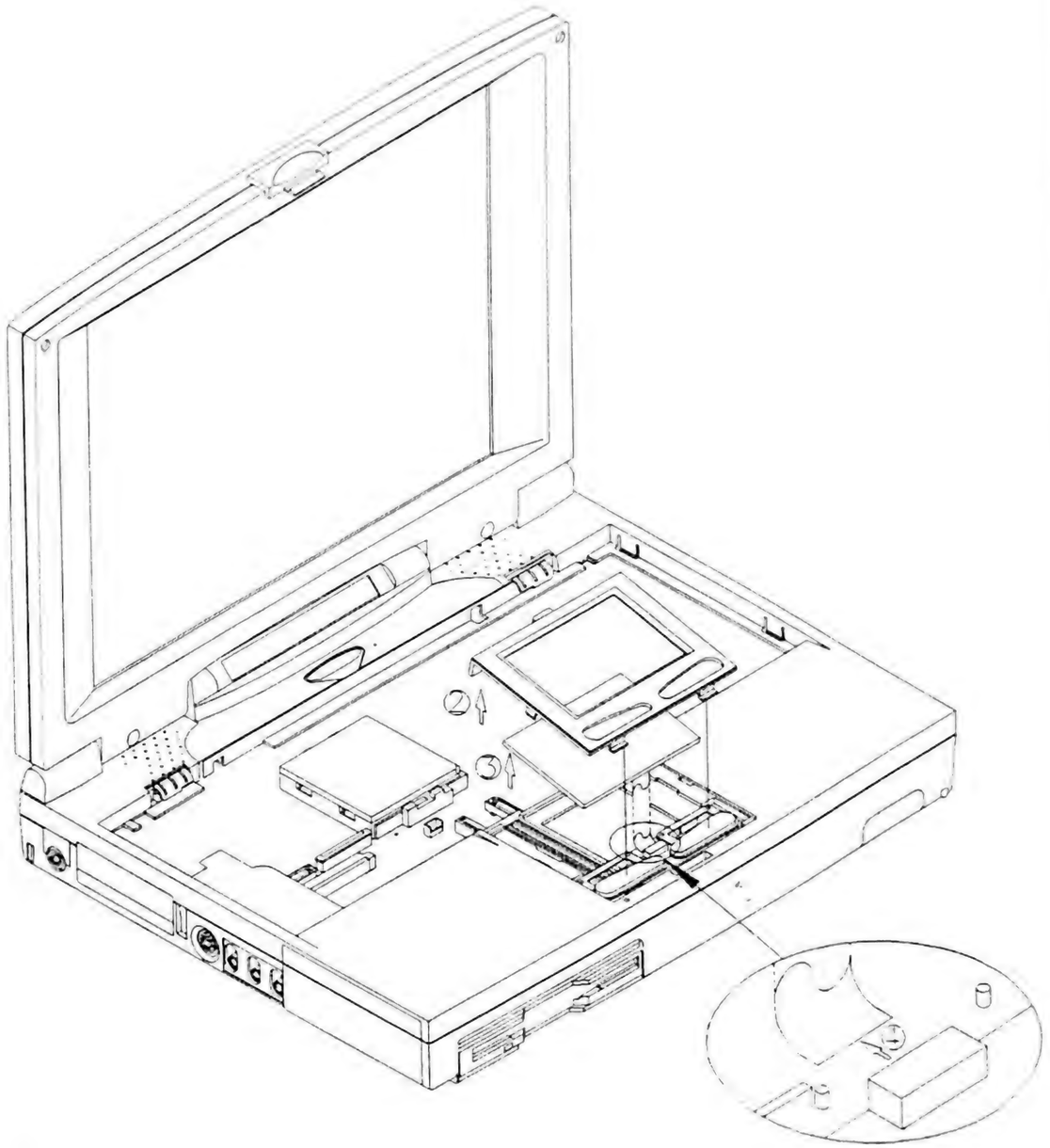


| NO | PART NAME | Q'TY |
|---|---|---|
| 1 | TOUCH PAD COVER | 1 |
| 2 | TOUCH PAD COVER | 1 |
| 3 | TOUCH PAD | 1 |
| 4 | TOUCH PAD FFC | 1 |

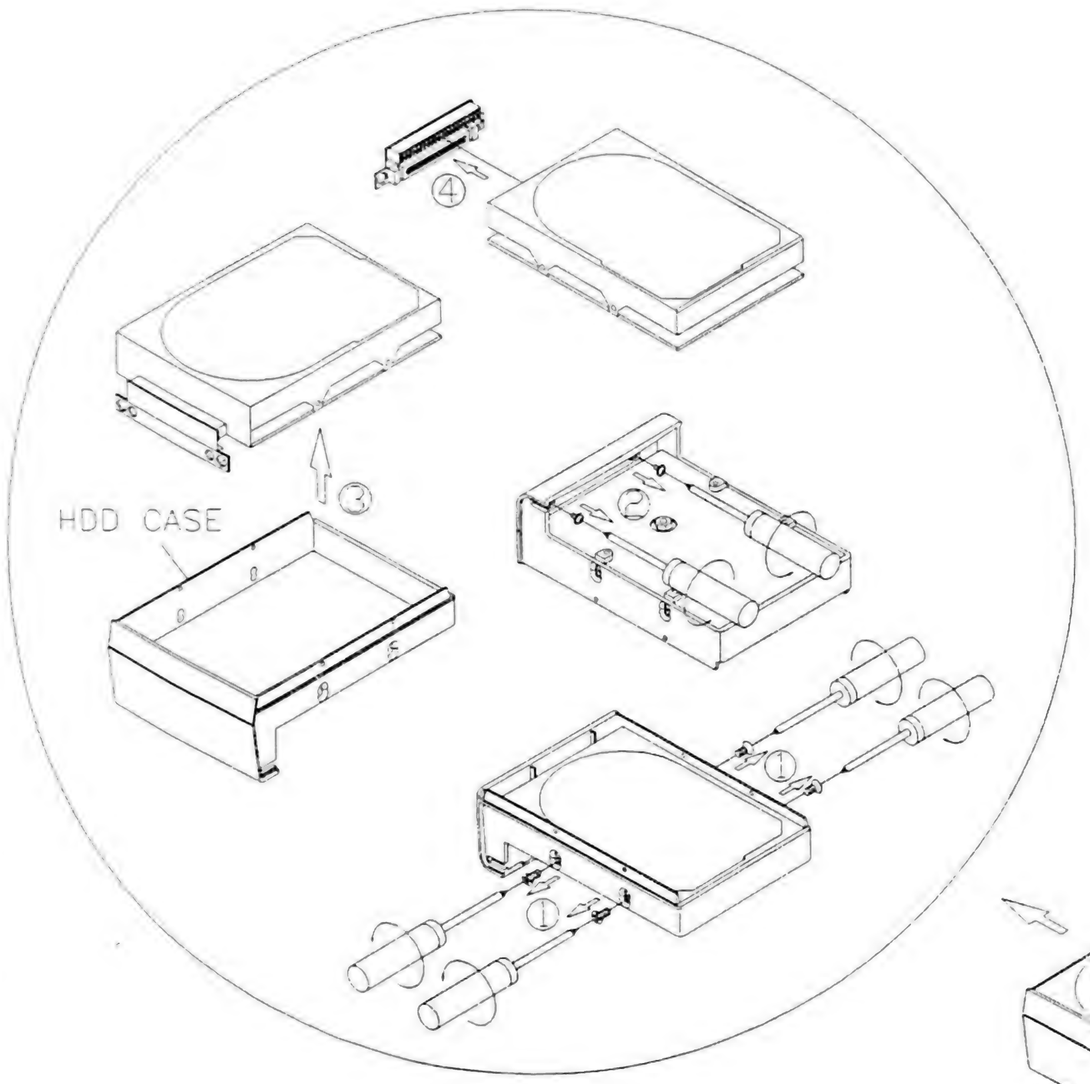

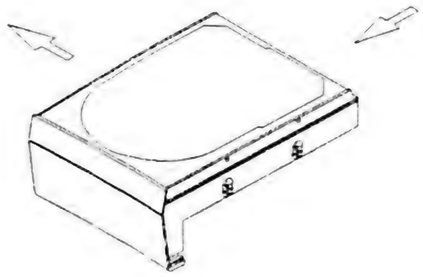

| NO | PART NAME | Q'TY |
|---|---|---|
| 1 | SCREW F-M3*0.5*4-BLACK | 1 |
| 2 | SCREW W-M2*0.4*3-N | 2 |
| 3 | HDD | 1 |
| 4 | HDD FPC | 1 |

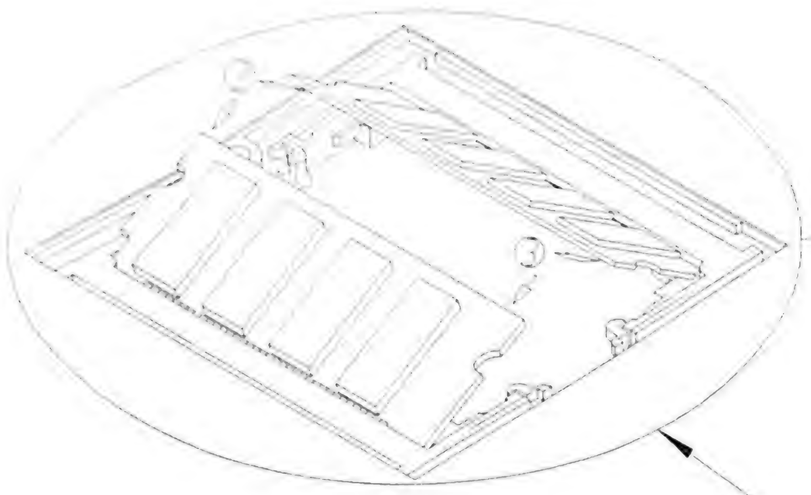

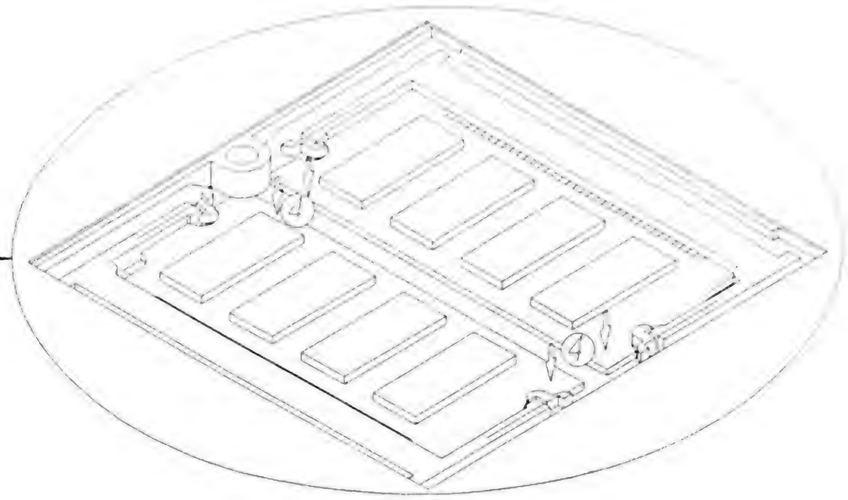

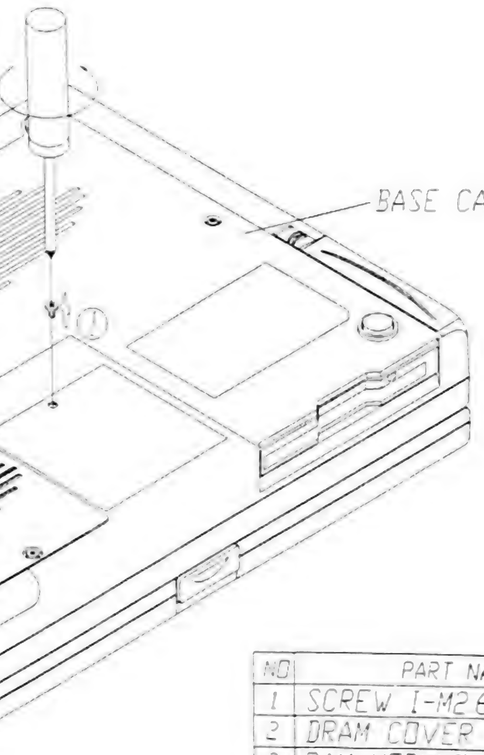


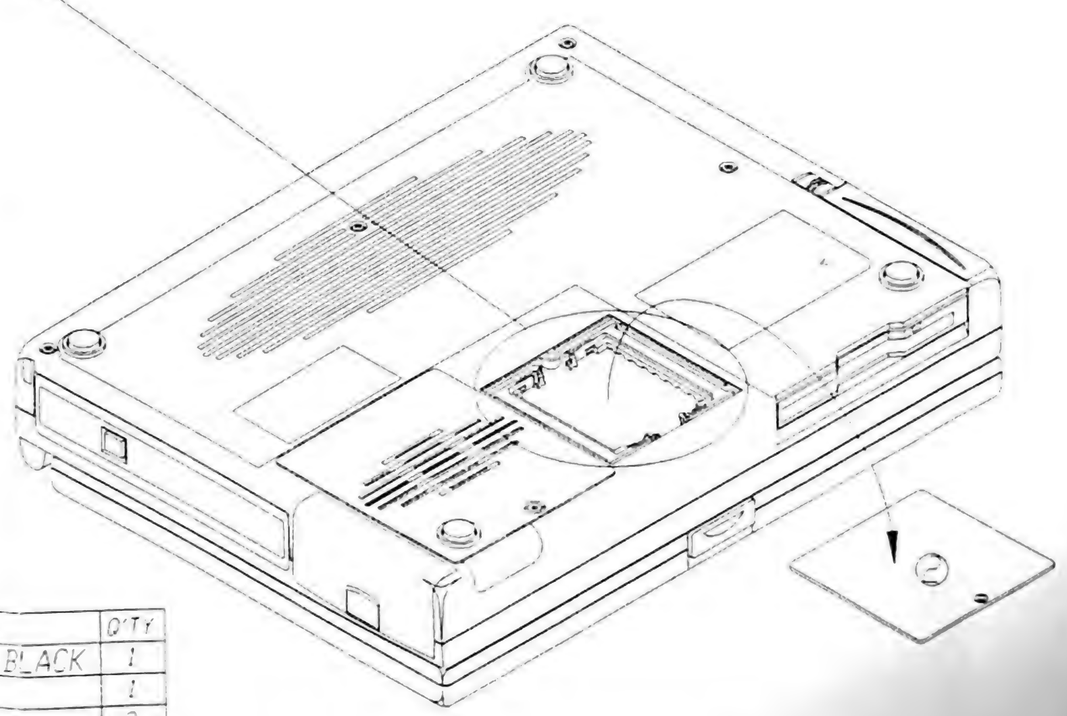

| NO | PART NAME | Q'TY |
|---|---|---|
| 1 | SCREW I-M2.6*0.45*4-BLACK | 1 |
| 2 | DRAM COVER | 1 |
| 3 | RAM MODULE CARD | 2 |
| 4 | RAM MODULE CARD | 2 |

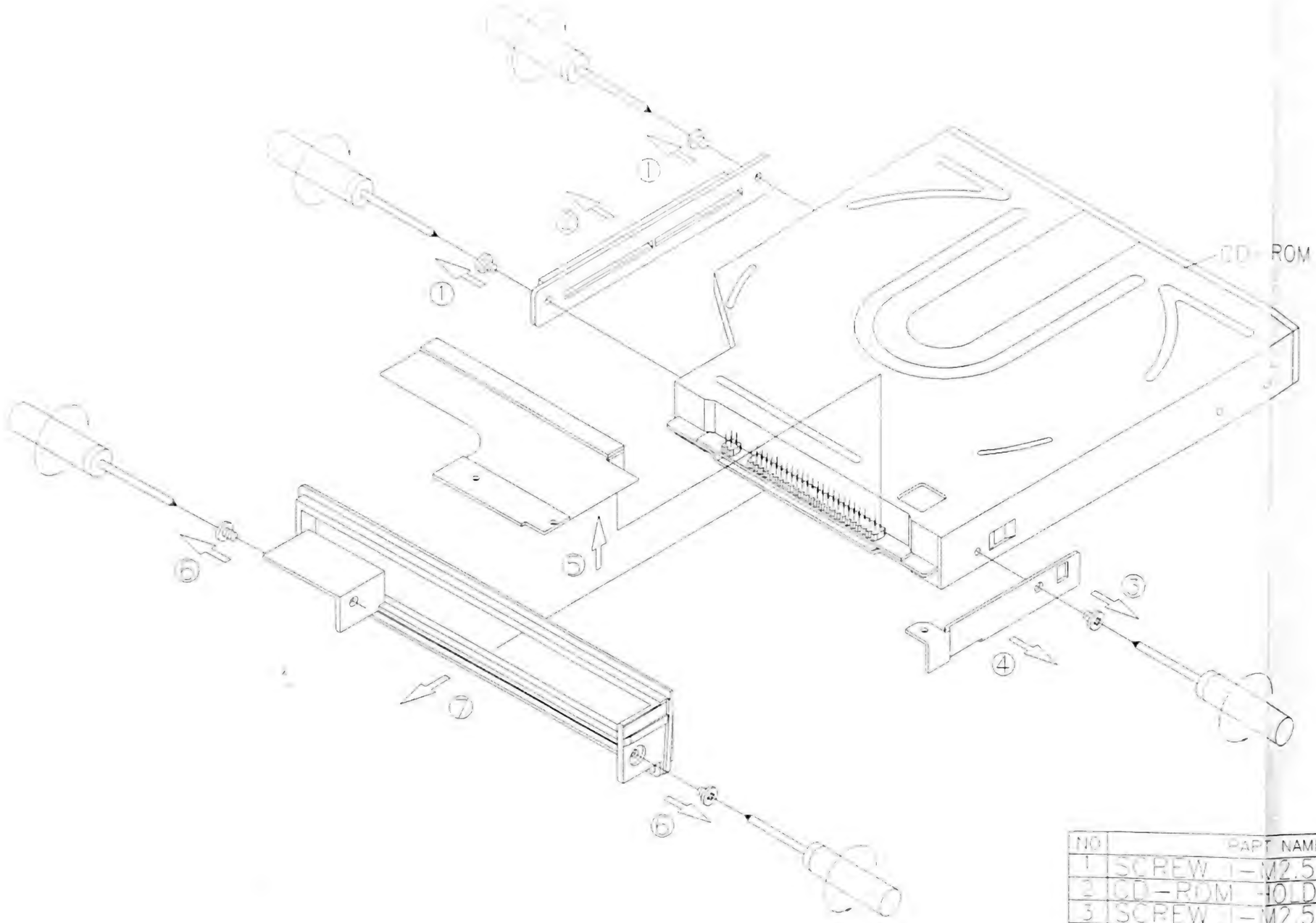


| NO | PART NAME | Q'TY |
|---|---|---|
| 1 | SCREW 1-M2.5*0.45*3-NI | 2 |
| 2 | CD-ROM HOLDER | 1 |
| 3 | SCREW 1-M2.5*0.45*3-NI | 1 |
| 4 | CD-ROM BRACKET | 1 |
| 5 | CD-ROM PC | 1 |
| 6 | SCREW 1-M2.5*0.45*3-NI | 2 |
| 7 | CD-ROM PANEL | 1 |

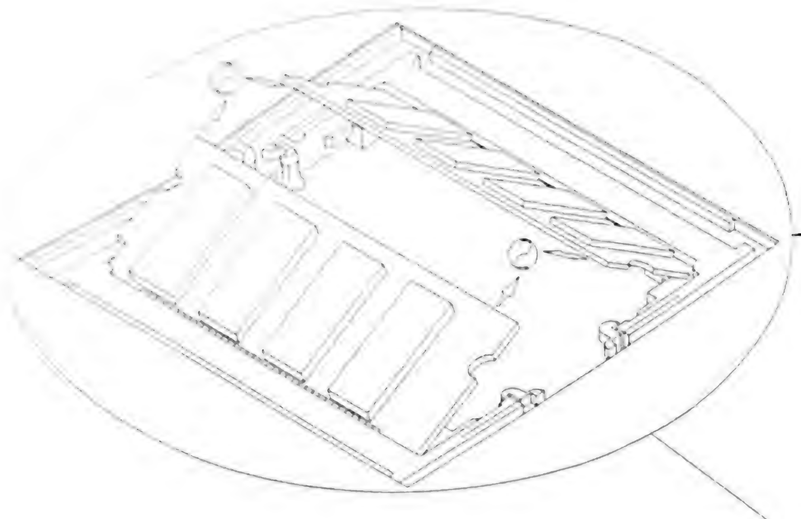

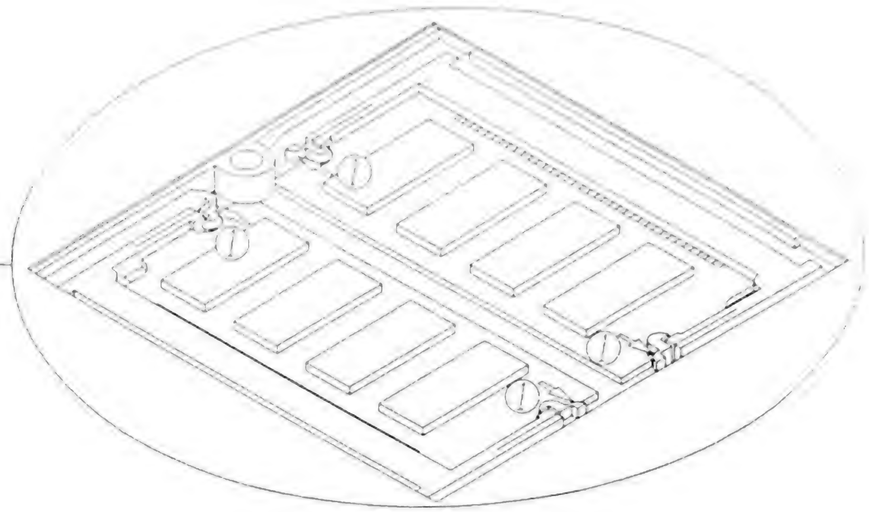

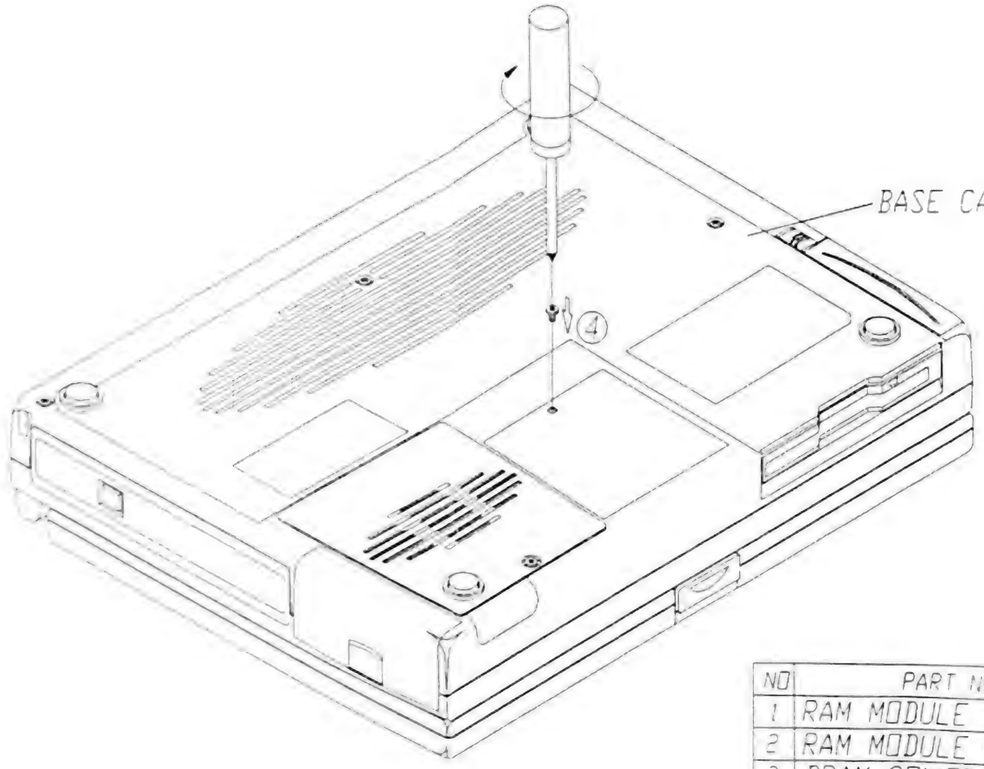


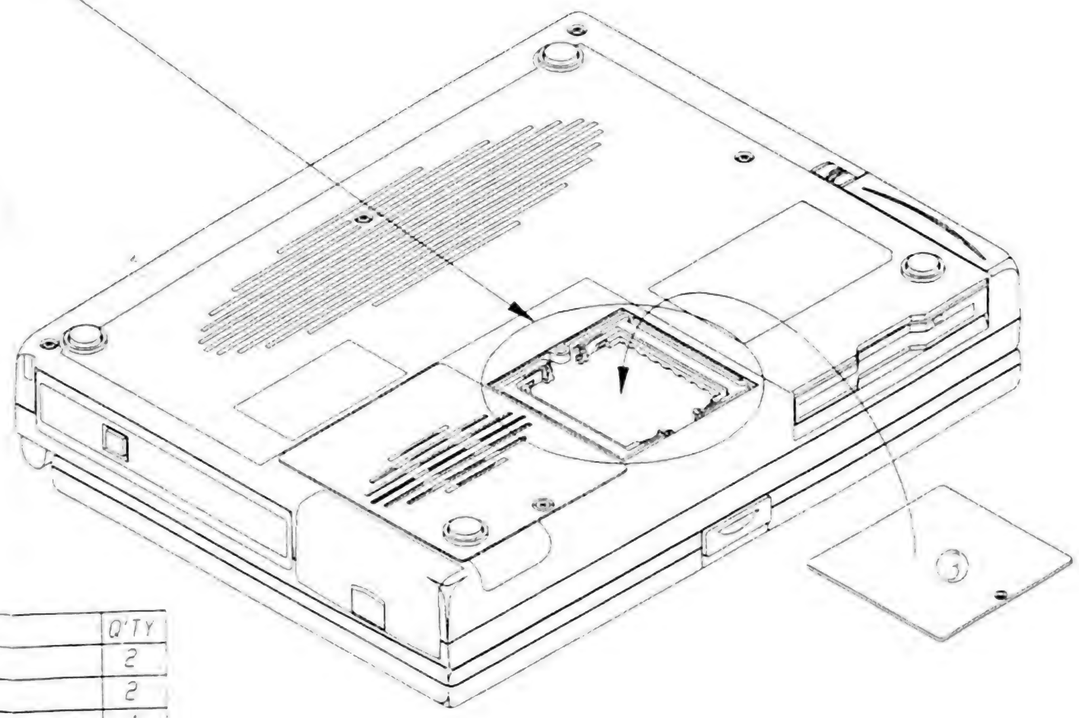


| NO | PART NAME | Q'TY |
|---|---|---|
| 1 | RAM MODULE CARD | 2 |
| 2 | RAM MODULE CARD | 2 |
| 3 | DRAM COVER | 1 |
| 4 | SCREW I-M2.6*0.45*4-BLACK | 1 |

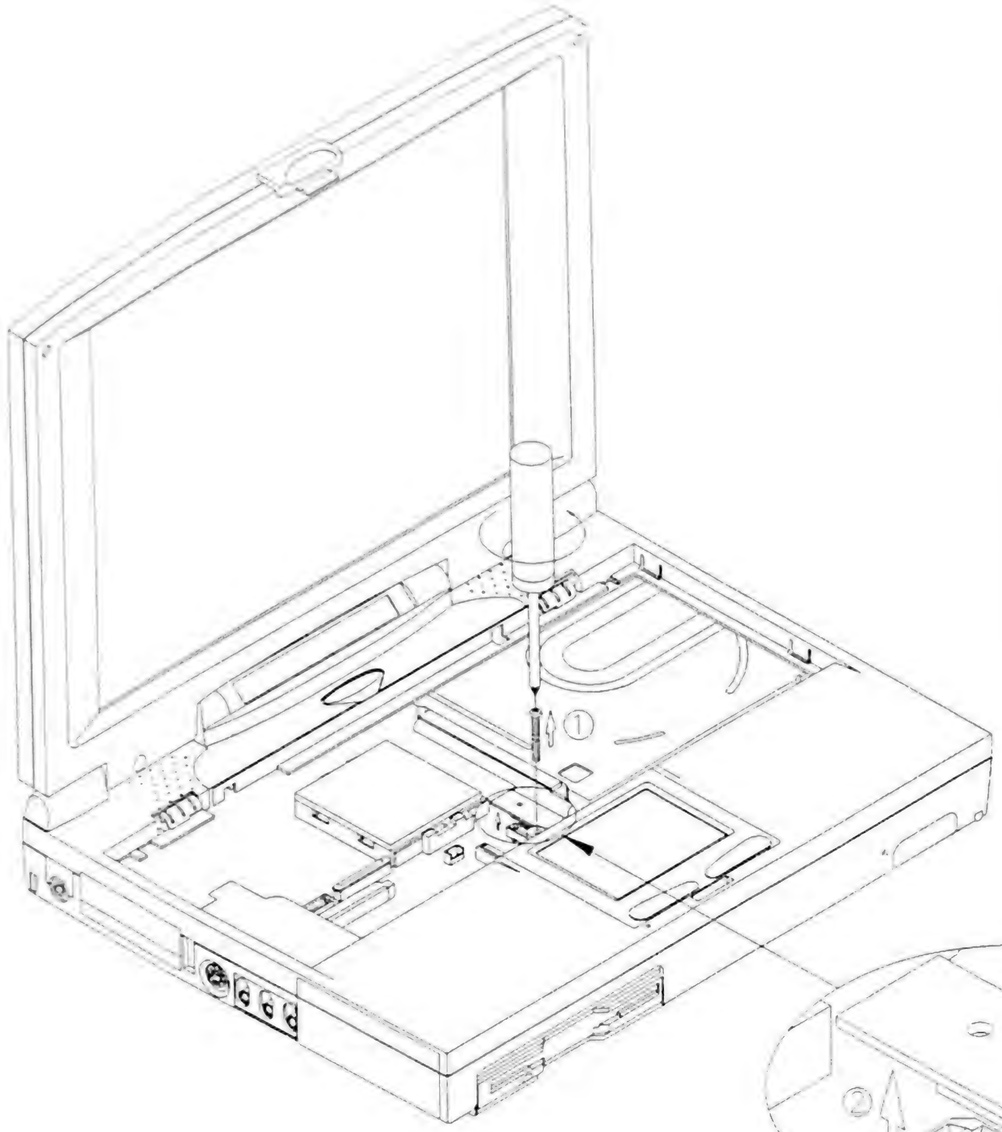


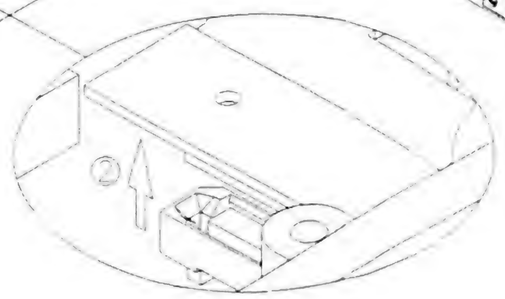


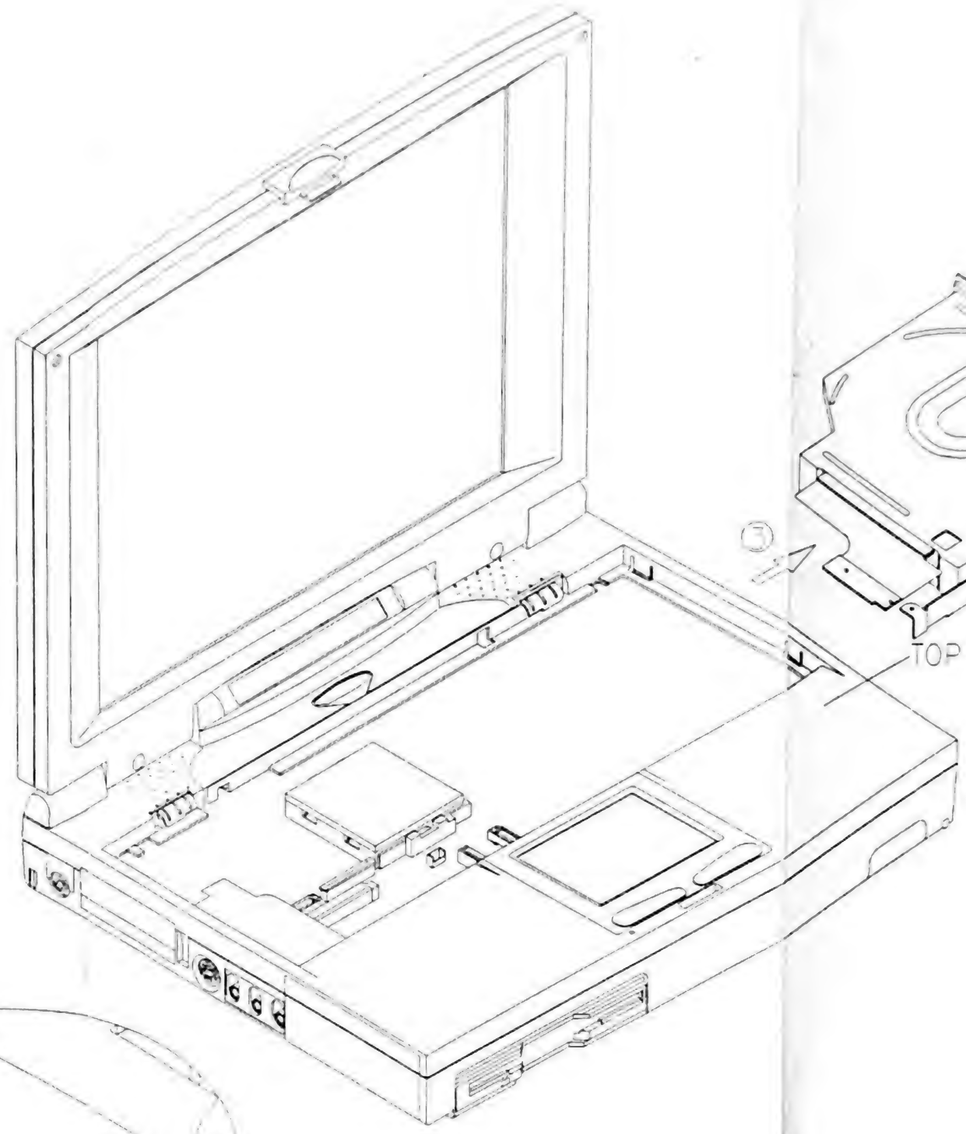

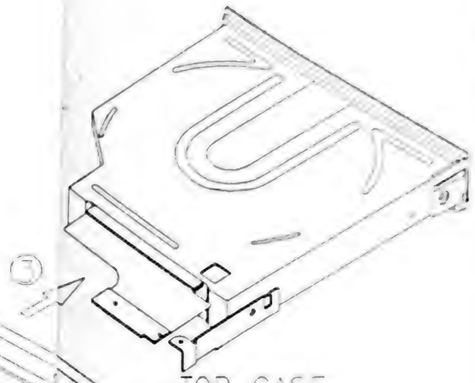


| NO | PART NAME | Q'TY |
|---|---|---|
| 1 | SCREW B-M2.6*0.45*22-BLACK | 1 |
| 2 | CD-ROM CONNECTOR | 1 |
| 3 | CD-ROM MODULE | 1 |

16

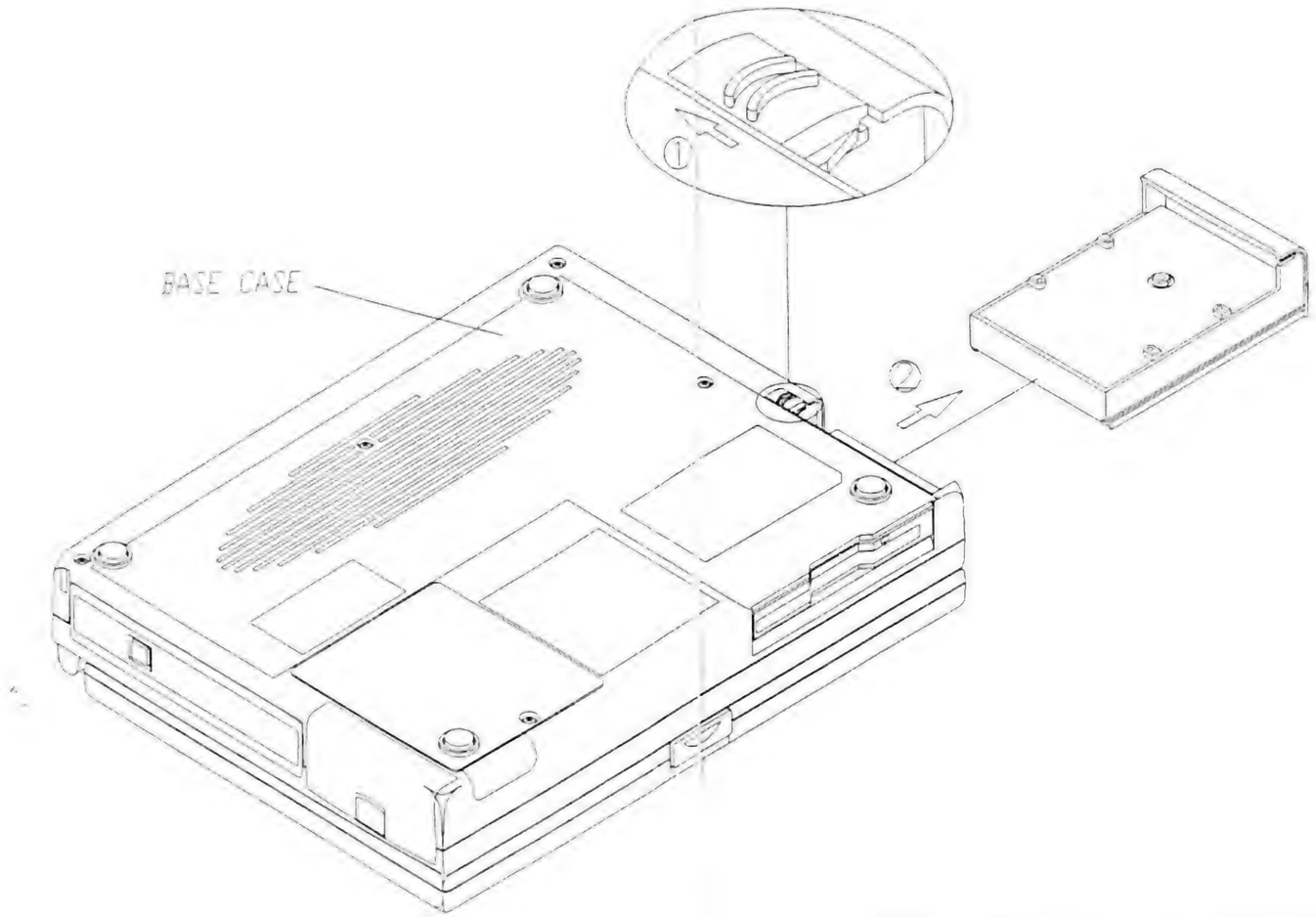


| NO | PART NAME | Q'TY |
|---|---|---|
| 1 | HDD HOOK | 1 |
| 2 | HDD MODULE | 1 |

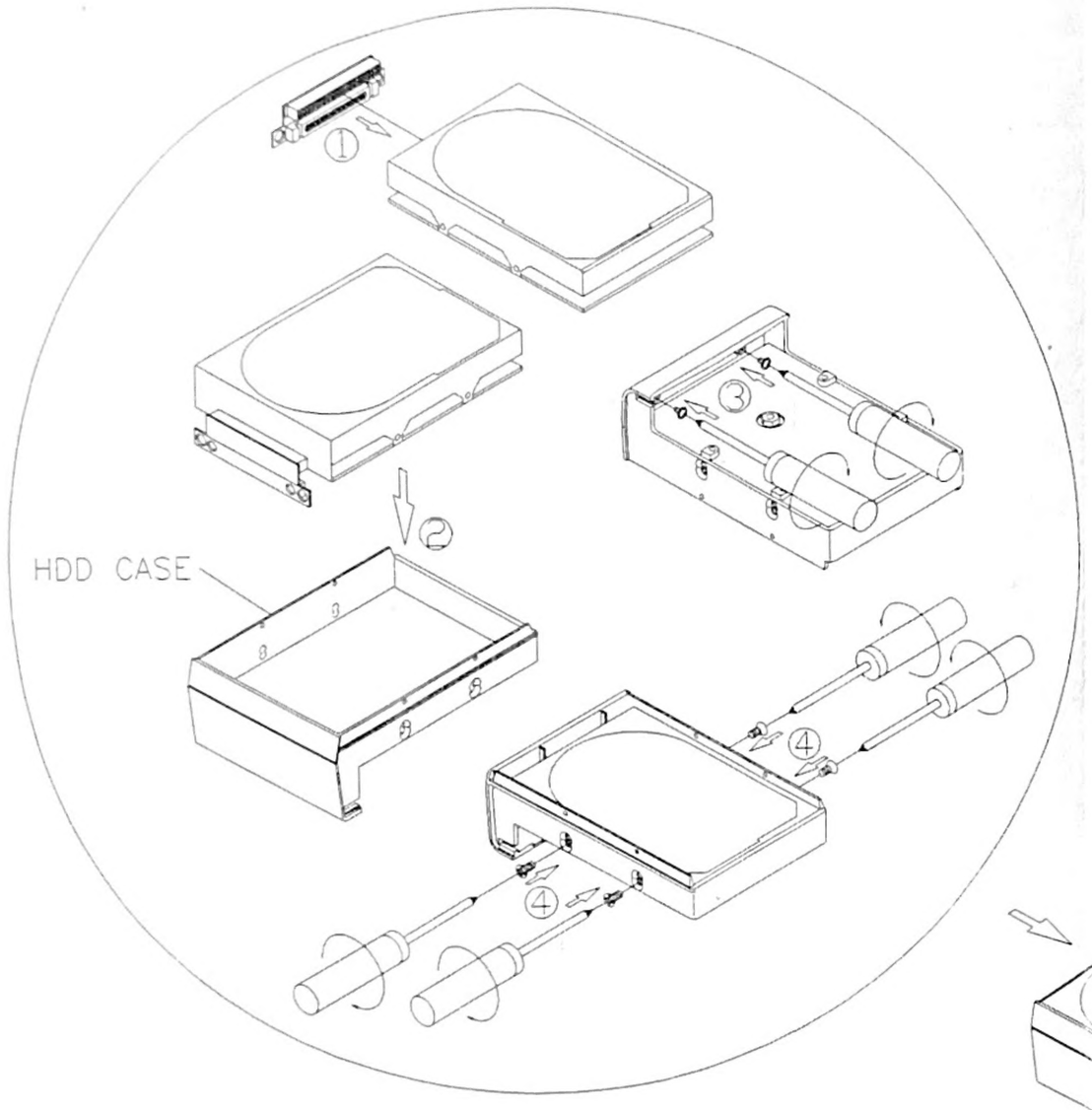


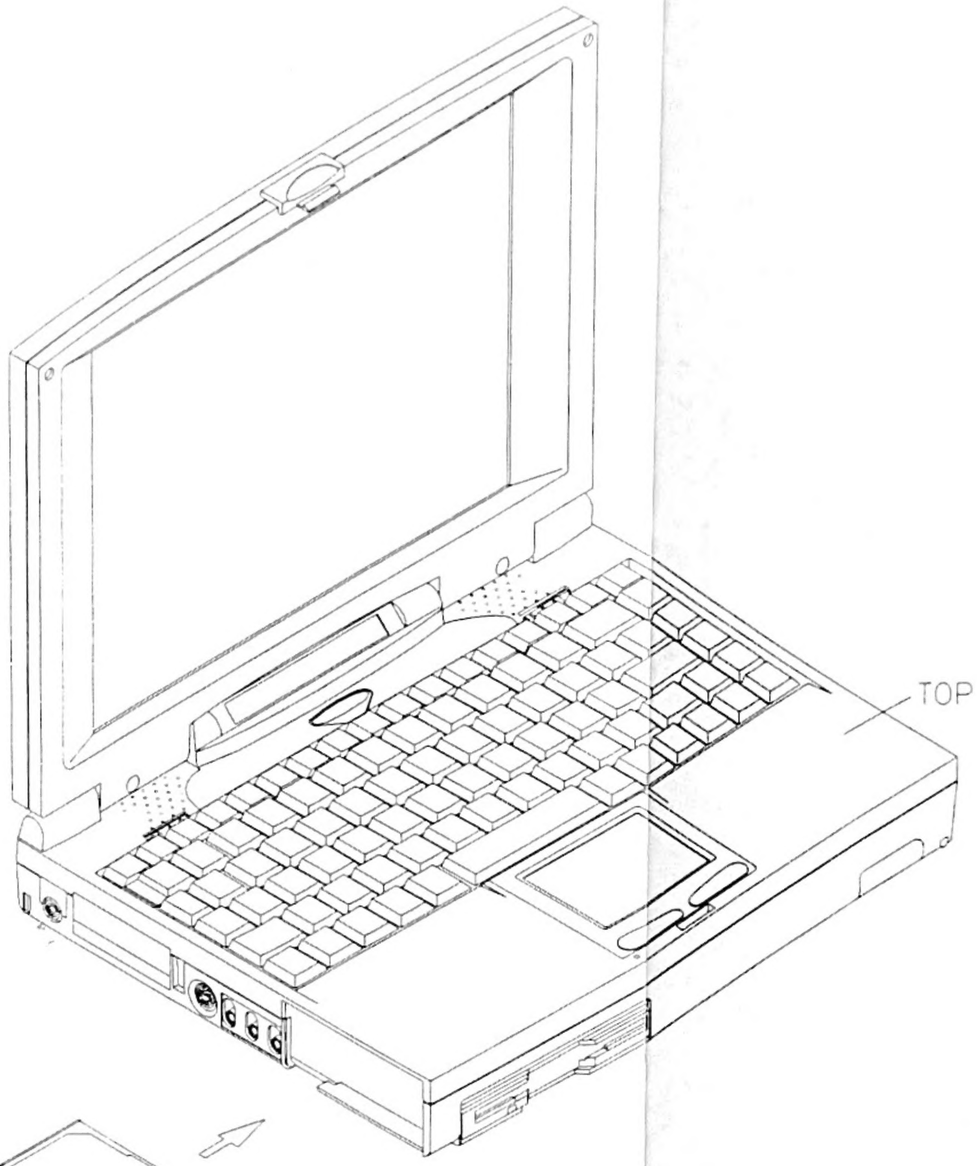


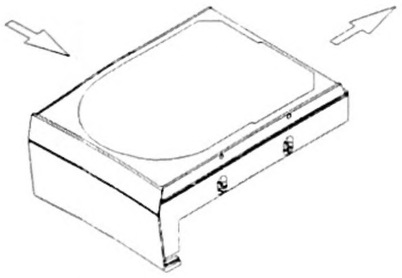

| NO | PART NAME | Q'TY |
|---|---|---|
| 1 | HDD FPC | 1 |
| 2 | HDD | 1 |
| 3 | SCREW W-M2*0.4*3-Ni | 2 |
| 4 | SCREW F-M3*0.5*4-BLACK | 4 |

| NO | PART NAME | Q'TY |
|---|---|---|
| 5 | CPU DISSIPATE PLATE | 1 |
| 6 | KEYBOARD CONNECTOR | 1 |
| 7 | KEYBOARD | 1 |
| 8 | HINGE COVER | 2 |
| 9 | LCM COVER | 1 |
| 10 | LCM CONNECTOR | 1 |
| 11 | LCM COVER | 1 |
| 12 | SCREW I-M2.6*0.45*4-BLACK | 2 |
| 13 | LCD CABLE | 1 |
| 14 | INVERTER CABLE | 1 |
| 15 | SCREW I-M2.6*0.45*6-BLACK | 2 |
| 16 | LCD MODULE | 1 |

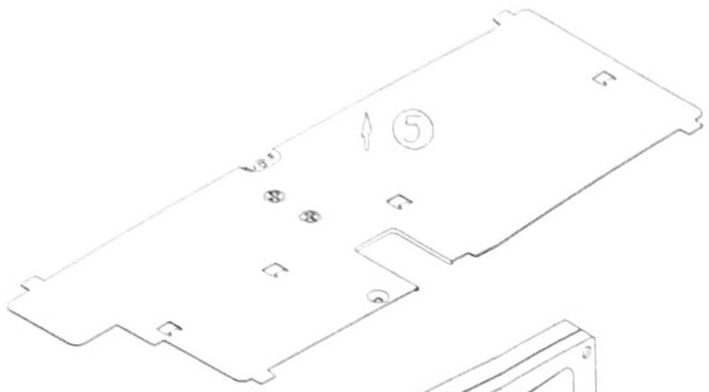


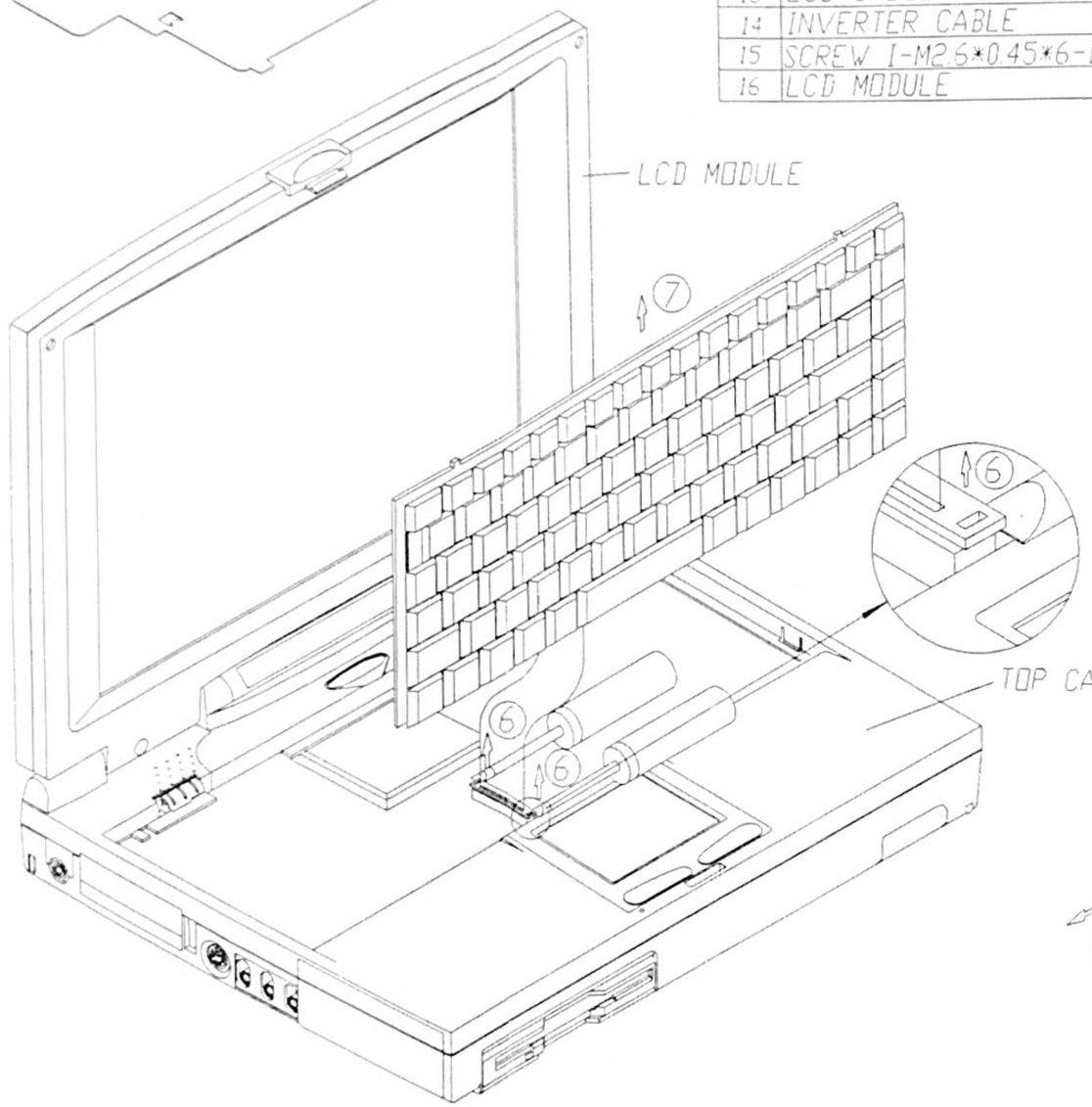


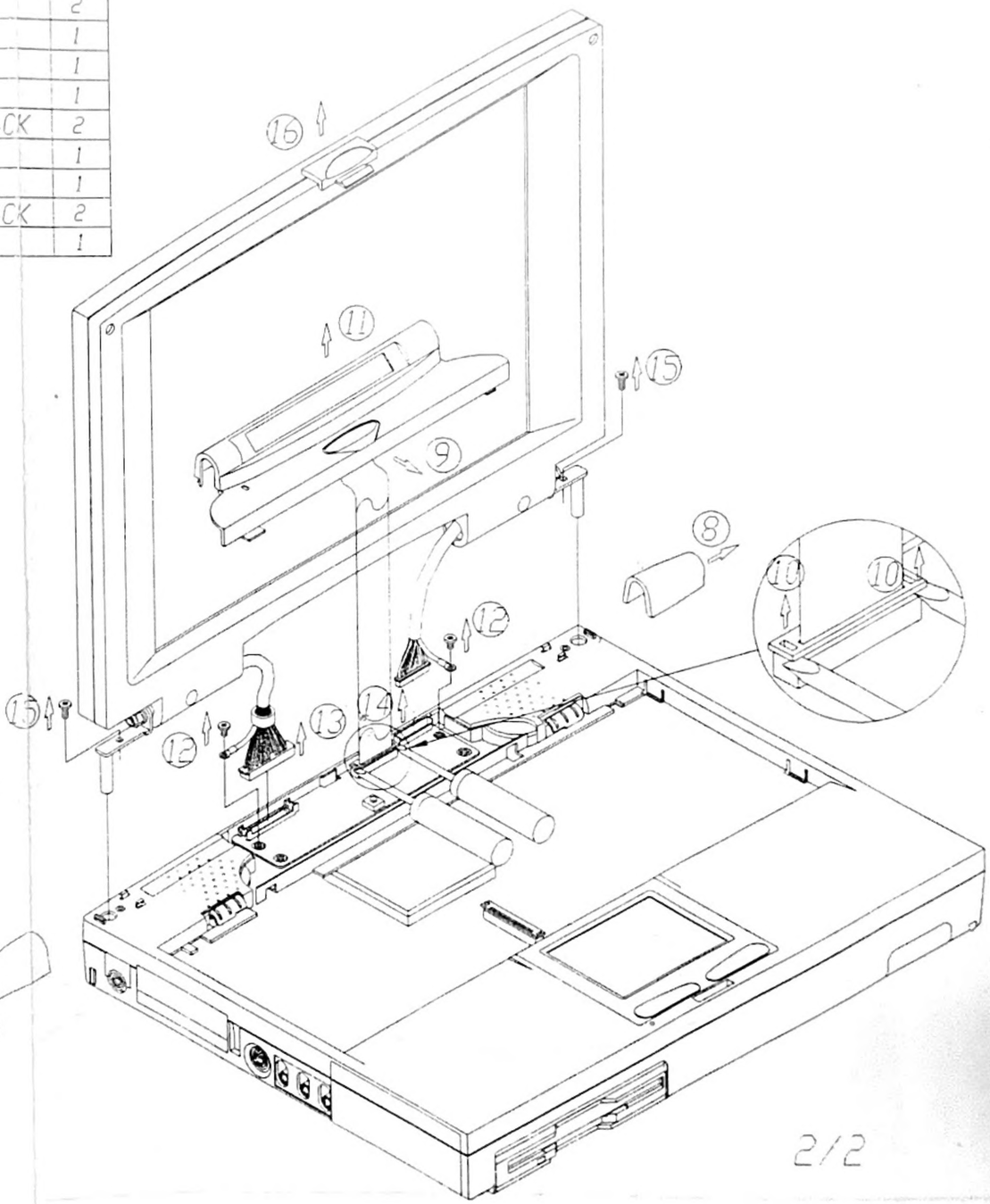


2/2

17