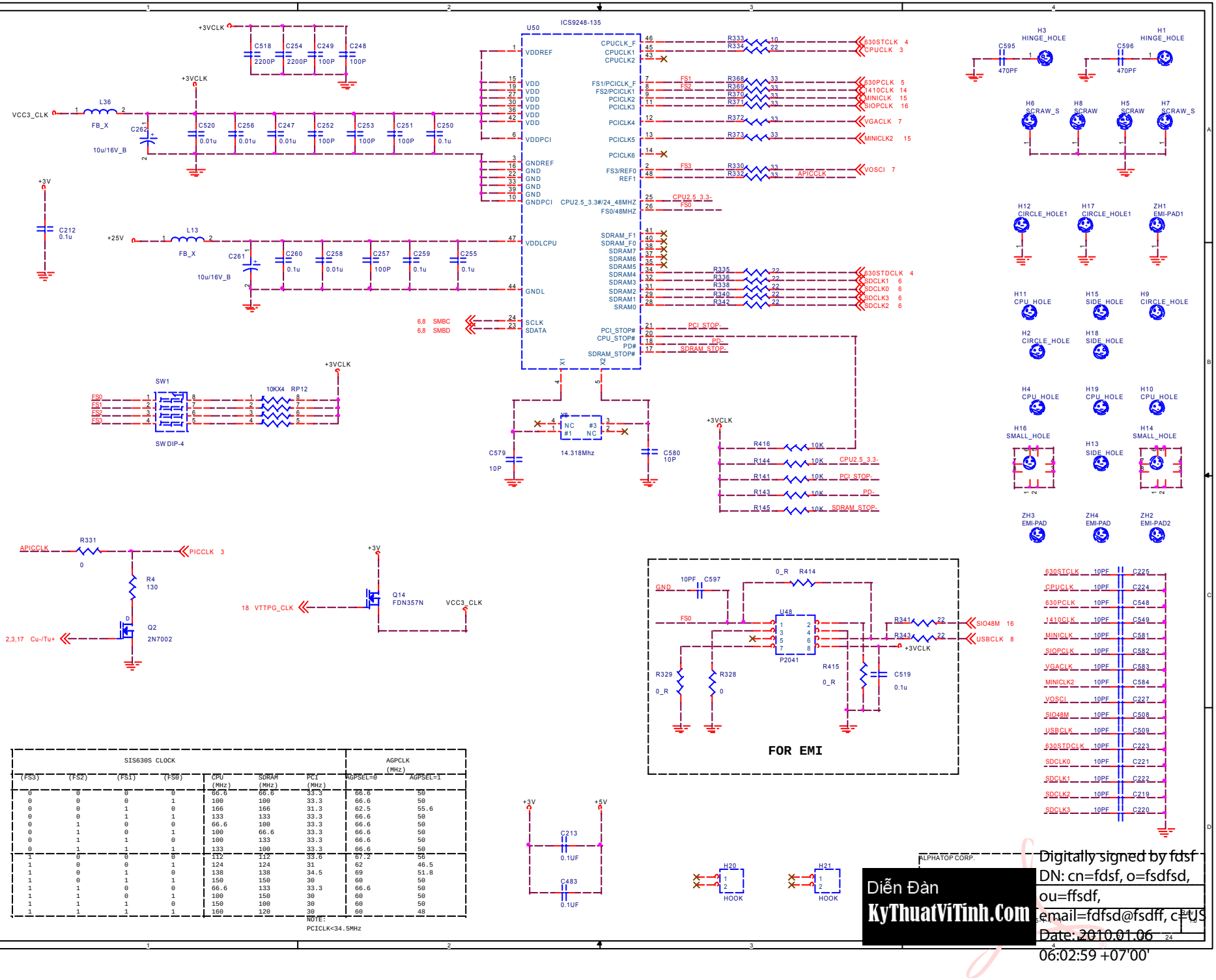
ICS9248-135
U50
+3VCLK
VCC3_CLK
FB_X
10u/16V_B
+3V
+25V
SW1
SW DIP-4
10KX4 RP12
14.318Mhz
APICCLK
PICCLK 3
Q2
2N7002
Q14
FDN357N
VTTPG_CLK
SIS630S CLOCK
AGPCLK (MHz)
NOTE:
PCICLK<34.5MHz
FOR EMI
P2041
U48
HINGE_HOLE
SCRAW_S
SCRAW
CIRCLE_HOLE1
EMI-PAD1
CPU_HOLE
SIDE_HOLE
SMALL_HOLE
EMI-PAD
EMI-PAD2
HOOK
ALPHATOP CORP.
Diễn Đàn
KyThuatViTinh.Com
Digitally signed by fdsf
DN: cn=fdsf, o=fsdfsd, ou=ffsdf, email=fdfsd@fsdff, c=US
Date: 2010.01.06 06:02:59 +07'00'

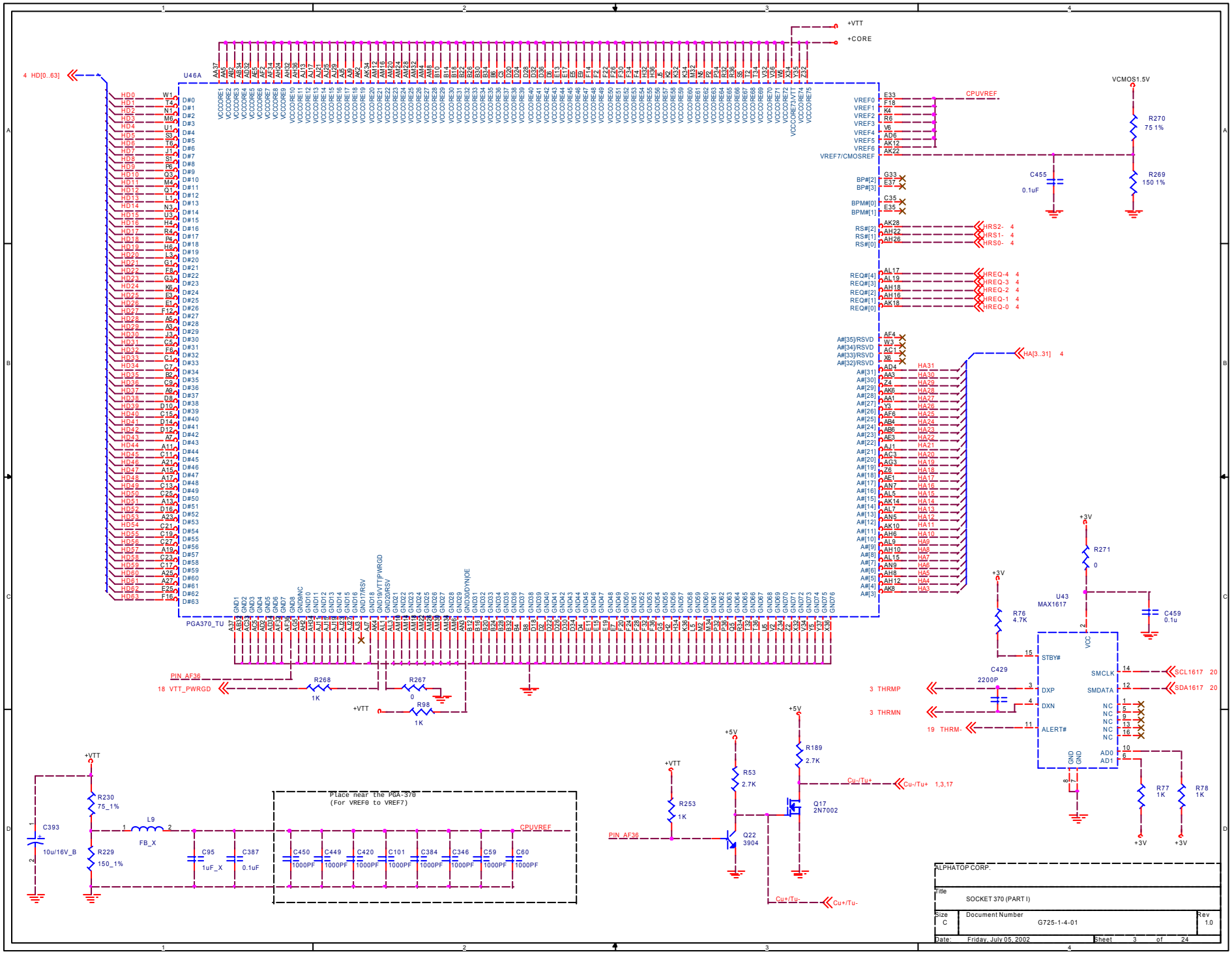

ALPHATOP CORP.		
Title: SOCKET 370 (PART I)		
Size: C	Document Number: G725-1-4-01	Rev: 1.0
Date: Friday, July 05, 2002	Sheet 3 of 24	

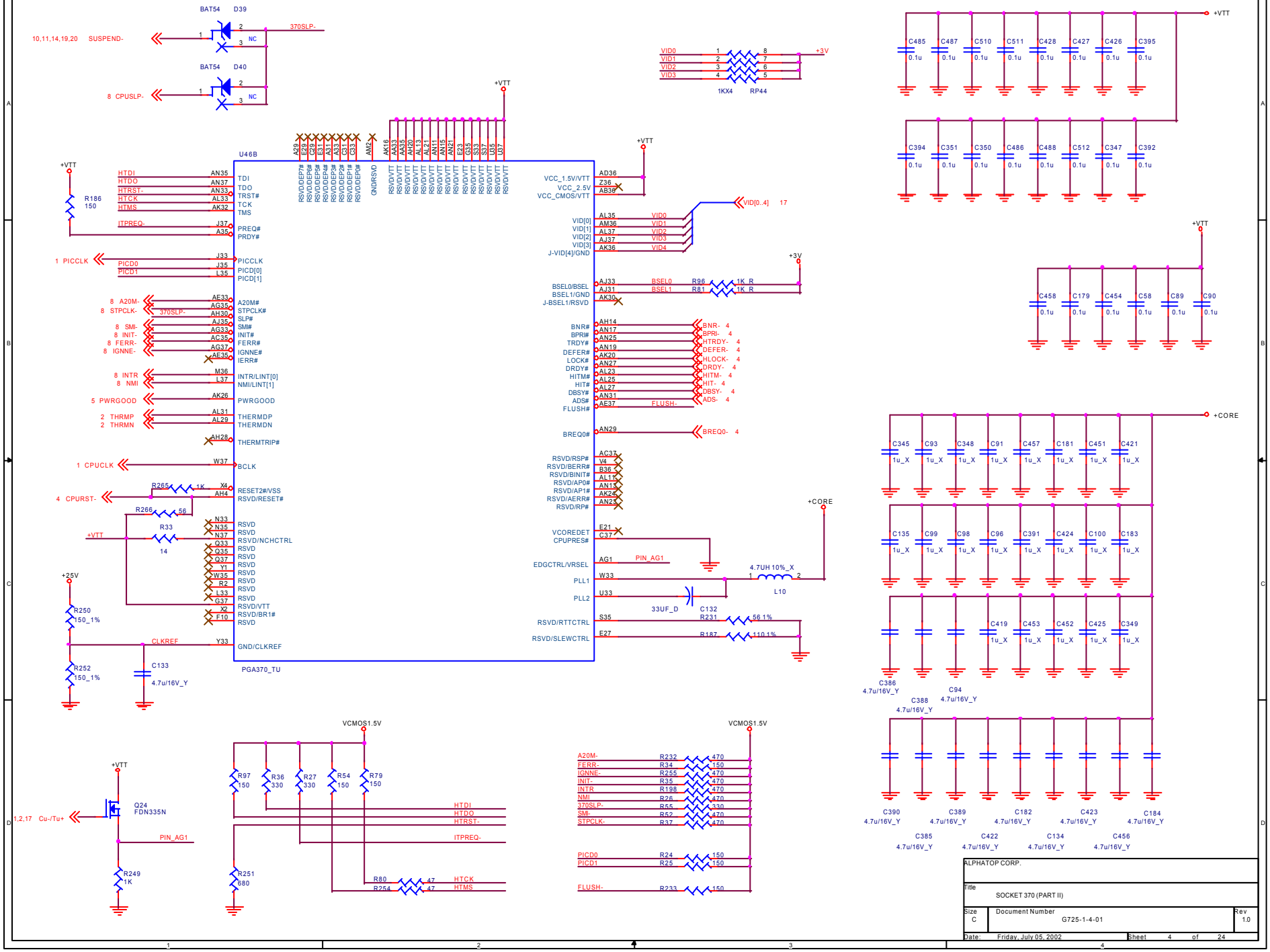
BAT54 D39
10,11,14,19,20 SUSPEND-
370SLP-
BAT54 D40
8 CPUSLP-
U46B
PGA370_TU
HTDI
HTDO
HTRST-
HTCK
HTMS
ITPREQ-
1 PICCLK
PICD0
PICD1
8 A20M-
8 STPCLK-
8 SMI-
8 INIT-
8 FERR-
8 IGNNE-
8 INTR
8 NMI
5 PWRGOOD
2 THRMP
2 THRMN
1 CPUCLK
4 CPURST-
R265 1K
R266 56
R33 14
R186 150
R250 150_1%
R252 150_1%
C133 4.7u/16V_Y
CLKREF
+25V
+VTT
+3V
+CORE
VID0
VID1
VID2
VID3
1KX4 RP44
R96 1K_R
R81 1K_R
BSEL0
BSEL1
BREQ0-
FLUSH-
PIN_AG1
4.7UH 10%_X
L10
33UF_D
C132
R231 56.1%
R187 110.1%
C485 C487 C510 C511 C428 C427 C426 C395
C394 C351 C350 C486 C488 C512 C347 C392
C458 C179 C454 C58 C89 C90
C345 C93 C348 C91 C457 C181 C451 C421
C135 C99 C98 C96 C391 C424 C100 C183
C419 C453 C452 C425 C349
C386 C388 C94
C390 C389 C182 C423 C184
C385 C422 C134 C456
VCMOS1.5V
Q24 FDN335N
1,2,17 Cu-/Tu+
R249 1K
R97 150
R36 330
R27 330
R54 150
R79 150
R251 680
R80 47
R254 47
A20M-
FERR-
IGNNE-
INIT-
INTR
NMI
370SLP-
SMI-
STPCLK-
R232 470
R34 150
R255 470
R35 470
R198 470
R26 470
R55 330
R52 470
R37 470
PICD0
PICD1
FLUSH-
R24 150
R25 150
R233 150
ALPHATOP CORP.
Title
SOCKET 370 (PART II)
Size C
Document Number G725-1-4-01
Rev 1.0
Date: Friday, July 05, 2002
Sheet 4 of 24

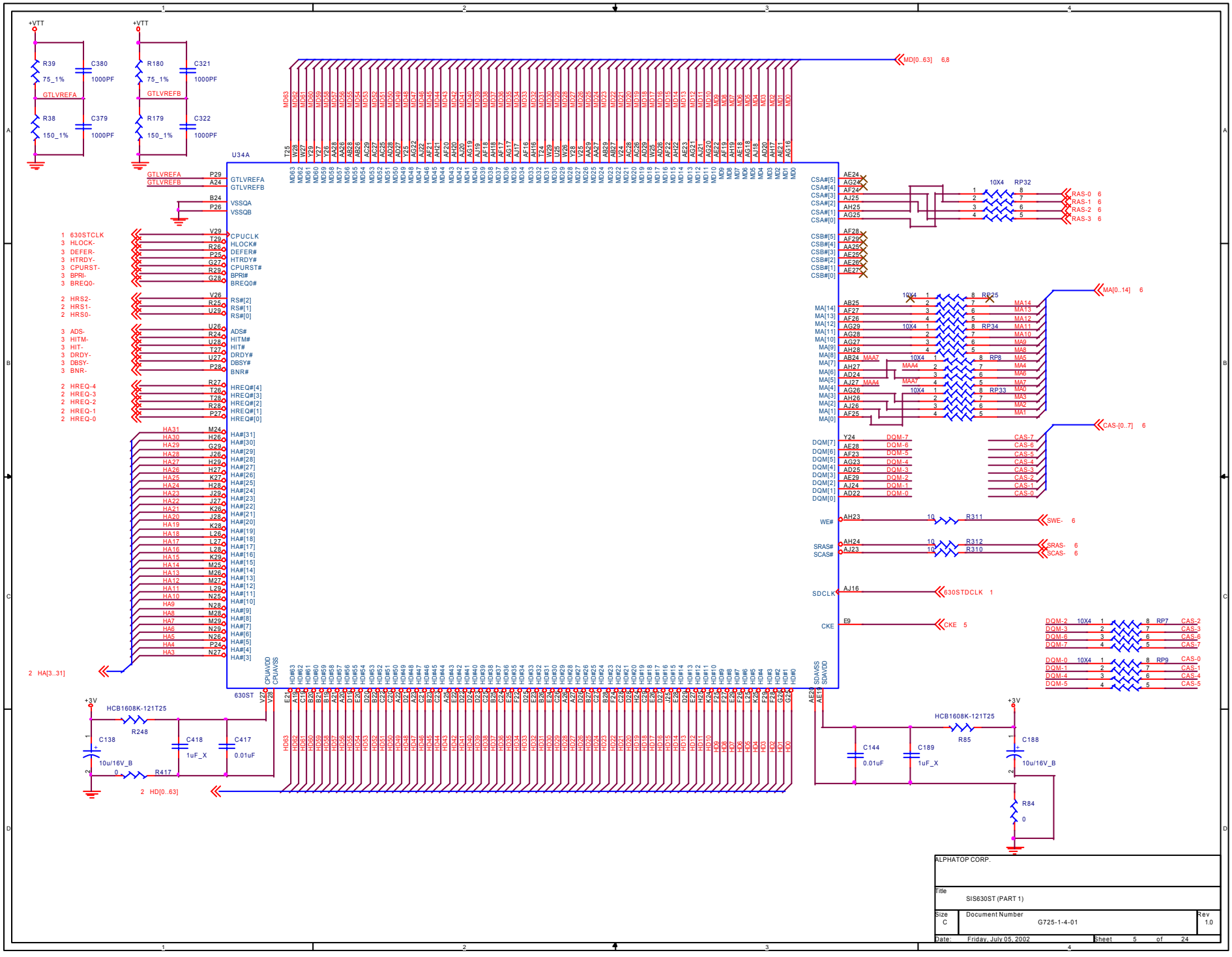
+VTT
R39
75_1%
C380
1000PF
GTLVREFA
R38
150_1%
C379
1000PF
+VTT
R180
75_1%
C321
1000PF
GTLVREFB
R179
150_1%
C322
1000PF
U34A
GTLVREFA
GTLVREFB
VSSQA
VSSQB
CPUCLK
HLOCK#
DEFER#
HTRDY#
CPURST#
BPRI#
BREQ0#
RS#[2]
RS#[1]
RS#[0]
ADS#
HITM#
HIT#
DRDY#
DBSY#
BNR#
HREQ#[4]
HREQ#[3]
HREQ#[2]
HREQ#[1]
HREQ#[0]
HA#[31]
HA#[30]
HA#[29]
HA#[28]
HA#[27]
HA#[26]
HA#[25]
HA#[24]
HA#[23]
HA#[22]
HA#[21]
HA#[20]
HA#[19]
HA#[18]
HA#[17]
HA#[16]
HA#[15]
HA#[14]
HA#[13]
HA#[12]
HA#[11]
HA#[10]
HA#[9]
HA#[8]
HA#[7]
HA#[6]
HA#[5]
HA#[4]
HA#[3]
CPUAVDD
CPUAVSS
630ST
SDAVSS
SDAVDD
MD[0..63] 6,8
CSA#[5]
CSA#[4]
CSA#[3]
CSA#[2]
CSA#[1]
CSA#[0]
10X4 RP32
RAS-0 6
RAS-1 6
RAS-2 6
RAS-3 6
CSB#[5]
CSB#[4]
CSB#[3]
CSB#[2]
CSB#[1]
CSB#[0]
MA[0..14] 6
MA[14]
MA[13]
MA[12]
MA[11]
MA[10]
MA[9]
MA[8]
MA[7]
MA[6]
MA[5]
MA[4]
MA[3]
MA[2]
MA[1]
MA[0]
RP25
RP34
RP8
RP33
MAA7
MAA4
DQM[7]
DQM[6]
DQM[5]
DQM[4]
DQM[3]
DQM[2]
DQM[1]
DQM[0]
CAS-[0..7] 6
WE#
SWE- 6
SRAS#
SCAS#
SRAS- 6
SCAS- 6
SDCLK
630STDCLK 1
CKE
CKE 5
RP7
RP9
HA[3..31] 2
HD[0..63] 2
HCB1608K-121T25
R248
C138
10u/16V_B
C418
1uF_X
C417
0.01uF
R417
0
+3V
HCB1608K-121T25
R85
C144
0.01uF
C189
1uF_X
C188
10u/16V_B
R84
0
ALPHATOP CORP.
Title
SIS630ST (PART 1)
Size
C
Document Number
G725-1-4-01
Rev
1.0
Date:
Friday, July 05, 2002
Sheet
5
of
24

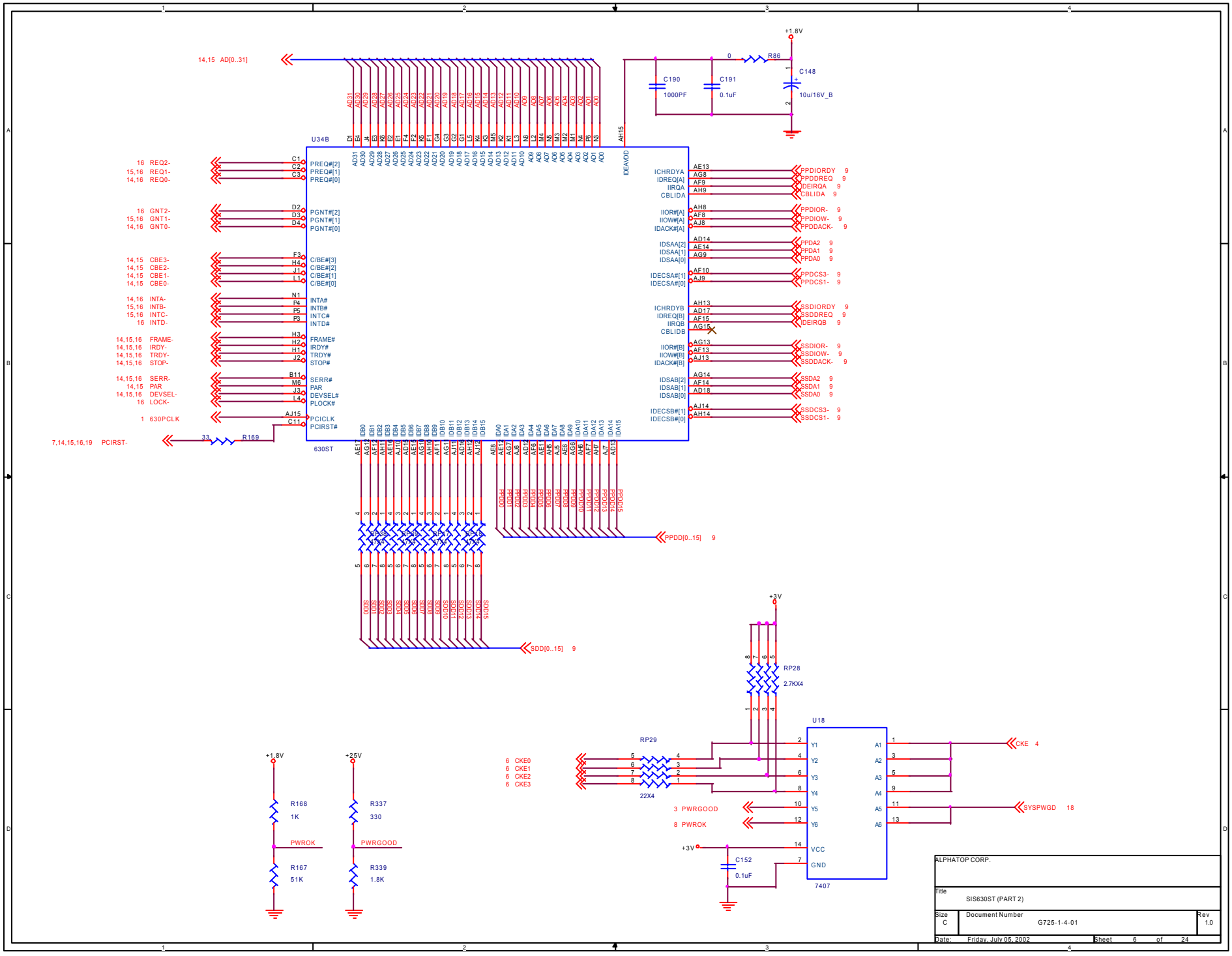

U34B
630ST
14,15 AD[0..31]
+1.8V
R86
C190
1000PF
C191
0.1uF
C148
10u/16V_B
AH15
IDEAVDD
16 REQ2-
15,16 REQ1-
14,16 REQ0-
16 GNT2-
15,16 GNT1-
14,16 GNT0-
14,15 CBE3-
14,15 CBE2-
14,15 CBE1-
14,15 CBE0-
14,16 INTA-
15,16 INTB-
15,16 INTC-
16 INTD-
14,15,16 FRAME-
14,15,16 IRDY-
14,15,16 TRDY-
14,15,16 STOP-
14,15,16 SERR-
14,15 PAR
14,15,16 DEVSEL-
16 LOCK-
1 630PCLK
7,14,15,16,19 PCIRST-
R169
PREQ#[2]
PREQ#[1]
PREQ#[0]
PGNT#[2]
PGNT#[1]
PGNT#[0]
C/BE#[3]
C/BE#[2]
C/BE#[1]
C/BE#[0]
INTA#
INTB#
INTC#
INTD#
FRAME#
IRDY#
TRDY#
STOP#
SERR#
PAR
DEVSEL#
PLOCK#
PCICLK
PCIRST#
ICHRDYA
IDREQ[A]
IIRQA
CBLIDA
IIOR#[A]
IIOW#[A]
IDACK#[A]
IDSAA[2]
IDSAA[1]
IDSAA[0]
IDECSA#[1]
IDECSA#[0]
ICHRDYB
IDREQ[B]
IIRQB
CBLIDB
IIOR#[B]
IIOW#[B]
IDACK#[B]
IDSAB[2]
IDSAB[1]
IDSAB[0]
IDECSB#[1]
IDECSB#[0]
PPDIORDY 9
PPDDREQ 9
IDEIRQA 9
CBLIDA 9
PPDIOR- 9
PPDIOW- 9
PPDDACK- 9
PPDA2 9
PPDA1 9
PPDA0 9
PPDCS3- 9
PPDCS1- 9
SSDIORDY 9
SSDDREQ 9
IDEIRQB 9
SSDIOR- 9
SSDIOW- 9
SSDDACK- 9
SSDA2 9
SSDA1 9
SSDA0 9
SSDCS3- 9
SSDCS1- 9
PPDD[0..15] 9
SDD[0..15] 9
RP38
RP39
RP47
RP48
+3V
RP28
2.7KX4
U18
7407
RP29
22X4
6 CKE0
6 CKE1
6 CKE2
6 CKE3
3 PWRGOOD
8 PWROK
CKE 4
SYSPWGD 18
C152
0.1uF
+1.8V
+25V
R168
1K
R167
51K
R337
330
R339
1.8K
PWROK
PWRGOOD
ALPHATOP CORP.
Title
SIS630ST (PART 2)
Size
C
Document Number
G725-1-4-01
Rev
1.0
Date: Friday, July 05, 2002
Sheet 6 of 24

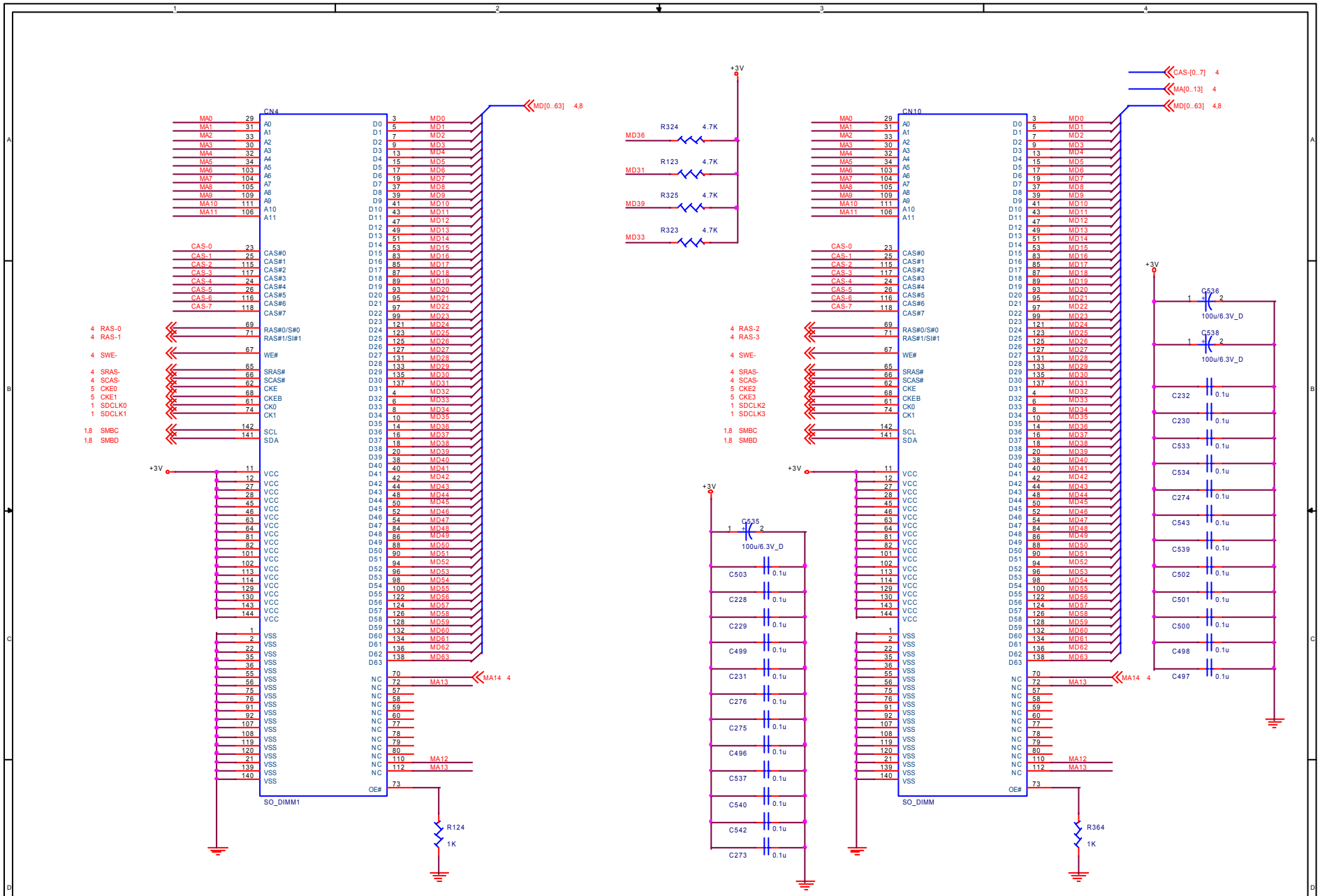

ALPHATOP CORP.	
Title	SDRAM
Size C	Document Number G725-1-4-01
Rev	1.0
Date: Friday, July 05, 2002	Sheet 7 of 24

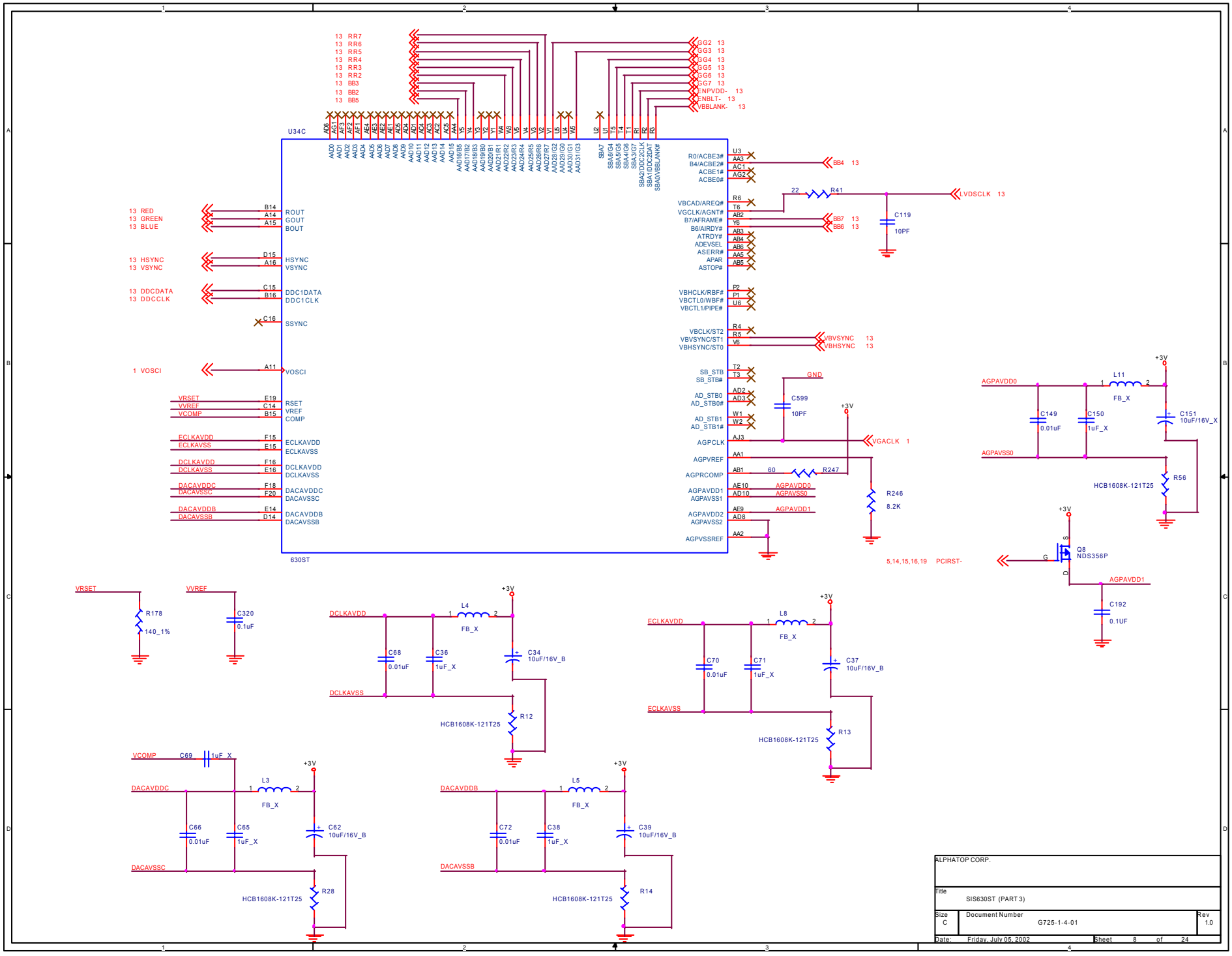
U34C
630ST
13 RR7
13 RR6
13 RR5
13 RR4
13 RR3
13 RR2
13 BB3
13 BB2
13 BB5
13 RED
13 GREEN
13 BLUE
13 HSYNC
13 VSYNC
13 DDCDATA
13 DDCCLK
1 VOSCI
VRSET
VVREF
VCOMP
ECLKAVDD
ECLKAVSS
DCLKAVDD
DCLKAVSS
DACAVDDC
DACAVSSC
DACAVDDB
DACAVSSB
ROUT
GOUT
BOUT
HSYNC
VSYNC
DDC1DATA
DDC1CLK
SSYNC
VOSCI
RSET
VREF
COMP
ECLKAVDD
ECLKAVSS
DCLKAVDD
DCLKAVSS
DACAVDDC
DACAVSSC
DACAVDDB
DACAVSSB
GG2 13
GG3 13
GG4 13
GG5 13
GG6 13
GG7 13
ENPVDD- 13
ENBLT- 13
VBBLANK- 13
BB4 13
BB7 13
BB6 13
LVDSCLK 13
VBVSYNC 13
VBHSYNC 13
VGACLK 1
GND
+3V
R41
22
C119
10PF
C599
10PF
R247
60
R246
8.2K
AGPAVDD0
AGPAVSS0
AGPAVDD1
L11
FB_X
C149
0.01uF
C150
1uF_X
C151
10uF/16V_X
R56
HCB1608K-121T25
Q8
NDS356P
5,14,15,16,19 PCIRST-
C192
0.1UF
R178
140_1%
C320
0.1uF
L4
C68
0.01uF
C36
1uF_X
C34
10uF/16V_B
R12
L8
C70
0.01uF
C71
1uF_X
C37
10uF/16V_B
R13
C69
1uF_X
L3
C66
0.01uF
C65
1uF_X
C62
10uF/16V_B
R28
L5
C72
0.01uF
C38
1uF_X
C39
10uF/16V_B
R14
ALPHATOP CORP.
Title
SIS630ST (PART 3)
Size C
Document Number G725-1-4-01
Rev 1.0
Date: Friday, July 05, 2002
Sheet 8 of 24

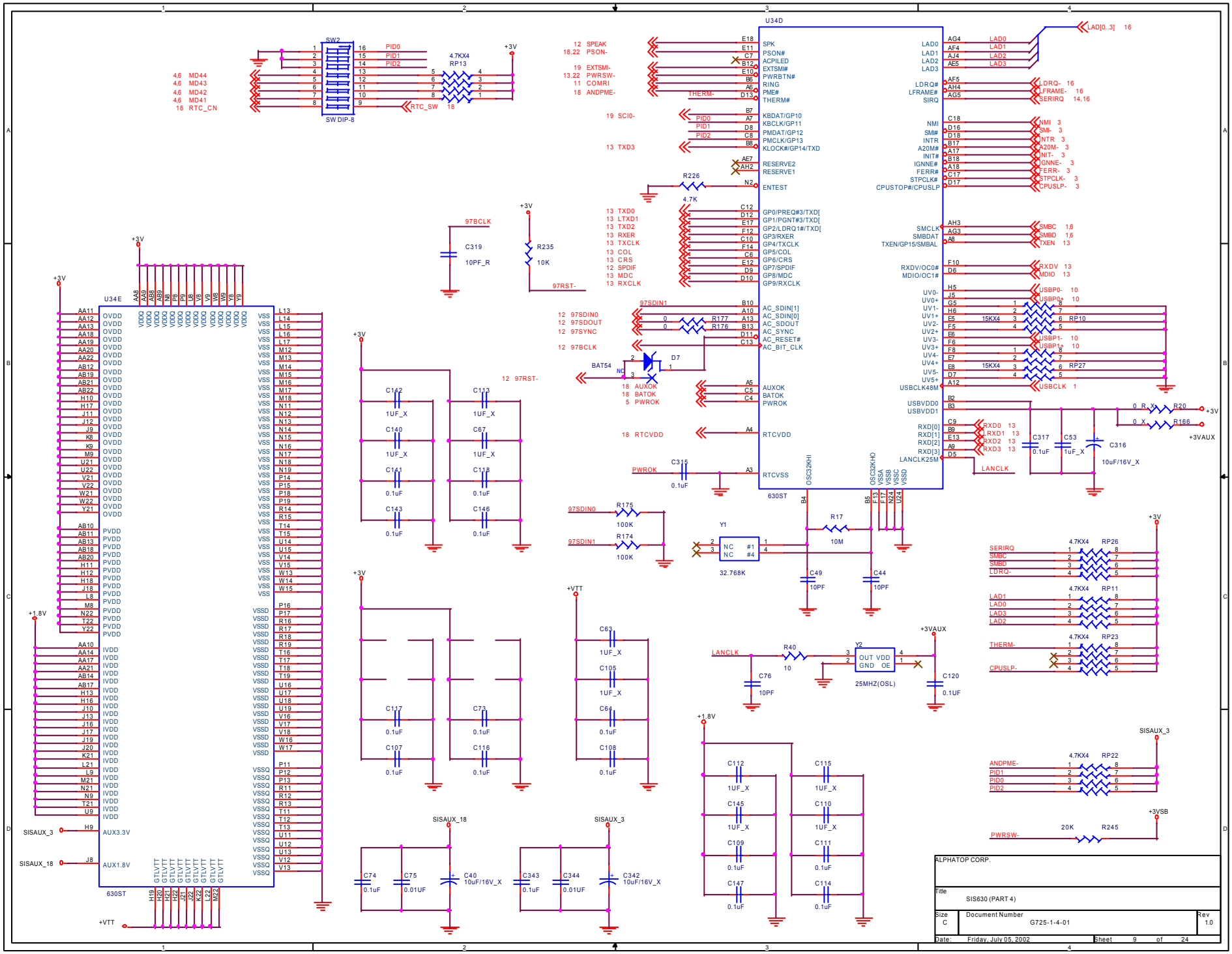
U34D
630ST
U34E
630ST
SW2
SW DIP-8
RP13
4.7KX4
R226
4.7K
R235
10K
R177
R176
D7
BAT54
Y1
32.768K
Y2
25MHZ(OSL)
R17
10M
R40
10
C315
0.1uF
C319
10PF_R
C316
10uF/16V_X
C317
0.1uF
C53
1uF_X
R20
R166
+3VAUX
+3VSB
+3V
+1.8V
+VTT
SISAUX_3
SISAUX_18
ALPHATOP CORP.
Title
SIS630 (PART 4)
Size
C
Document Number
G725-1-4-01
Rev
1.0
Date: Friday, July 05, 2002
Sheet 9 of 24

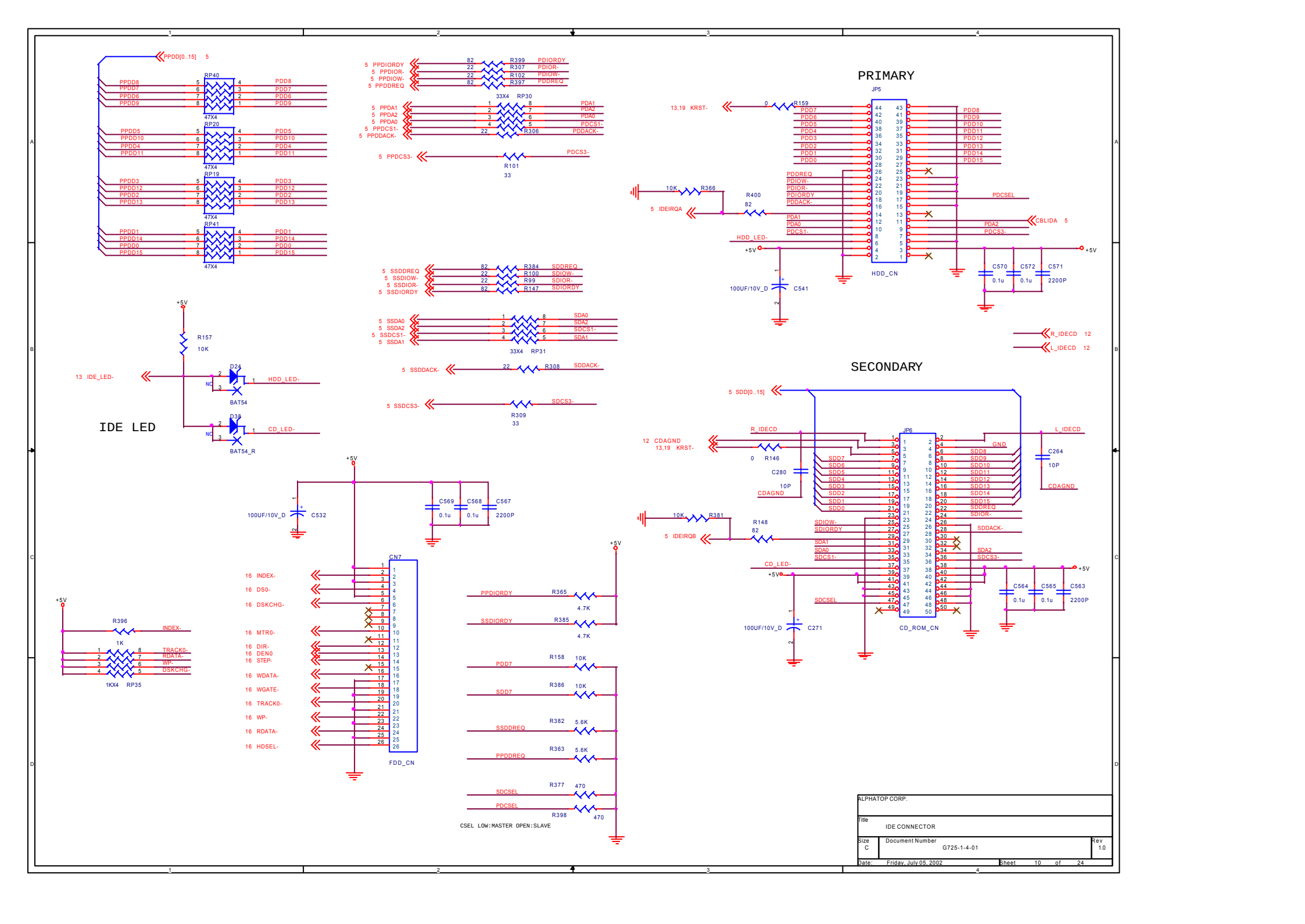
PPDD[0..15] 5
RP40
PPDD8 PPDD7 PPDD6 PPDD9
PDD8 PDD7 PDD6 PDD9
47X4
RP20
PPDD5 PPDD10 PPDD4 PPDD11
PDD5 PDD10 PDD4 PDD11
47X4
RP19
PPDD3 PPDD12 PPDD2 PPDD13
PDD3 PDD12 PDD2 PDD13
47X4
RP41
PPDD1 PPDD14 PPDD0 PPDD15
PDD1 PDD14 PDD0 PDD15
47X4
5 PPDIORDY
5 PPDIOR-
5 PPDIOW-
5 PPDDREQ
82 R399 PDIORDY
22 R307 PDIOR-
22 R102 PDIOW-
82 R397 PDDREQ
33X4 RP30
5 PPDA1
5 PPDA2
5 PPDA0
5 PPDCS1-
5 PPDDACK-
PDA1 PDA2 PDA0 PDCS1- PDDACK-
R306 22
5 PPDCS3-
PDCS3-
R101
33
5 SSDDREQ
5 SSDIOW-
5 SSDIOR-
5 SSDIORDY
82 R384 SDDREQ
22 R100 SDIOW-
22 R99 SDIOR-
82 R147 SDIORDY
5 SSDA0
5 SSDA2
5 SSDCS1-
5 SSDA1
SDA0 SDA2 SDCS1- SDA1
33X4 RP31
5 SSDDACK-
22 R308 SDDACK-
5 SSDCS3-
SDCS3-
R309
33
PRIMARY
JP5
13,19 KRST-
0 R159
PDD7 PDD6 PDD5 PDD4 PDD3 PDD2 PDD1 PDD0
PDD8 PDD9 PDD10 PDD11 PDD12 PDD13 PDD14 PDD15
PDDREQ PDIOW- PDIOR- PDIORDY PDDACK-
PDCSEL
10K R366
5 IDEIRQA
R400 82
PDA1 PDA0 PDCS1-
PDA2 PDCS3-
CBLIDA 5
HDD_LED-
+5V
100UF/10V_D C541
HDD_CN
C570 0.1u
C572 0.1u
C571 2200P
+5V
R_IDECD 12
L_IDECD 12
SECONDARY
5 SDD[0..15]
R_IDECD
12 CDAGND
13,19 KRST-
0 R146
C280 10P
CDAGND
JP6
SDD7 SDD6 SDD5 SDD4 SDD3 SDD2 SDD1 SDD0
SDD8 SDD9 SDD10 SDD11 SDD12 SDD13 SDD14 SDD15
SDDREQ SDIOR- SDDACK-
SDIOW- SDIORDY
SDA1 SDA0 SDCS1-
SDA2 SDCS3-
GND
L_IDECD
C264 10P
CDAGND
10K R381
5 IDEIRQB
R148 82
CD_LED-
+5V
SDCSEL
100UF/10V_D C271
CD_ROM_CN
C564 0.1u
C565 0.1u
C563 2200P
+5V
IDE LED
+5V
R157
10K
13 IDE_LED-
D24
NC
HDD_LED-
BAT54
D38
NC
CD_LED-
BAT54_R
+5V
100UF/10V_D C532
C569 0.1u
C568 0.1u
C567 2200P
CN7
16 INDEX-
16 DS0-
16 DSKCHG-
16 MTR0-
16 DIR-
16 DEN0
16 STEP-
16 WDATA-
16 WGATE-
16 TRACK0-
16 WP-
16 RDATA-
16 HDSEL-
FDD_CN
+5V
R396
1K
INDEX-
TRACK0-
RDATA-
WP-
DSKCHG-
1KX4 RP35
+5V
PPDIORDY R365 4.7K
SSDIORDY R385 4.7K
PDD7 R158 10K
SDD7 R386 10K
SSDDREQ R382 5.6K
PPDDREQ R363 5.6K
SDCSEL R377 470
PDCSEL R398 470
CSEL LOW:MASTER OPEN:SLAVE
ALPHATOP CORP.
Title
IDE CONNECTOR
Size C
Document Number G725-1-4-01
Rev 1.0
Date: Friday, July 05, 2002
Sheet 10 of 24

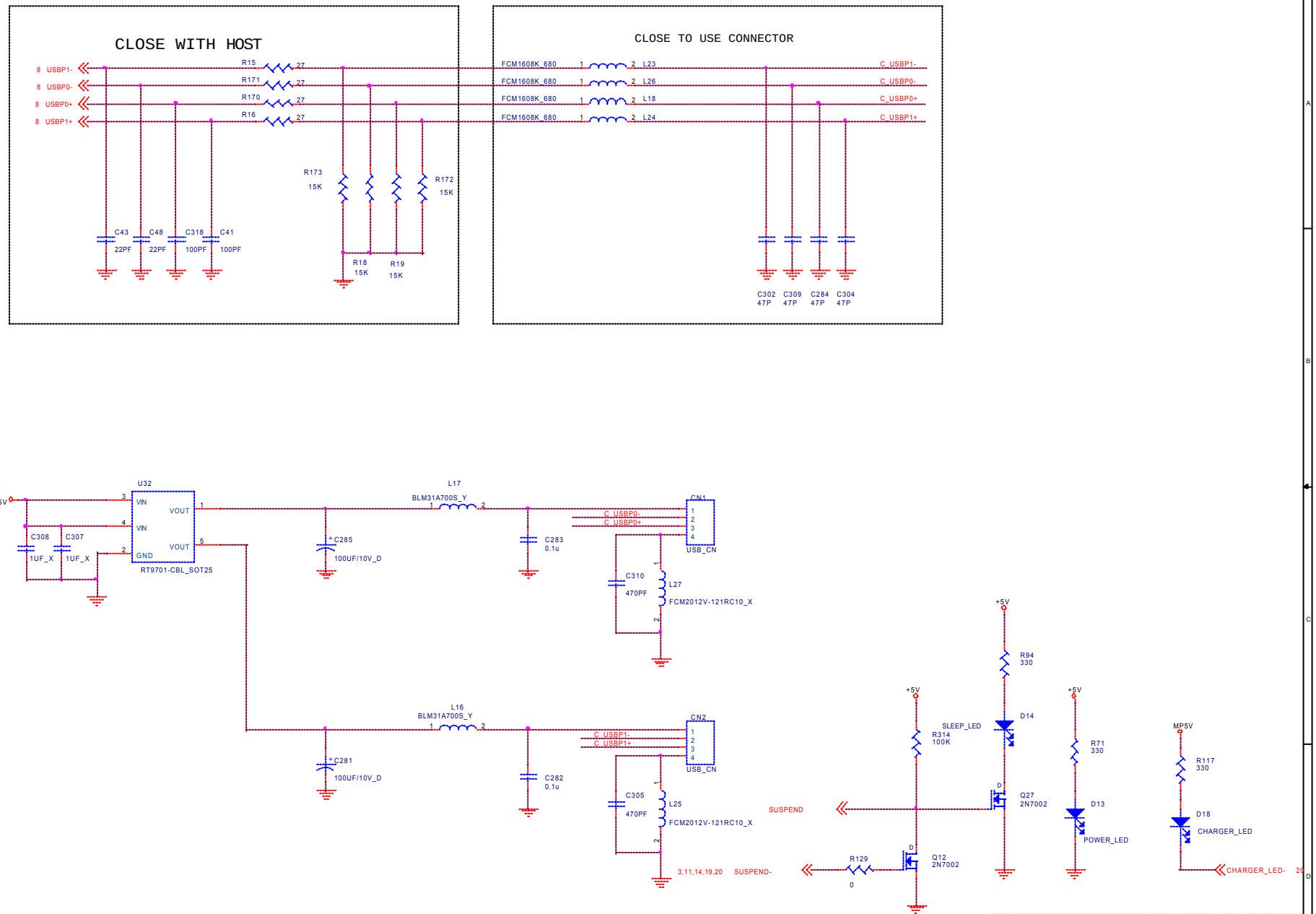
CLOSE WITH HOST
8 USBP1-
8 USBP0-
8 USBP0+
8 USBP1+
R15 27
R171 27
R170 27
R16 27
R173 15K
R172 15K
R18 15K
R19 15K
C43 22PF
C48 22PF
C318 100PF
C41 100PF
CLOSE TO USE CONNECTOR
FCM1608K_680 L23
FCM1608K_680 L26
FCM1608K_680 L18
FCM1608K_680 L24
C_USBP1-
C_USBP0-
C_USBP0+
C_USBP1+
C302 47P
C309 47P
C284 47P
C304 47P
U32
VIN
VIN
GND
VOUT
VOUT
RT9701-CBL_SOT25
+5V
C308 1UF_X
C307 1UF_X
L17
BLM31A700S_Y
C285 100UF/10V_D
C283 0.1u
CN1
USB_CN
C310 470PF
L27
FCM2012V-121RC10_X
L16
BLM31A700S_Y
C281 100UF/10V_D
C282 0.1u
CN2
USB_CN
C305 470PF
L25
FCM2012V-121RC10_X
3,11,14,19,20
SUSPEND-
SUSPEND
R94 330
R314 100K
SLEEP_LED
D14
Q27 2N7002
R129 0
Q12 2N7002
R71 330
D13
POWER_LED
MP5V
R117 330
D18
CHARGER_LED
CHARGER_LED-
ALPHATOP CORP.
Title
USB PORT & LEDS
Size C
Document Number G725-1-4-01
Rev 1.0
Date: Friday, July 05, 2002
Sheet 11 of 24

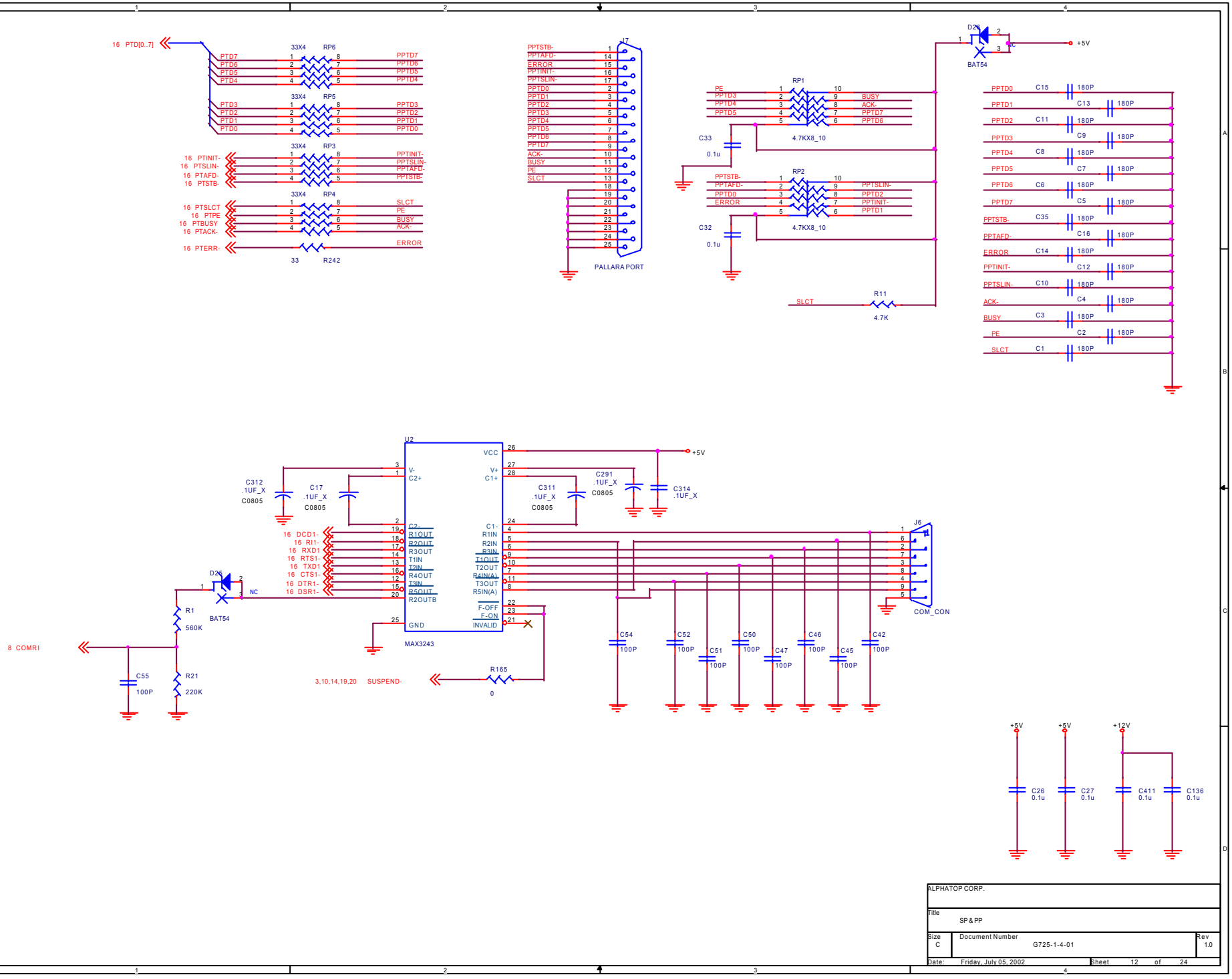

ALPHATOP CORP.		
Title: SP & PP		
Size: C	Document Number: G725-1-4-01	Rev: 1.0
Date: Friday, July 05, 2002	Sheet 12 of 24	

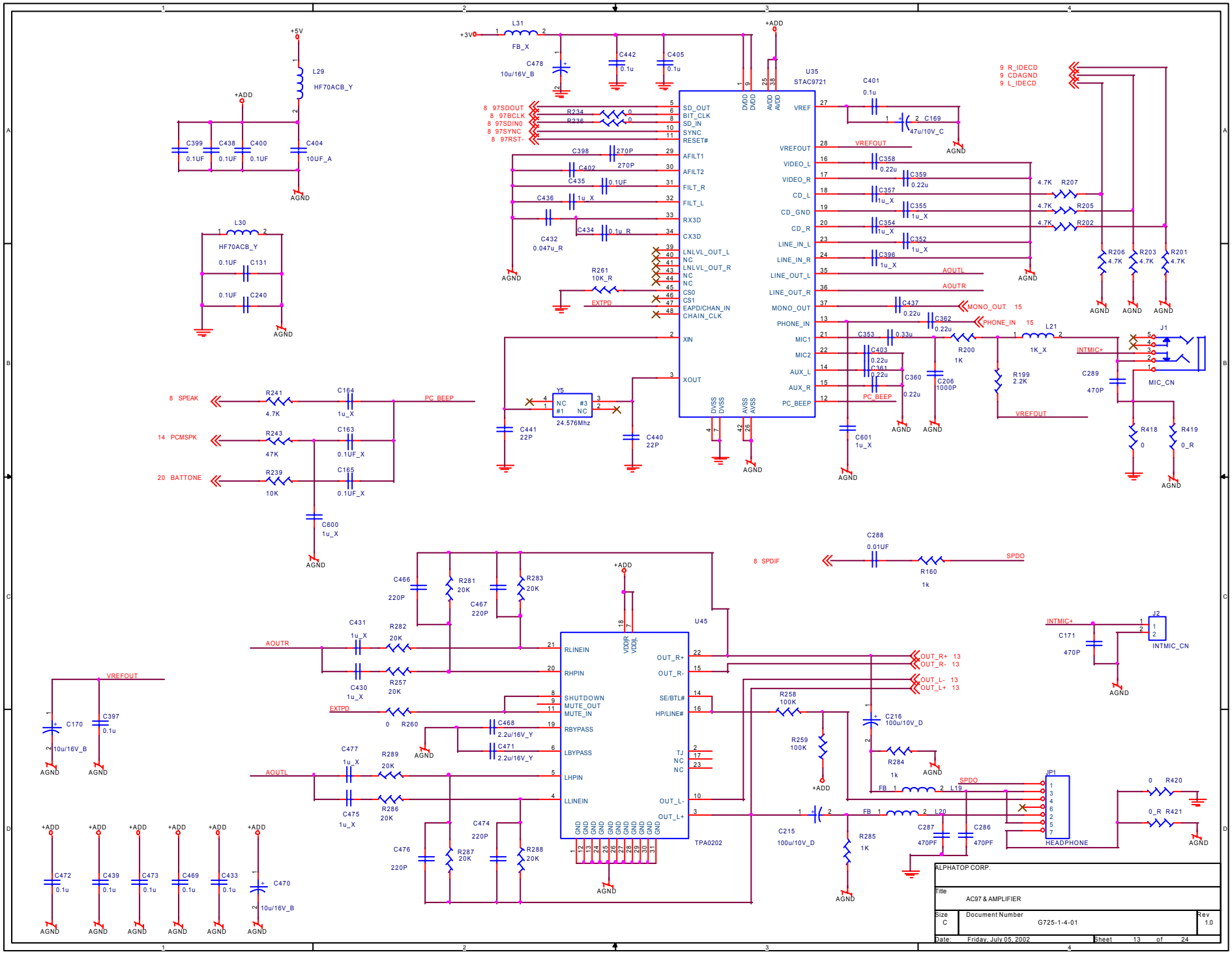
+5V
L29
HF70ACB_Y
+ADD
C399 0.1UF
C438 0.1UF
C400 0.1UF
C404 10UF_A
AGND
L30
HF70ACB_Y
0.1UF C131
0.1UF C240
AGND
+3V
L31
FB_X
C478 10u/16V_B
C442 0.1u
C405 0.1u
U35
STAC9721
8 97SDOUT
8 97BCLK
8 97SDIN0
8 97SYNC
8 97RST-
R234 0
R236 0
SD_OUT
BIT_CLK
SD_IN
SYNC
RESET#
C398 270P
C402 270P
C435 0.1UF
C436 1u_X
C432 0.047u_R
C434 0.1u_R
AFILT1
AFILT2
FILT_R
FILT_L
RX3D
CX3D
LNLVL_OUT_L
NC
LNLVL_OUT_R
NC
NC
CS0
CS1
EAPD/CHAN_IN
CHAIN_CLK
R261 10K_R
EXTPD
XIN
XOUT
Y5
NC #1
#3 NC
24.576Mhz
C441 22P
C440 22P
DVDD
AVDD
DVSS
AVSS
VREF
VREFOUT
VIDEO_L
VIDEO_R
CD_L
CD_GND
CD_R
LINE_IN_L
LINE_IN_R
LINE_OUT_L
LINE_OUT_R
MONO_OUT
PHONE_IN
MIC1
MIC2
AUX_L
AUX_R
PC_BEEP
C401 0.1u
C169 47u/10V_C
C358 0.22u
C359 0.22u
C357 1u_X
C355 1u_X
C354 1u_X
C352 1u_X
C396 1u_X
AOUTL
AOUTR
C437 0.22u
C362 0.22u
C353 0.33u
C403 0.22u
C361 0.22u
C360 0.22u
C206 1000P
C601 1u_X
R200 1K
R199 2.2K
L21 1K_X
C289 470P
J1
MIC_CN
R418 0
R419 0_R
9 R_IDECD
9 CDAGND
9 L_IDECD
4.7K R207
4.7K R205
4.7K R202
R206 4.7K
R203 4.7K
R201 4.7K
MONO_OUT 15
PHONE_IN 15
INTMIC+
8 SPEAK
14 PCMSPK
20 BATTONE
R241 4.7K
R243 47K
R239 10K
C164 1u_X
C163 0.1UF_X
C165 0.1UF_X
C600 1u_X
PC_BEEP
8 SPDIF
C288 0.01UF
R160 1k
SPDO
U45
TPA0202
RLINEIN
RHPIN
SHUTDOWN
MUTE_OUT
MUTE_IN
RBYPASS
LBYPASS
LHPIN
LLINEIN
VDDR
VDDL
OUT_R+
OUT_R-
SE/BTL#
HP/LINE#
TJ
NC
NC
OUT_L-
OUT_L+
C466 220P
C467 220P
R281 20K
R283 20K
C431 1u_X
R282 20K
C430 1u_X
R257 20K
C468 2.2u/16V_Y
C471 2.2u/16V_Y
C477 1u_X
R289 20K
C475 1u_X
R286 20K
C474 220P
C476 220P
R287 20K
R288 20K
R260 0
R258 100K
R259 100K
C216 100u/10V_D
R284 1k
C215 100u/10V_D
R285 1K
C287 470PF
C286 470PF
OUT_R+ 13
OUT_R- 13
OUT_L- 13
OUT_L+ 13
J2
INTMIC_CN
C171 470P
JP1
HEADPHONE
L19
L20
0 R420
0_R R421
C170 10u/16V_B
C397 0.1u
C472 0.1u
C439 0.1u
C473 0.1u
C469 0.1u
C433 0.1u
C470 10u/16V_B
ALPHATOP CORP.
Title
AC97 & AMPLIFIER
Size C
Document Number G725-1-4-01
Rev 1.0
Date: Friday, July 05, 2002
Sheet 13 of 24

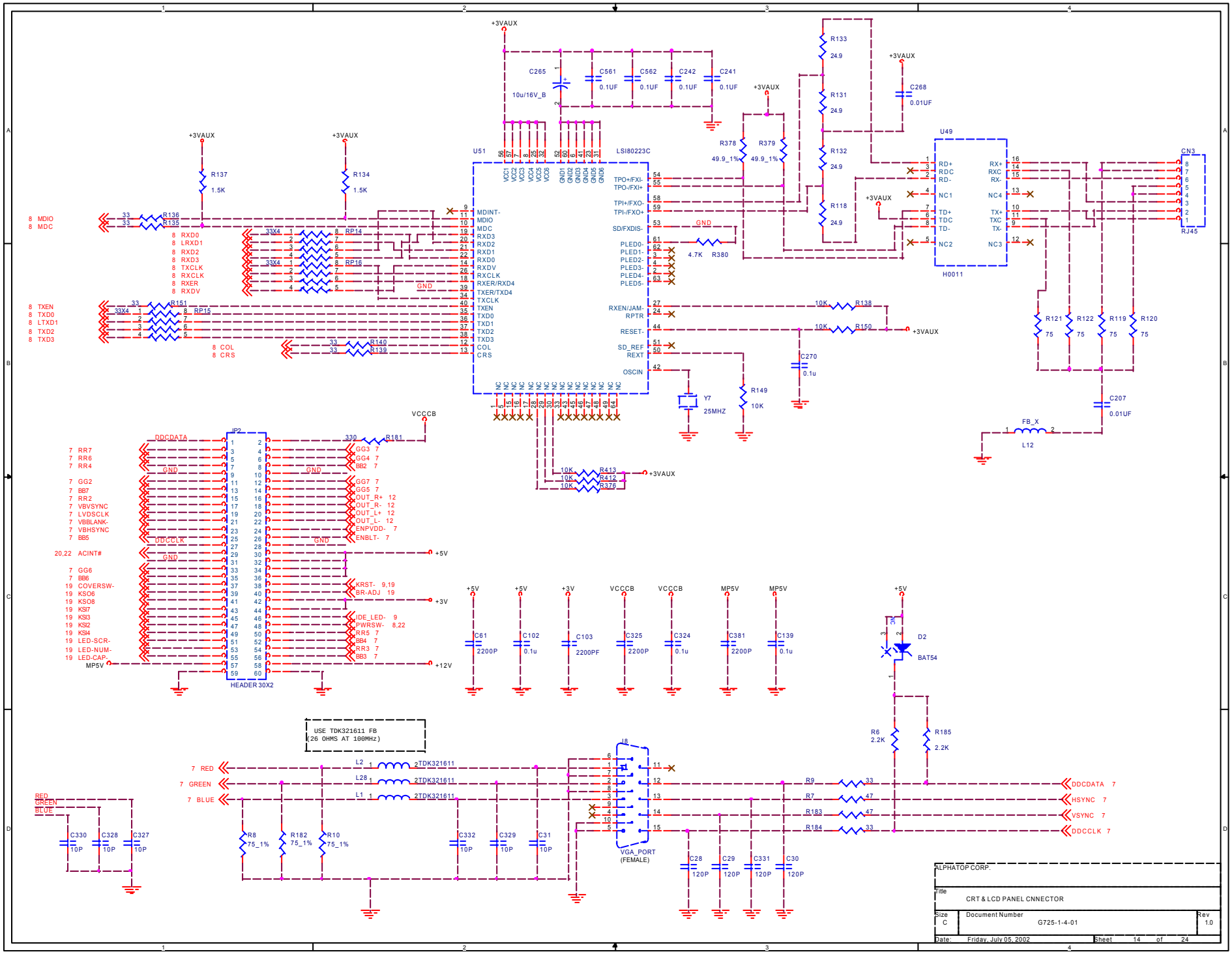
+3VAUX
C265
10u/16V_B
C561
0.1UF
C562
0.1UF
C242
0.1UF
C241
0.1UF
R133
24.9
R131
24.9
R132
24.9
R118
24.9
C268
0.01UF
R378
49.9_1%
R379
49.9_1%
U49
H0011
RD+
RD-
TD+
TD-
NC1
NC2
NC3
NC4
RX+
RX-
TX+
TX-
CN3
RJ45
U51
LSI80223C
R137
1.5K
R134
1.5K
MDIO
MDC
RXD0
LRXD1
RXD2
RXD3
TXCLK
RXCLK
RXER
RXDV
TXEN
TXD0
LTXD1
TXD2
TXD3
COL
CRS
RP14
RP16
RP15
R136
R135
R151
R140
R139
TPO+/FXI-
TPO-/FXI+
TPI+/FXO-
TPI-/FXO+
SD/FXDIS-
PLED0-
PLED1-
PLED2-
PLED3-
PLED4-
PLED5-
R380
4.7K
RXEN/JAM-RPTR
RESET-
SD_REF REXT
OSCIN
R138
10K
R150
10K
C270
0.1u
Y7
25MHZ
R149
10K
R121
75
R122
75
R119
75
R120
75
C207
0.01UF
FB_X
L12
VCCCB
JP2
HEADER 30X2
DDCDATA
DDCCLK
ACINT#
KRST-
BR-ADJ
IDE_LED-
PWRSW-
R181
330
R413
R412
R376
C61
2200P
C102
0.1u
C103
2200PF
C325
2200P
C324
0.1u
C381
2200P
C139
0.1u
D2
BAT54
R6
2.2K
R185
2.2K
USE TDK321611 FB
(26 OHMS AT 100MHz)
L2
L28
L1
2TDK321611
J8
VGA_PORT
(FEMALE)
R8
75_1%
R182
75_1%
R10
75_1%
R9
33
R7
47
R183
47
R184
33
HSYNC
VSYNC
C330
10P
C328
10P
C327
10P
C332
10P
C329
10P
C31
10P
C28
120P
C29
120P
C331
120P
C30
120P
ALPHATOP CORP.
CRT & LCD PANEL CNNECTOR
Size C
Document Number G725-1-4-01
Rev 1.0
Date: Friday, July 05, 2002
Sheet 14 of 24

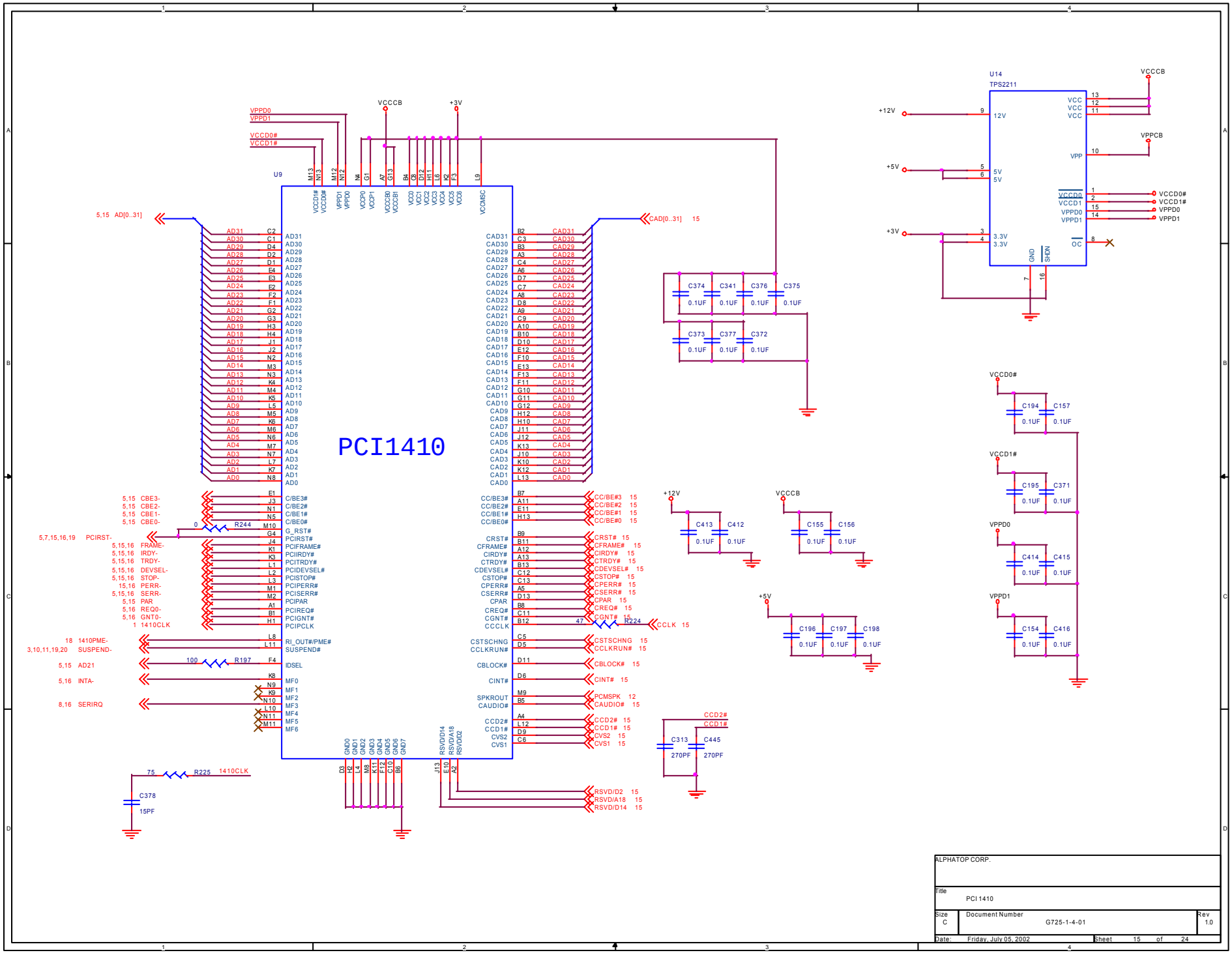

ALPHATOP CORP.			
Title: PCI 1410			
Size: C	Document Number: G725-1-4-01		Rev: 1.0
Date: Friday, July 05, 2002	Sheet 15 of 24		

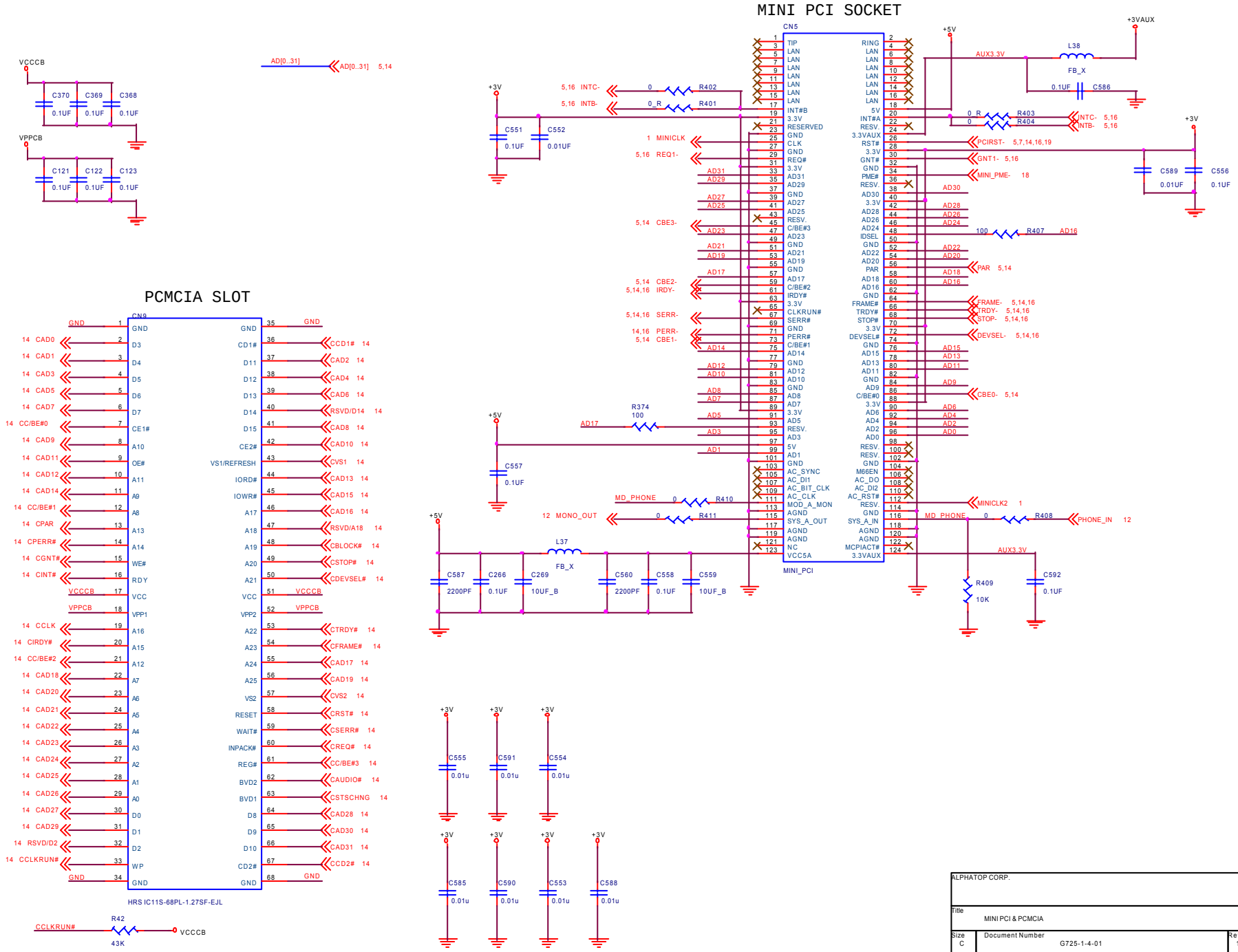
MINI PCI SOCKET
PCMCIA SLOT
CN5
MINI_PCI
CN9
HRS IC11S-68PL-1.27SF-EJL
VCCCB
VPPCB
AD[0..31]
+3V
+5V
+3VAUX
AUX3.3V
GND
ALPHATOP CORP.
Title
MINI PCI & PCMCIA
Size
C
Document Number
G725-1-4-01
Rev
1.0
Date:
Friday, July 05, 2002
Sheet
16
of
24

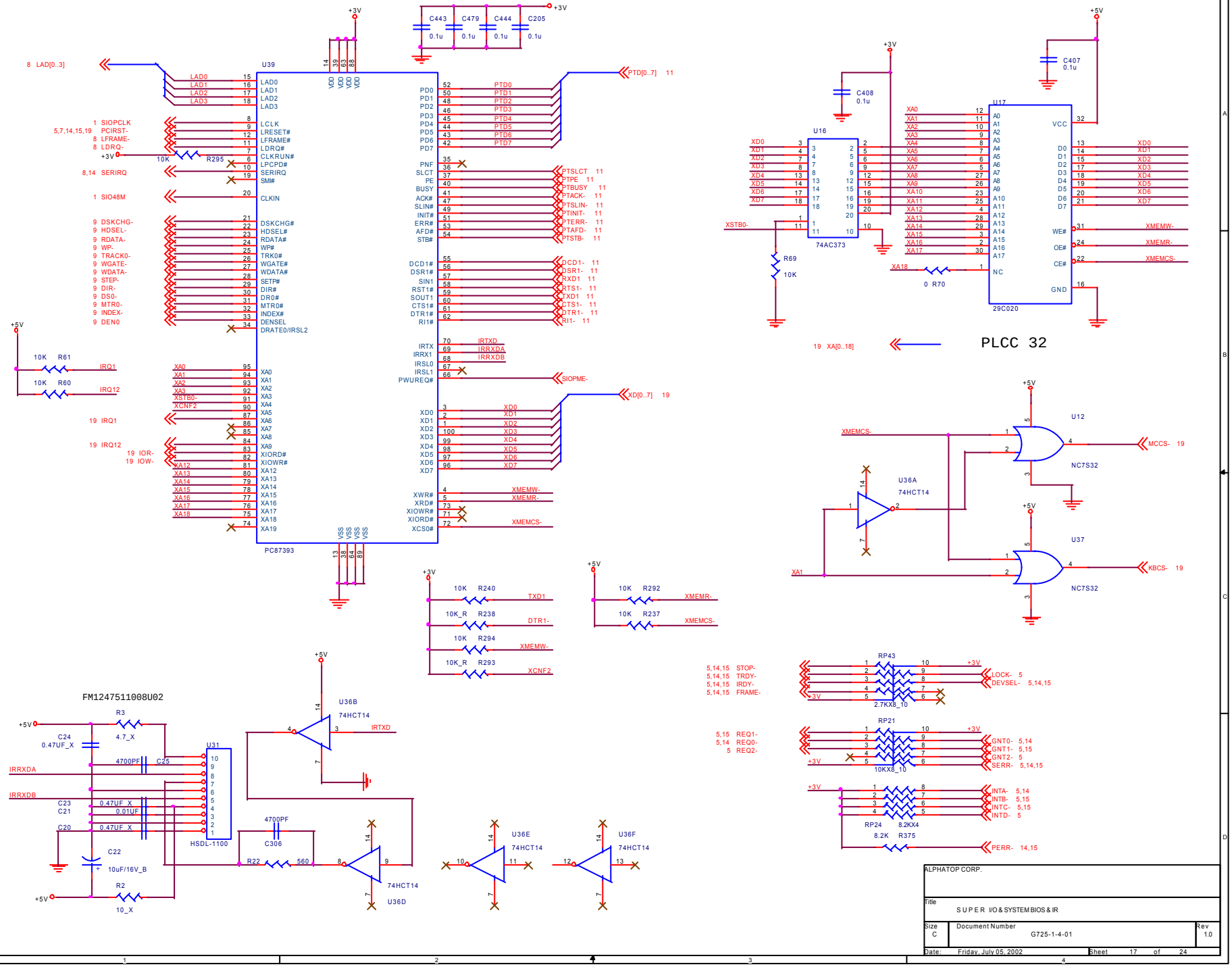
U39
PC87393
U16
74AC373
U17
29C020
PLCC 32
U12
NC7S32
U37
NC7S32
U36A
74HCT14
U36B
74HCT14
U36D
74HCT14
U36E
74HCT14
U36F
74HCT14
U31
HSDL-1100
RP43
2.7KX8_10
RP21
10KX8_10
RP24
8.2KX4
FM1247511008U02
ALPHATOP CORP.
Title
S U P E R I/O & SYSTEMBIOS & IR
Size C
Document Number G725-1-4-01
Rev 1.0
Date: Friday, July 05, 2002
Sheet 17 of 24

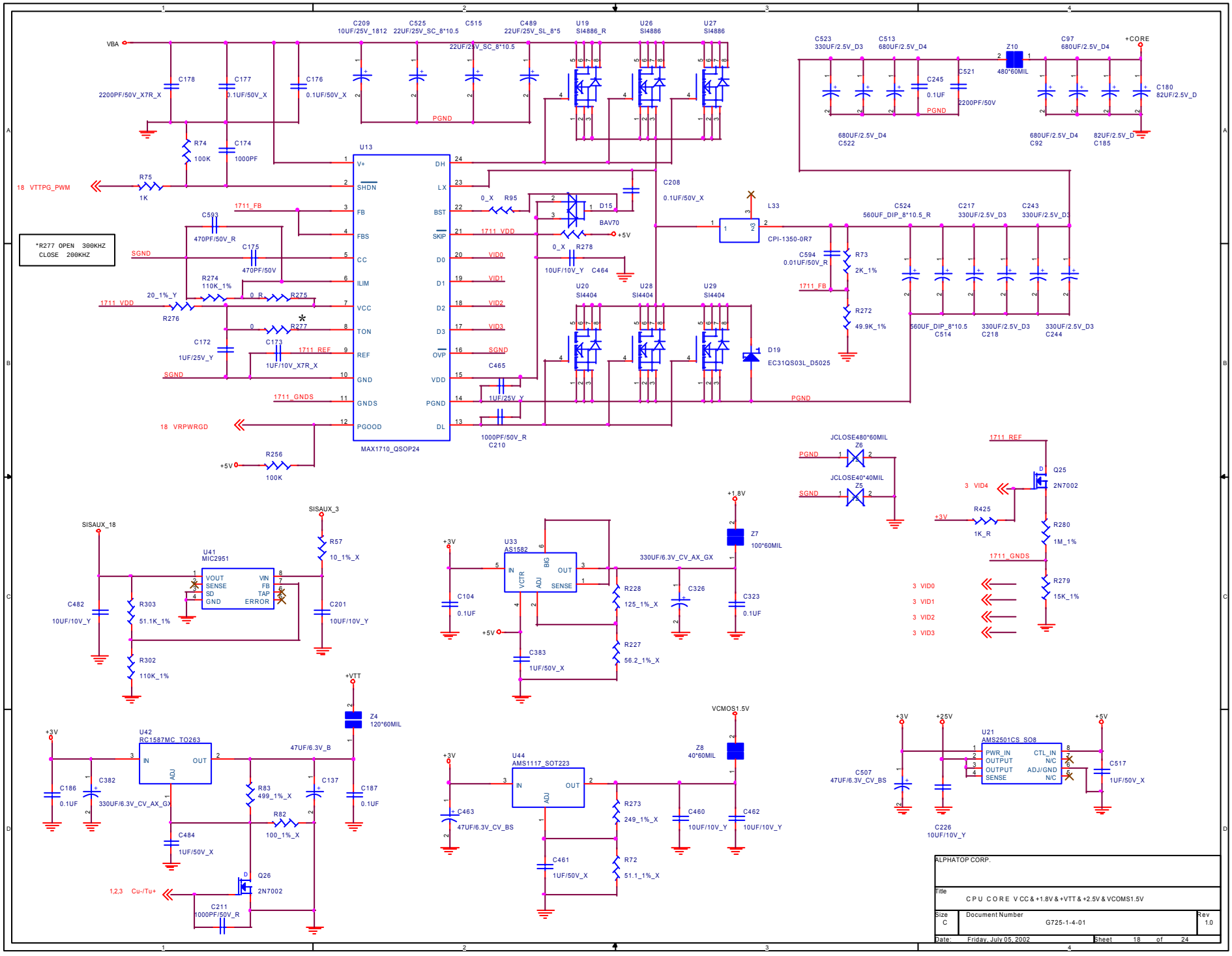
VBA
C209 10UF/25V_1812
C525 22UF/25V_SC_8*10.5
C515 22UF/25V_SC_8*10.5
C489 22UF/25V_SL_8*5
U19 SI4886_R
U26 SI4886
U27 SI4886
C178 2200PF/50V_X7R_X
C177 0.1UF/50V_X
C176 0.1UF/50V_X
PGND
U13
MAX1710_QSOP24
V+
SHDN
FB
FBS
CC
ILIM
VCC
TON
REF
GND
GNDS
PGOOD
DH
LX
BST
SKIP
D0
D1
D2
D3
OVP
VDD
PGND
DL
R74 100K
C174 1000PF
R75 1K
18 VTTPG_PWM
*R277 OPEN 300KHZ
CLOSE 200KHZ
1711_FB
SGND
C593 470PF/50V_R
C175 470PF/50V
R274 110K_1%
20_1%_Y
1711_VDD
R276
R275 0_R
R277
C172 1UF/25V_Y
C173 1UF/10V_X7R_X
1711_REF
1711_GNDS
18 VRPWRGD
R256 100K
+5V
1711_VDD
VID0
VID1
VID2
VID3
SGND
C465 1UF/25V_Y
1000PF/50V_R C210
C208 0.1UF/50V_X
0_X R95
D15 BAV70
0_X R278
10UF/10V_Y C464
U20 SI4404
U28 SI4404
U29 SI4404
D19 EC31QS03L_D5025
L33 CPI-1350-0R7
C594 0.01UF/50V_R
R73 2K_1%
R272 49.9K_1%
C524 560UF_DIP_8*10.5_R
C217 330UF/2.5V_D3
C243 330UF/2.5V_D3
560UF_DIP_8*10.5 C514
330UF/2.5V_D3 C218
330UF/2.5V_D3 C244
C523 330UF/2.5V_D3
C513 680UF/2.5V_D4
Z10 480*60MIL
C245 0.1UF
C521 2200PF/50V
680UF/2.5V_D4 C522
C97 680UF/2.5V_D4
+CORE
C180 82UF/2.5V_D
680UF/2.5V_D4 C92
82UF/2.5V_D C185
JCLOSE480*60MIL Z6
JCLOSE40*40MIL Z5
PGND
SGND
1711_REF
Q25 2N7002
3 VID4
+3V
R425 1K_R
R280 1M_1%
1711_GNDS
R279 15K_1%
3 VID0
3 VID1
3 VID2
3 VID3
SISAUX_18
SISAUX_3
U41 MIC2951
VOUT
SENSE
SD
GND
VIN
FB
TAP
ERROR
C482 10UF/10V_Y
R303 51.1K_1%
R302 110K_1%
R57 10_1%_X
C201 10UF/10V_Y
+3V
U33 AS1582
VCTR
ADJ
BIG
IN
OUT
SENSE
C104 0.1UF
+5V
C383 1UF/50V_X
R228 125_1%_X
R227 56.2_1%_X
330UF/6.3V_CV_AX_GX
C326
C323 0.1UF
+1.8V
Z7 100*60MIL
+VTT
Z4 120*60MIL
U42 RC1587MC_TO263
+3V
C186 0.1UF
C382 330UF/6.3V_CV_AX_GX
47UF/6.3V_B
R83 499_1%_X
R82 100_1%_X
C137
C187 0.1UF
C484 1UF/50V_X
1,2,3 Cu-/Tu+
Q26 2N7002
C211 1000PF/50V_R
VCMOS1.5V
Z8 40*60MIL
U44 AMS1117_SOT223
+3V
C463 47UF/6.3V_CV_BS
R273 249_1%_X
C460 10UF/10V_Y
C462 10UF/10V_Y
C461 1UF/50V_X
R72 51.1_1%_X
+3V
+25V
+5V
U21 AMS2501CS_SO8
PWR_IN
OUTPUT
OUTPUT
SENSE
CTL_IN
N/C
ADJ/GND
N/C
C507 47UF/6.3V_CV_BS
C226 10UF/10V_Y
C517 1UF/50V_X
ALPHATOP CORP.
Title
CPU CORE VCC & +1.8V & +VTT & +2.5V & VCOMS1.5V
Size C
Document Number G725-1-4-01
Rev 1.0
Date: Friday, July 05, 2002
Sheet 18 of 24

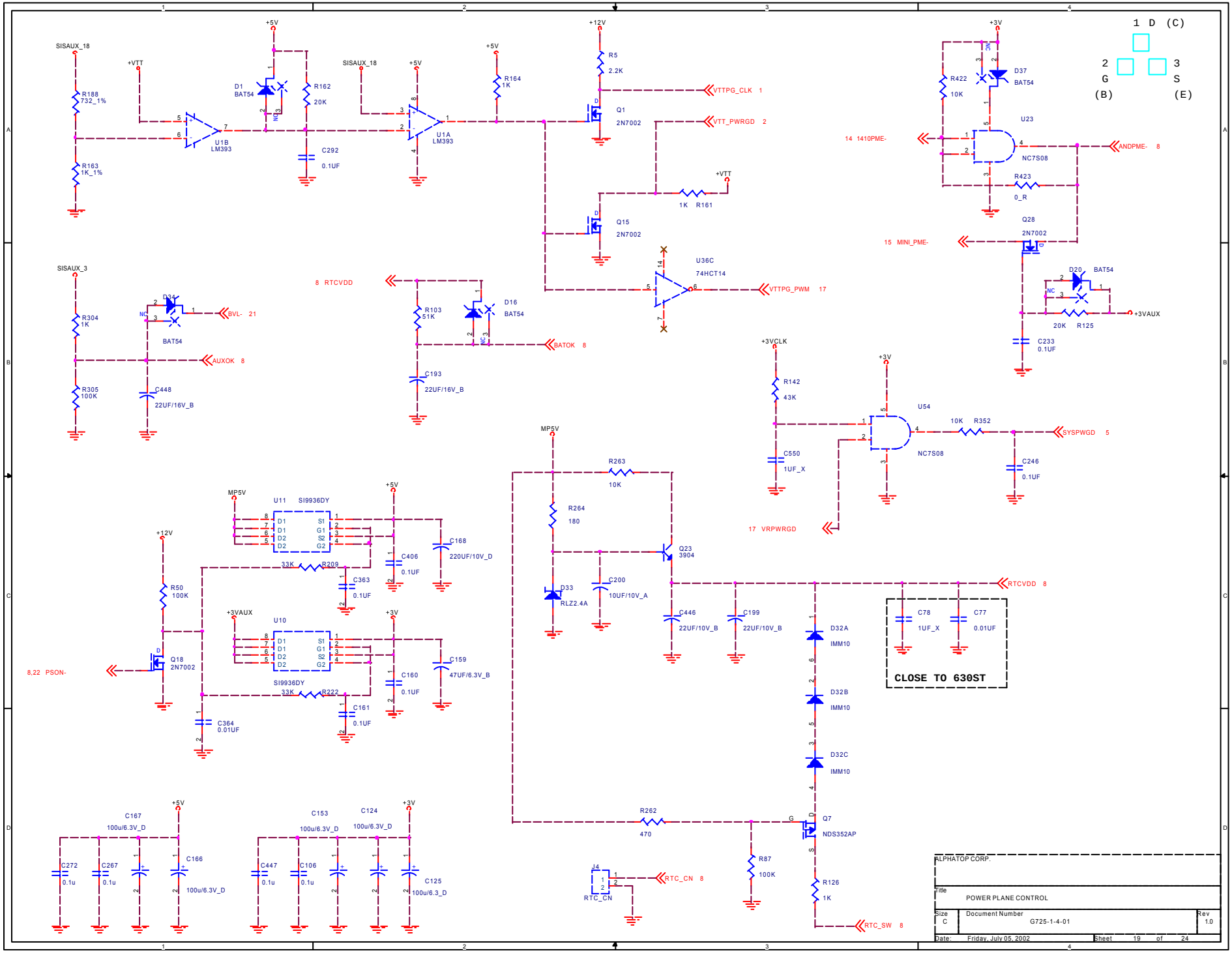
SISAUX_18
+VTT
R188 732_1%
R163 1K_1%
U1B LM393
+5V
D1 BAT54
R162 20K
C292 0.1UF
SISAUX_18
+5V
U1A LM393
+5V
R164 1K
+12V
R5 2.2K
VTTPG_CLK 1
Q1 2N7002
VTT_PWRGD 2
+VTT
1K R161
Q15 2N7002
U36C 74HCT14
VTTPG_PWM 17
+3V
R422 10K
D37 BAT54
U23
14 1410PME-
NC7S08
ANDPME- 8
R423 0_R
Q28 2N7002
15 MINI_PME-
D20 BAT54
+3VAUX
20K R125
C233 0.1UF
SISAUX_3
R304 1K
D34 BAT54
BVL- 21
AUXOK 8
R305 100K
C448 22UF/16V_B
8 RTCVDD
R103 51K
D16 BAT54
BATOK 8
C193 22UF/16V_B
+3VCLK
R142 43K
C550 1UF_X
+3V
U54
NC7S08
10K R352
SYSPWGD 5
C246 0.1UF
17 VRPWRGD
MP5V
R263 10K
R264 180
Q23 3904
D33 RLZ2.4A
C200 10UF/10V_A
C446 22UF/10V_B
C199 22UF/10V_B
RTCVDD 8
C78 1UF_X
C77 0.01UF
CLOSE TO 630ST
D32A IMM10
D32B IMM10
D32C IMM10
MP5V
U11 SI9936DY
+5V
C168 220UF/10V_D
C406 0.1UF
33K R209
C363 0.1UF
+12V
R50 100K
8,22 PSON-
Q18 2N7002
+3VAUX
U10
SI9936DY
+3V
C159 47UF/6.3V_B
C160 0.1UF
33K R222
C161 0.1UF
C364 0.01UF
R262 470
Q7 NDS352AP
R87 100K
R126 1K
J4
RTC_CN
RTC_CN 8
RTC_SW 8
+5V
C167 100u/6.3V_D
C272 0.1u
C267 0.1u
C166 100u/6.3V_D
C153 100u/6.3V_D
C124 100u/6.3V_D
+3V
C447 0.1u
C106 0.1u
C125 100u/6.3_D
1 D (C)
2 G (B)
3 S (E)
ALPHATOP CORP.
Title
POWER PLANE CONTROL
Size C
Document Number G725-1-4-01
Rev 1.0
Date: Friday, July 05, 2002
Sheet 19 of 24

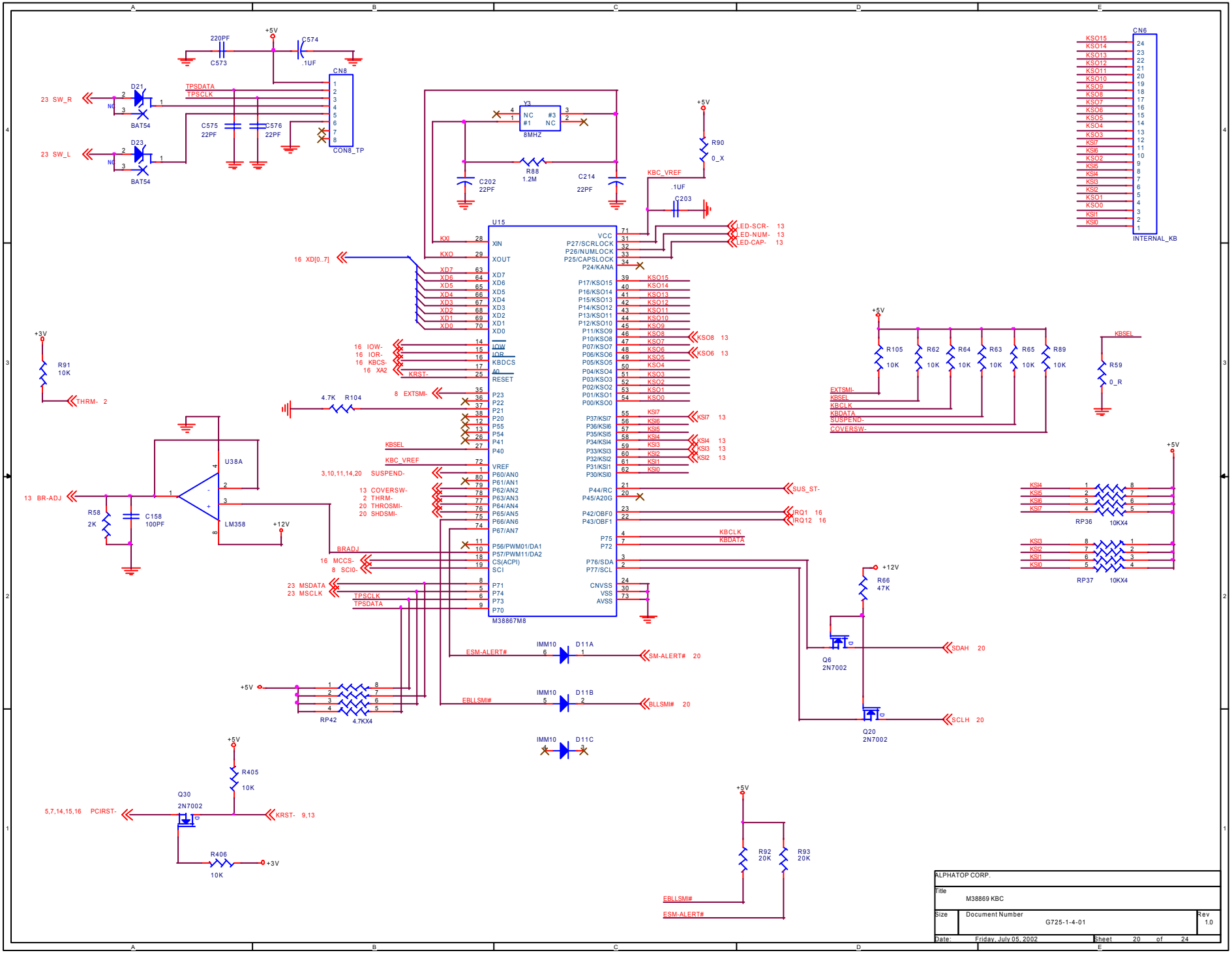
U15
M38867M8
U38A
LM358
CN8
CN8_TP
CN6
INTERNAL_KB
Y3
8MHZ
D21
D23
BAT54
Q30
2N7002
Q6
2N7002
Q20
2N7002
RP36
RP37
RP42
10KX4
4.7KX4
D11A
D11B
D11C
IMM10
ALPHATOP CORP.
Title
M38869 KBC
Size
Document Number
G725-1-4-01
Rev
1.0
Date:
Friday, July 05, 2002
Sheet
20
of
24

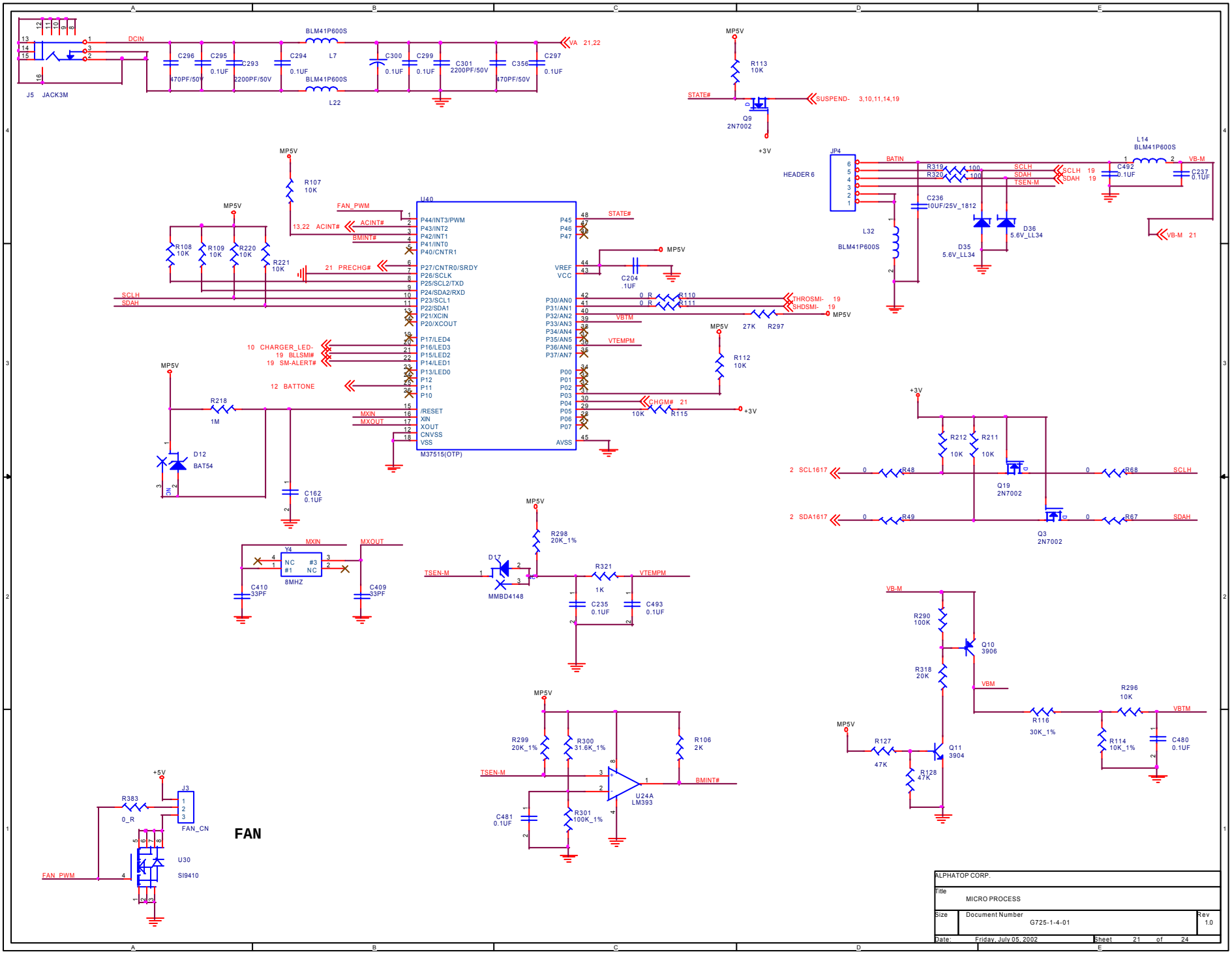

ALPHATOP CORP.		
Title: MICRO PROCESS		
Size	Document Number: G725-1-4-01	Rev: 1.0
Date: Friday, July 05, 2002	Sheet 21 of 24	

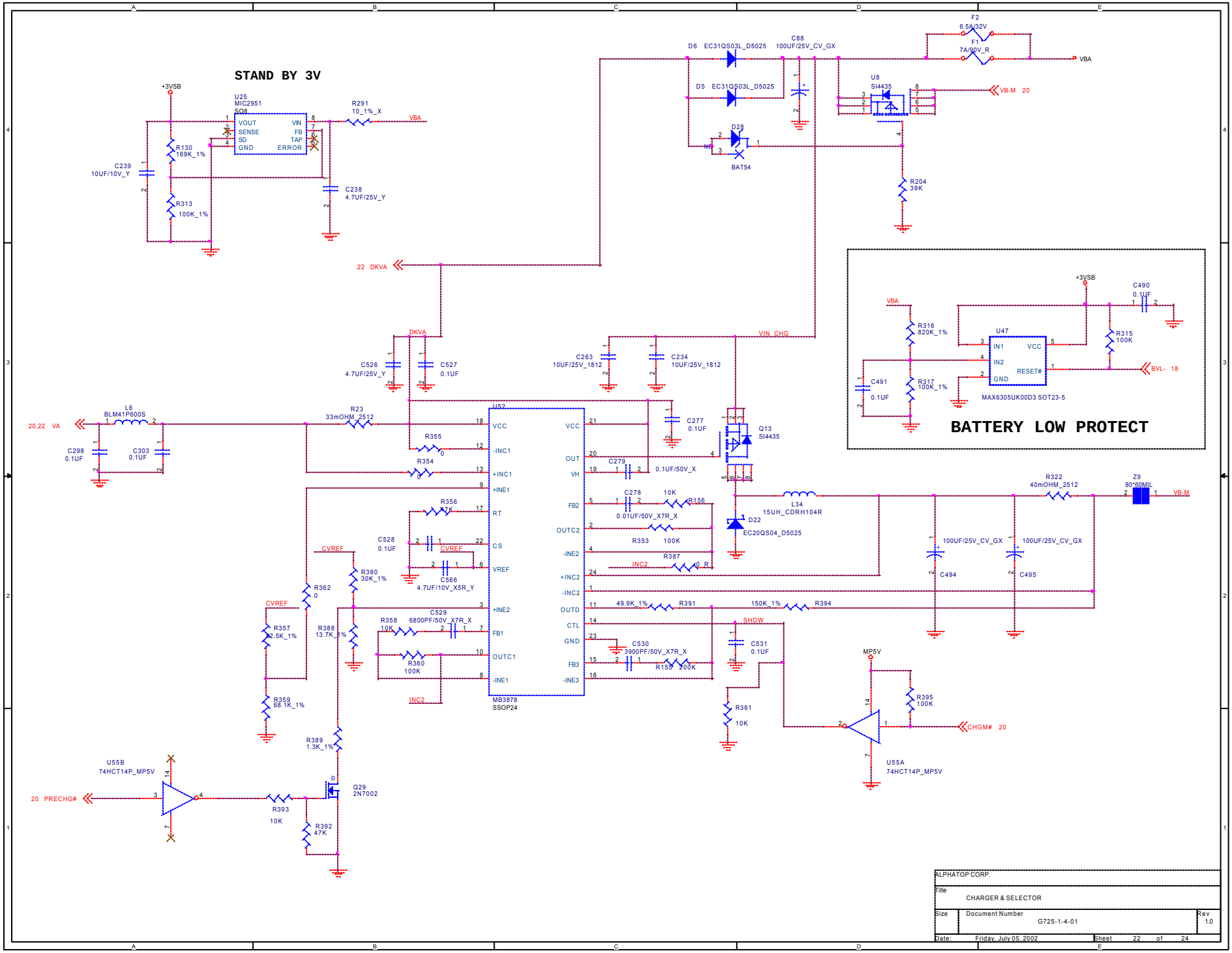
STAND BY 3V
+3VSB
U25
MIC2951
SO8
VOUT
SENSE
SD
GND
VIN
FB
TAP
ERROR
R130
169K_1%
R313
100K_1%
C239
10UF/10V_Y
C238
4.7UF/25V_Y
R291
10_1%_X
VBA
D6 EC31QS03L_D5025
D5 EC31QS03L_D5025
C88
100UF/25V_CV_GX
F2
6.5A/32V
F1
7A/90V_R
VBA
U8
SI4435
VB-M 20
D28
BAT54
R204
39K
22 DKVA
DKVA
C526
4.7UF/25V_Y
C527
0.1UF
C263
10UF/25V_1812
C234
10UF/25V_1812
VIN_CHG
L6
BLM41P600S
20,22 VA
C298
0.1UF
C303
0.1UF
R23
33mOHM_2512
U52
VCC
-INC1
+INC1
+INE1
RT
CS
VREF
+INE2
FB1
OUTC1
-INE1
MB3878
SSOP24
R355
0
R354
0
R356
47K
C528
0.1UF
CVREF
C566
4.7UF/10V_X5R_Y
R362
0
R390
30K_1%
R357
82.5K_1%
R388
13.7K_1%
R359
68.1K_1%
R389
1.3K_1%
C529
6800PF/50V_X7R_X
R358
10K
R360
100K
INC2
VCC
OUT
VH
FB2
OUTC2
-INE2
+INC2
-INC2
OUTD
CTL
GND
FB3
-INE3
C277
0.1UF
C279
0.1UF/50V_X
C278
0.01UF/50V_X7R_X
10K
R156
R353
100K
R387
0_R
INC2
49.9K_1%
R391
150K_1%
R394
SHDW
C530
3900PF/50V_X7R_X
R159
200K
C531
0.1UF
R361
10K
Q13
SI4435
L34
15UH_CDRH104R
D22
EC20QS04_D5025
R322
40mOHM_2512
Z9
80*80MIL
VB-M
100UF/25V_CV_GX
C494
100UF/25V_CV_GX
C495
MP5V
R395
100K
CHGM# 20
U55A
74HCT14P_MP5V
U55B
74HCT14P_MP5V
20 PRECHG#
R393
10K
Q29
2N7002
R392
47K
+3VSB
C490
0.1UF
VBA
R316
820K_1%
U47
IN1
IN2
GND
VCC
RESET#
R315
100K
BVL- 18
C491
0.1UF
R317
100K_1%
MAX6305UK00D3 SOT23-5
BATTERY LOW PROTECT
ALPHATOP CORP.
Title
CHARGER & SELECTOR
Size
Document Number
G725-1-4-01
Rev
1.0
Date: Friday, July 05, 2002
Sheet 22 of 24

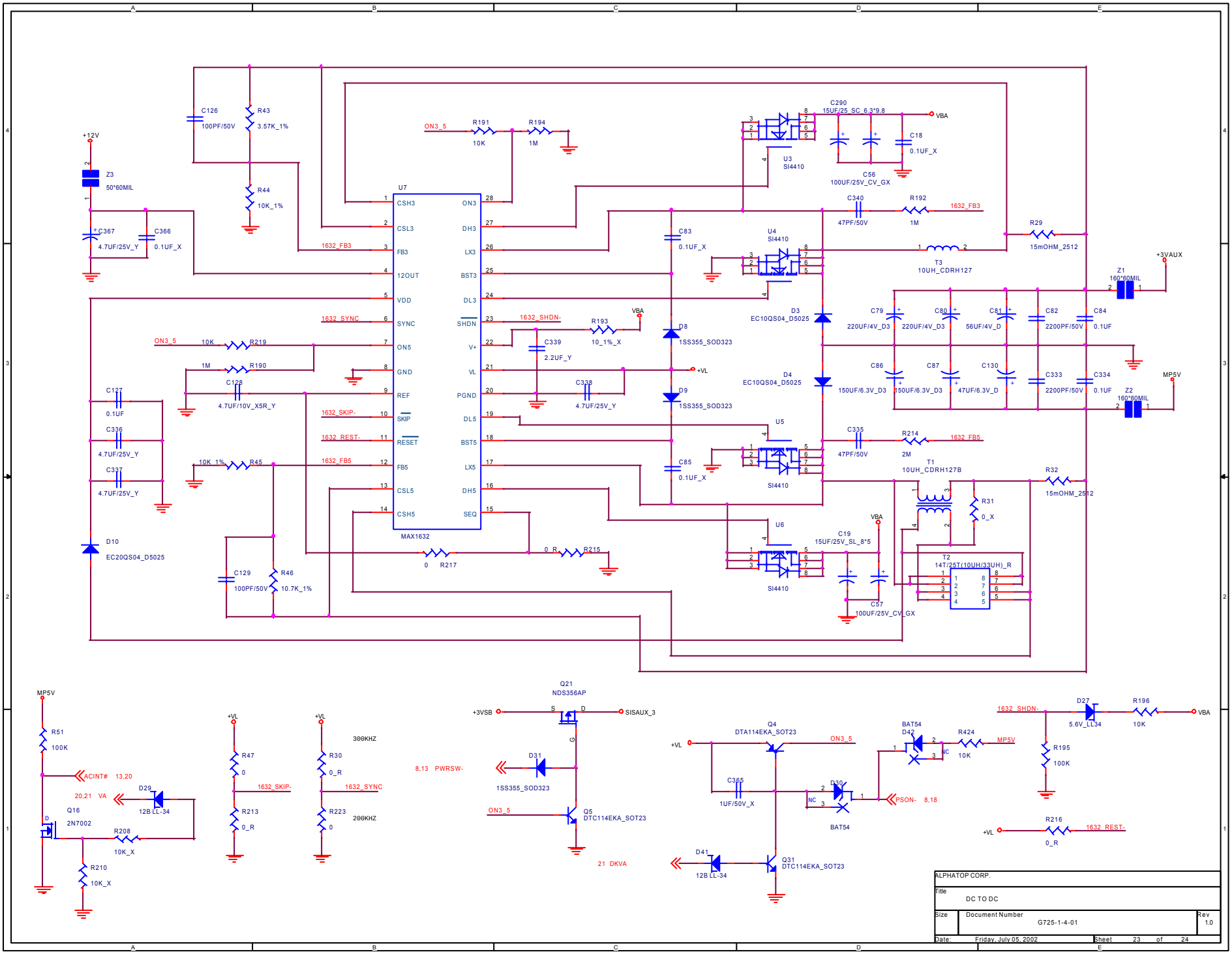
+12V
Z3
50*60MIL
C126
100PF/50V
R43
3.57K_1%
R44
10K_1%
C367
4.7UF/25V_Y
C366
0.1UF_X
U7
MAX1632
CSH3
CSL3
FB3
12OUT
VDD
SYNC
ON5
GND
REF
SKIP
RESET
FB5
CSL5
CSH5
ON3
DH3
LX3
BST3
DL3
SHDN
V+
VL
PGND
DL5
BST5
LX5
DH5
SEQ
1632_FB3
1632_SYNC
1632_SHDN-
1632_SKIP-
1632_REST-
1632_FB5
ON3_5
R191
10K
R194
1M
R219
10K
R190
1M
C128
4.7UF/10V_X5R_Y
C127
0.1UF
C336
4.7UF/25V_Y
C337
4.7UF/25V_Y
R45
10K_1%
D10
EC20QS04_D5025
C129
100PF/50V
R46
10.7K_1%
R217
0
R215
0_R
R193
10_1%_X
C339
2.2UF_Y
C338
4.7UF/25V_Y
VBA
+VL
D8
1SS355_SOD323
D9
1SS355_SOD323
C290
15UF/25_SC_6.3*9.8
C18
0.1UF_X
C56
100UF/25V_CV_GX
U3
SI4410
U4
SI4410
U5
SI4410
U6
SI4410
C83
0.1UF_X
C85
0.1UF_X
C340
47PF/50V
R192
1M
T3
10UH_CDRH127
R29
15mOHM_2512
D3
EC10QS04_D5025
D4
EC10QS04_D5025
C79
220UF/4V_D3
C80
220UF/4V_D3
C81
56UF/4V_D
C82
2200PF/50V
C84
0.1UF
C86
150UF/6.3V_D3
C87
150UF/6.3V_D3
C130
47UF/6.3V_D
C333
2200PF/50V
C334
0.1UF
+3VAUX
Z1
160*60MIL
MP5V
Z2
160*60MIL
C335
47PF/50V
R214
2M
T1
10UH_CDRH127B
R32
15mOHM_2512
R31
0_X
C19
15UF/25V_SL_8*5
C57
100UF/25V_CV_GX
T2
14T/25T(10UH/33UH)_R
MP5V
R51
100K
ACINT# 13,20
20,21 VA
D29
12B LL-34
Q16
2N7002
R208
10K_X
R210
10K_X
+VL
R47
0
1632_SKIP-
R213
0_R
300KHZ
R30
0_R
1632_SYNC
R223
200KHZ
0
8,13 PWRSW-
Q21
NDS356AP
+3VSB
SISAUX_3
D31
1SS355_SOD323
ON3_5
Q5
DTC114EKA_SOT23
21 DKVA
Q4
DTA114EKA_SOT23
ON3_5
C365
1UF/50V_X
BAT54
D42
R424
10K
MP5V
D30
BAT54
PSON- 8,18
D41
12B LL-34
Q31
DTC114EKA_SOT23
1632_SHDN-
D27
5.6V_LL34
R196
10K
VBA
R195
100K
+VL
R216
0_R
1632_REST-
ALPHATOP CORP.
Title
DC TO DC
Size
Document Number
G725-1-4-01
Rev
1.0
Date:
Friday, July 05, 2002
Sheet
23
of
24

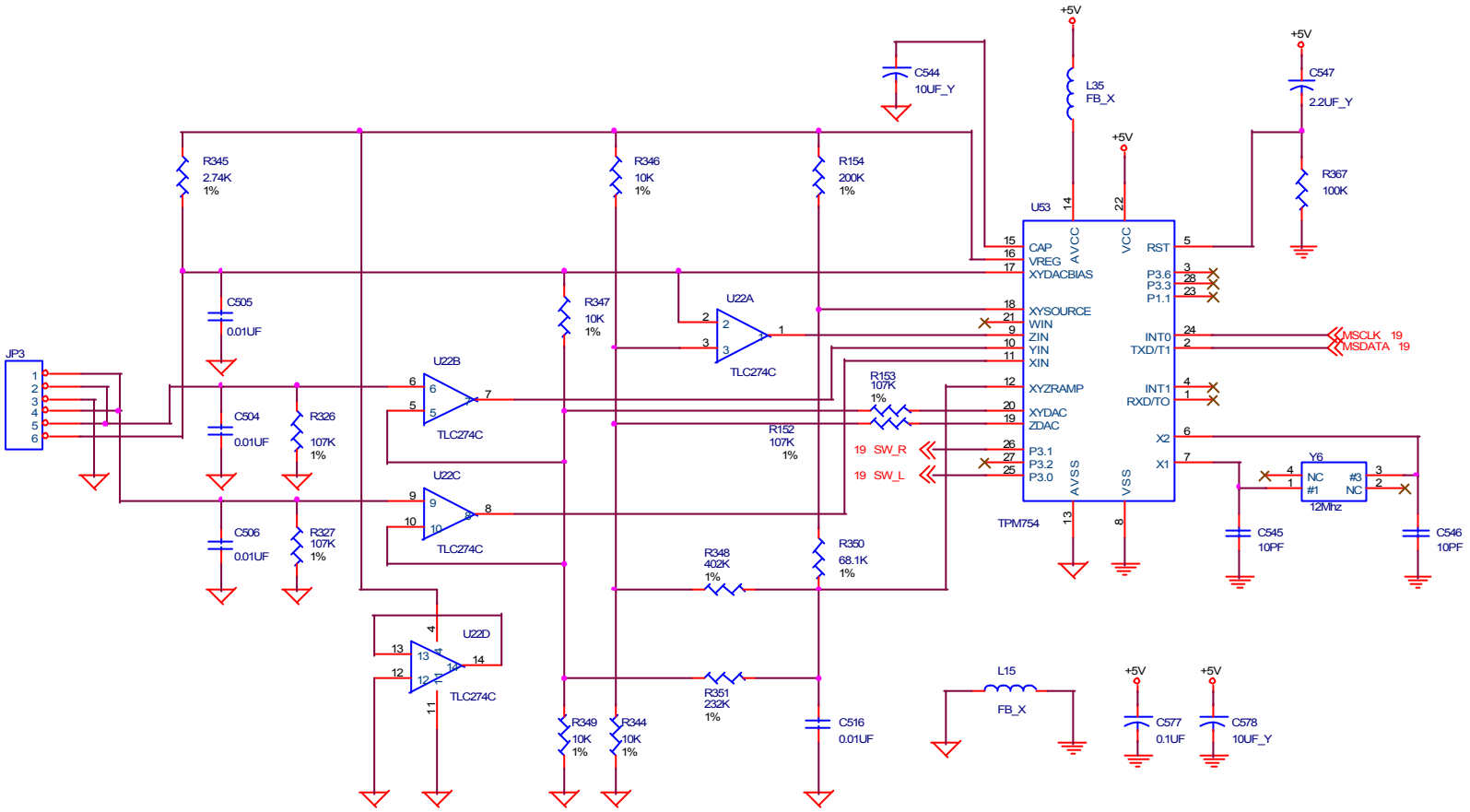

HISTORY:

REV 1.0 : Initial

ALPHATOP CORP.		
Title: STICK POINT & HISTORY		
Size: B	Document Number: G725-1-4-01	Rev: 1.0
Date: Friday, July 05, 2002	Sheet 24 of 24	